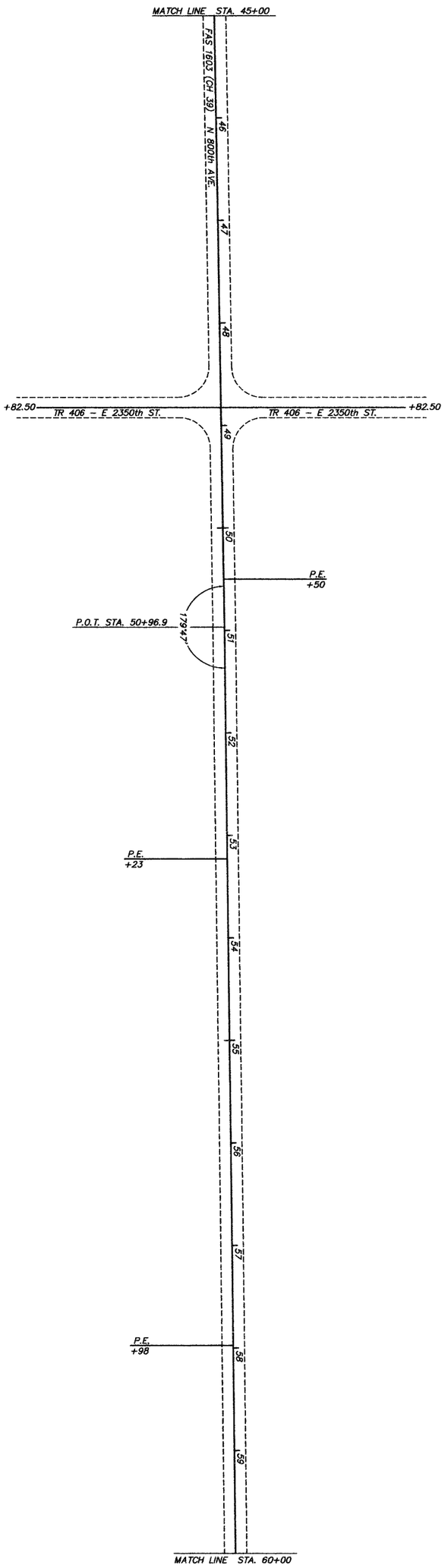

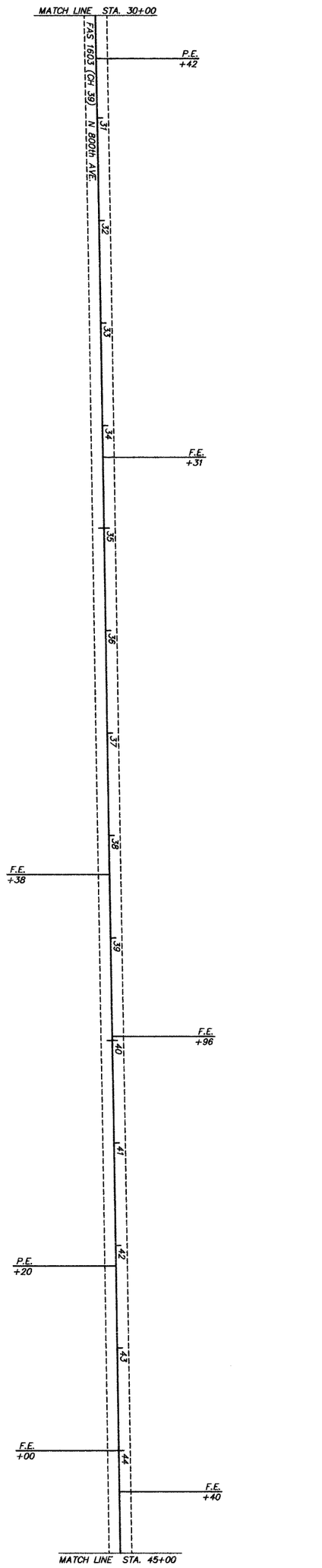

GRAPHIC SCALE IN FEET

50 0 50 100

COUNTY	ROUTE	SECTION	TOTAL SHEETS	SHEET NO.
ADAMS	FAS 1603	08-00205-00-RS	8	5

STATION 30+00 TO STATION 60+00

PROJECT NO. RS-1603(101)

93456