CONTRACT NO. 98984

F.A.P. RTE.	SECTION	COUNTY	TOTAL SHEETS	SHEET NO.
103	102RS-4	PERRY	13	6
STA.		TO STA.		
FED. ROAD DIST. NO.	ILLINOIS	FED. AID PROJECT		

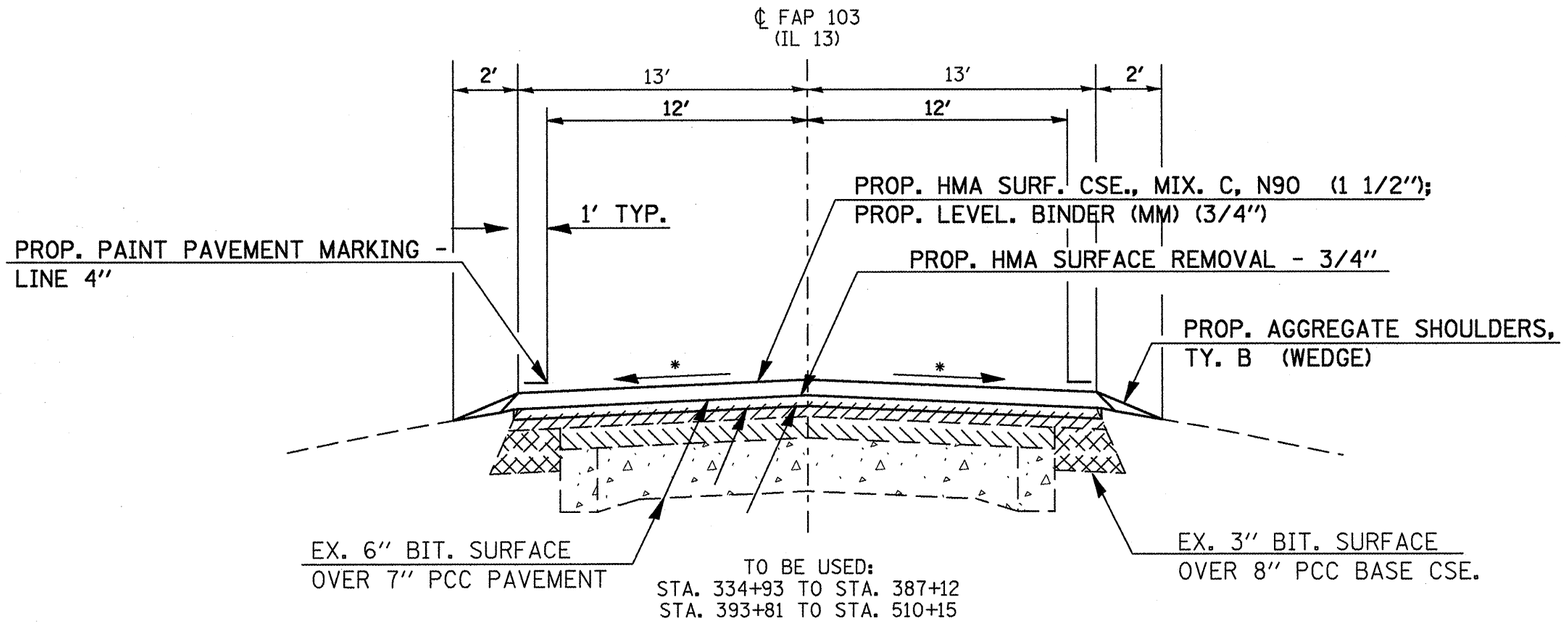

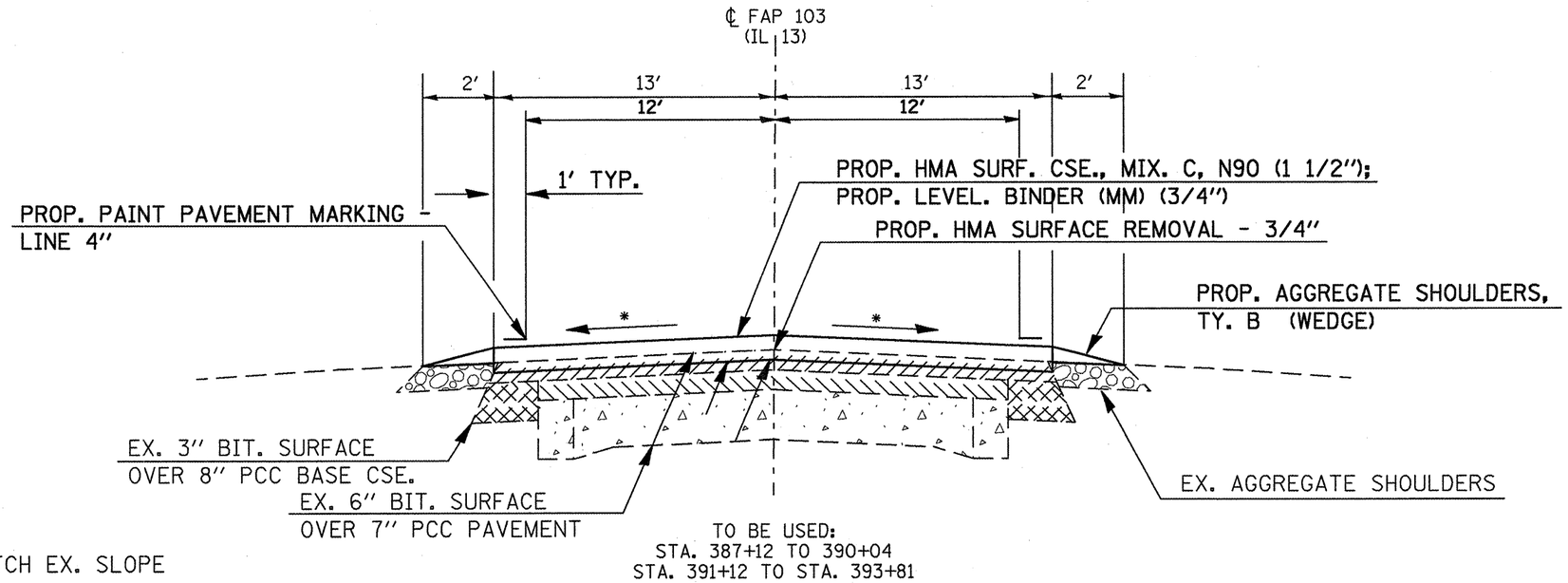

* MATCH EX. SLOPE

PLOT DATE = 3/13/2008
FILE NAME = c:\projects\d904386\d904386mm.m32
PLOT SCALE = 100.0824 ' / IN.
USER NAME = mccordic

FAP 103 (IL 13) TYPICAL SECTIONS