ROUTE NO.	SECTION	COUNTY	TOTAL SHEETS	SHEET NO.
F.A.U. 9641	05-00100 -00-FP	WILLIAMSON	53	53
ILLINOIS		FAIR STREET		

CONTRACT NO. 99309

DETAILS OF INLET SPECIAL, TYPE 7

N.T.S.

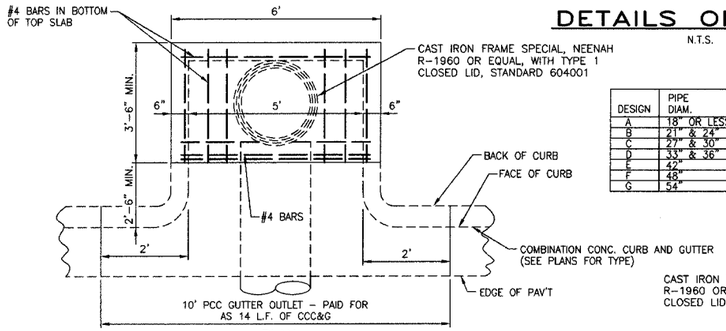

PLAN

DESIGN	PIPE DIAM.	"D"
A	18" OR LESS	2'-6"
B	21" & 24"	3'-0"
C	27" & 30"	3'-7"
D	33" & 36"	4'-2"
E	42"	4'-9"
F	48"	5'-0"
G	54"	6'-1"

NOTES:

CLASS SI CONCRETE SHALL BE USED THROUGHOUT. SET FACE OF INLET 30" BEHIND FACE OF CURB. DEPRESS GUTTER FLOWLINE AT INLET 2 1/2" BELOW NORMAL GUTTER FLOWLINE. CONSTRUCT TRANSITION IN FLOWLINE IN 10 FEET EACH SIDE OF INLET. PIPES SHALL BE CONNECTED TO INLET AS SHOWN ON STORM SEWER LAYOUT.

INLETS WILL BE PAID FOR AT THE CONTRACT UNIT PRICE EACH FOR INLET, SPECIAL NO. 7 WHICH PRICE SHALL INCLUDE THE CAST IRON FRAME, SPECIAL, TYPE 1 WITH TYPE 1 CLOSED LID, THE REINFORCEMENT BARS, METAL STEPS, AND JOINT FILLER.

**THE GALV. IRON STEPS AS DETAILED HEREON ARE TYPICAL. STEPS OF OTHER DESIGN AND MATERIAL THAT WILL CONFORM TO THE MINIMUM REQUIREMENTS OF THE STEPS SHOWN MAY BE USED WHEN APPROVED BY THE ENGINEER.

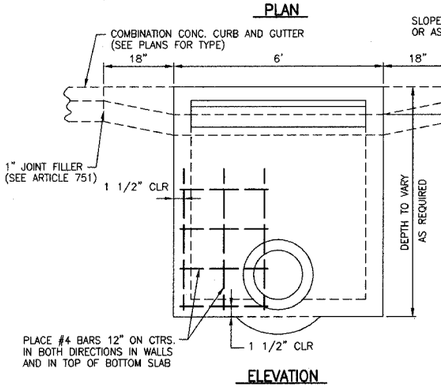

ELEVATION

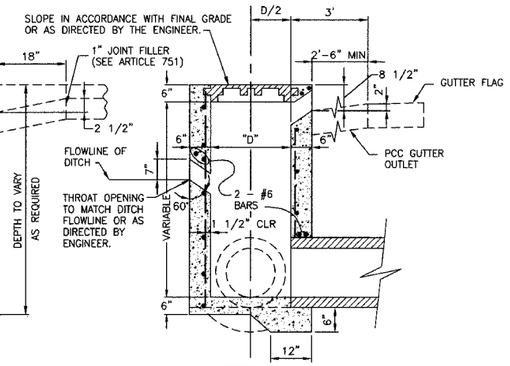

SECTION

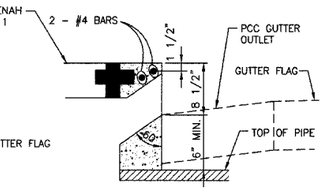

DETAIL AT WEIR

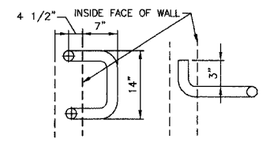

1" ø GALV. IRON STEPS **
SPACED 12" TO 18" C.-C.
USE WHEN INLET IS OVER 4' DEEP

DETAIL OF MANHOLE STEPS

DETAILS OF INLET SPECIAL NO. 8

N.T.S.

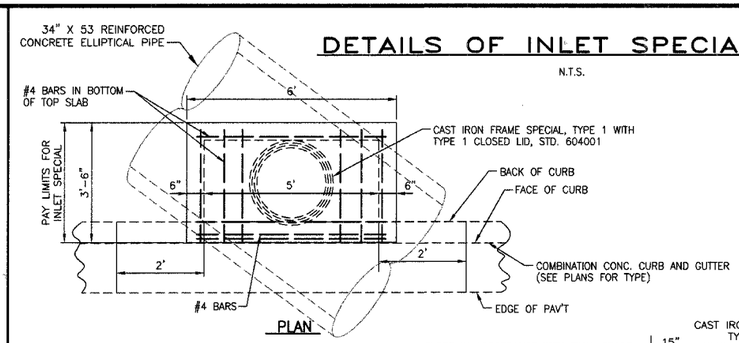

PLAN

NOTES:

CLASS SI CONCRETE SHALL BE USED THROUGHOUT. SET FACE OF INLET 1" BEHIND FACE OF CURB. DEPRESS GUTTER FLOWLINE AT INLET 2 1/2" BELOW NORMAL GUTTER FLOWLINE. CONSTRUCT TRANSITION IN FLOWLINE IN 2 FEET EACH SIDE OF INLET. PIPES SHALL BE CONNECTED TO INLET AS SHOWN ON STORM SEWER LAYOUT.

INLETS WILL BE PAID FOR AT THE CONTRACT UNIT PRICE EACH FOR INLET, SPECIAL, NO. 8, WHICH PRICE SHALL INCLUDE THE CAST IRON FRAME, SPECIAL, TYPE 1 WITH TYPE 1 CLOSED LID, THE REINFORCEMENT BARS, METAL STEPS, AND JOINT FILLER.

**THE GALV. IRON STEPS AS DETAILED HEREON ARE TYPICAL. STEPS OF OTHER DESIGN AND MATERIAL THAT WILL CONFORM TO THE MINIMUM REQUIREMENTS OF THE STEPS SHOWN MAY BE USED WHEN APPROVED BY THE ENGINEER.

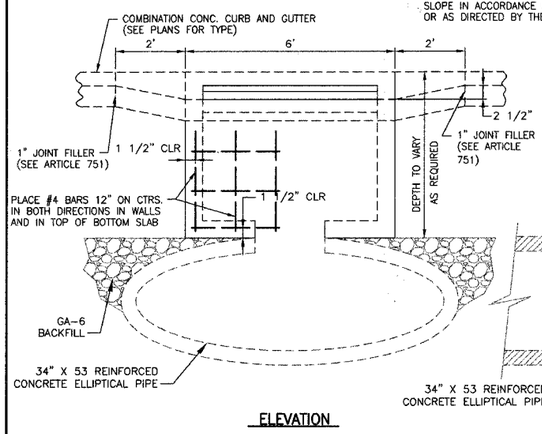

ELEVATION

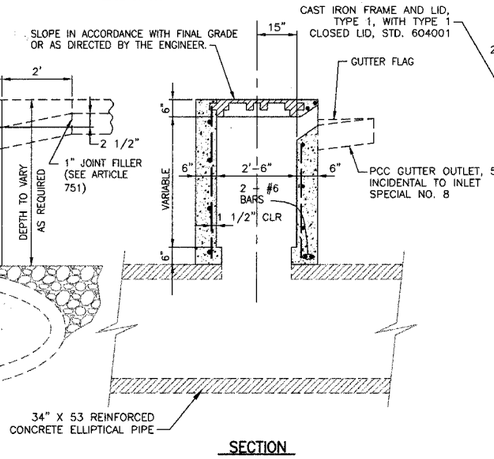

SECTION

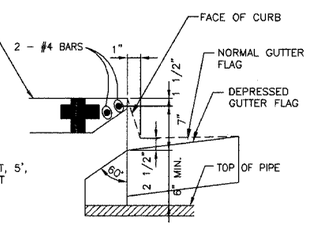

DETAIL AT WEIR

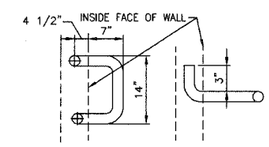

1" ø GALV. IRON STEPS **
SPACED 12" TO 18" C.-C.
USE WHEN INLET IS OVER 4' DEEP

DETAIL OF MANHOLE STEPS

DETAIL OF PRECAST CONCRETE BOX CULVERT SECTION

(WITH COVER LESS THAN 2 FEET - AASHTO DESIGNATION M273)

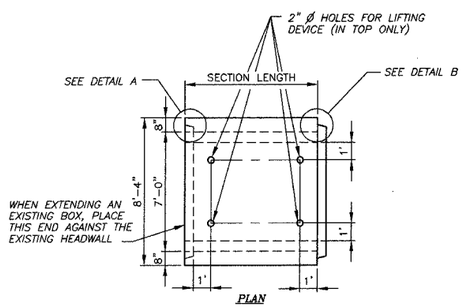

PLAN

LOCATION OF LIFTING HOLES MAY BE VARIED AS NEEDED TO CLEAR REINFORCEMENT

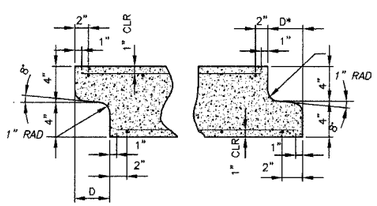

DETAIL A (TYPICAL INLET END)

DETAIL B (TYPICAL OUTLET END)

NOTE: INLET AND OUTLET ENDS SHALL BE COMPATIBLE.
*THE D DIMENSION SHALL CONFORM TO THE MANUFACTURER'S STANDARDS.

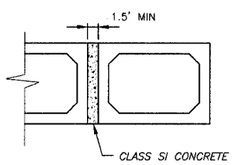

MULTIPLE UNIT PLACEMENT

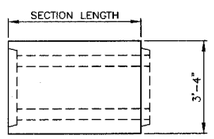

ELEVATION

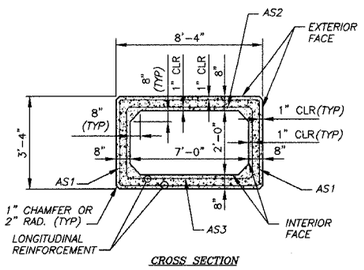

CROSS SECTION

NOTES

SHOP PLANS FOR THE REINFORCEMENT SHALL BE SUBMITTED IN ACCORDANCE WITH THE REQUIREMENTS OF ARTICLE 540.06 OF THE STANDARD SPECIFICATIONS.

MINIMUM CONCRETE STRENGTH SHALL BE 5,000 PSI AFTER 28 DAYS.

THE JOINTS OF THE PRECAST BOX SECTIONS SHALL BE SEALED WITH MASTIC IN ACCORDANCE WITH ARTICLE 1055.01 OF THE STANDARD SPECIFICATIONS FOR ROAD AND BRIDGE ONSTRUCTION IN ILLINOIS, LATEST EDITION.

THE TERMS AS1, AS2, AND AS3 DENOTE THE REQUIRED STEEL AREAS FOR THE REINFORCEMENT AS SPECIFIED IN AASHTO M259. REINFORCEMENT SHALL BE WELDED WIRE FABRIC CONFORMING TO AASHTO M55-81.

LIFTING HOLES SHALL BE FILLED WITH CONCRETE PLUGS AND MASTIC AFTER THE BOX SECTIONS ARE IN PLACE.

DETAIL OF PRECAST CONCRETE BOX CULVERT END SECTION

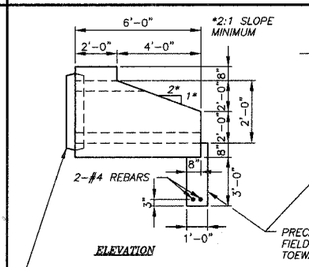

ELEVATION

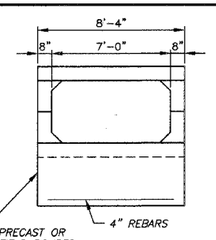

END VIEW

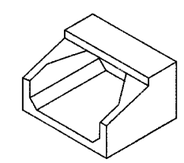

ISOMETRIC

END CONNECTION TO FIT PRECAST BOX CULVERT (BELL OR SPIGOT) MAY BE OMITTED WHEN COLLARING TO AN EXISTING BOX OR HEADWALL

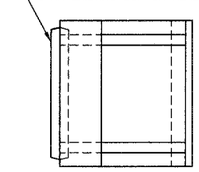

PLAN

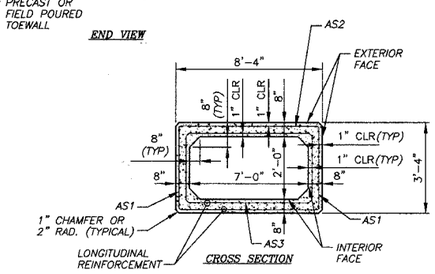

CROSS SECTION

NOTES

SHOP PLANS FOR THE REINFORCEMENT SHALL BE SUBMITTED IN ACCORDANCE WITH THE REQUIREMENTS OF ARTICLE 504.04(a) OF THE STANDARD SPECIFICATIONS.

MINIMUM CONCRETE STRENGTH SHALL BE 5,000 PSI AFTER 28 DAYS.

THE JOINTS OF THE PRECAST BOX SECTIONS SHALL BE SEALED WITH MASTIC IN ACCORDANCE WITH ARTICLE 1055.01 OF THE STANDARD SPECIFICATIONS FOR ROAD AND BRIDGE CONSTRUCTION IN ILLINOIS, LATEST EDITION.

THE TERMS AS1, AS2, AND AS3 DENOTE THE REQUIRED STEEL AREAS FOR THE REINFORCEMENT AS SPECIFIED IN AASHTO M259. REINFORCEMENT SHALL BE WELDED WIRE FABRIC CONFORMING TO AASHTO M55-81.

** NOTE: THE DIMENSIONS INDICATED ARE FOR END SECTIONS THAT ARE TO BE USED WITH PRECAST BOX CULVERT SECTIONS DESIGNED FOR 2' OR MORE OF FILL. THE DIMENSIONS MUST BE MODIFIED FOR THE END SECTION TO BE COMPATIBLE WITH PRECAST CULVERT SECTIONS DESIGNED FOR LESS THAN 2' OF FILL.

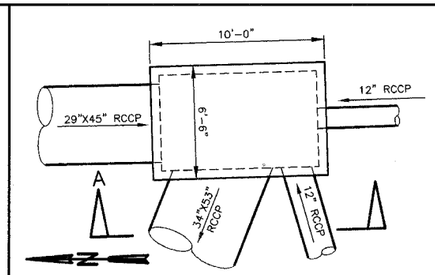

PLAN

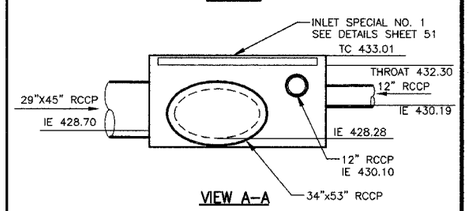

VIEW A-A

PLAN-STRUCTURE #8
STA. 16+45 RT

STATE OF ILLINOIS PROFESSIONAL DESIGN FIRM LICENSE NO. 184-004515

REVISIONS	
DATE	NO.

© 2008 ALL RIGHTS RESERVED

CLARIDA & ZIEGLER ENGINEERING CO.
308 South Court St, P.O. Box 937
Marion, Illinois 62959
Phone - (618)993-6411, Fax - (618)993-6750

MISCELLANEOUS DETAILS
FAIR STREET WIDENING
MARION, ILLINOIS

Date 2/26/08	DR. By TW	CK'D By HGC
Scale NONE	Job No. 05142	Sheet No. 53 of 53

P:\05142\PLANS\SJ Box Culv & Misc Dtls.dwg, 4/9/2008 3:35:02 PM, 1:1