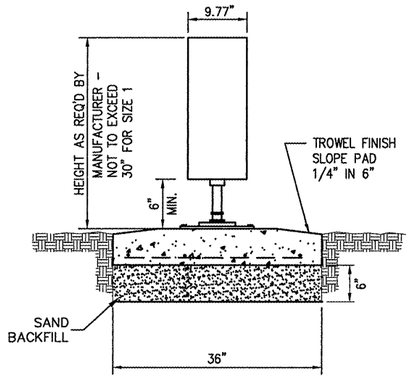

SIDE VIEW
(NOT TO SCALE)

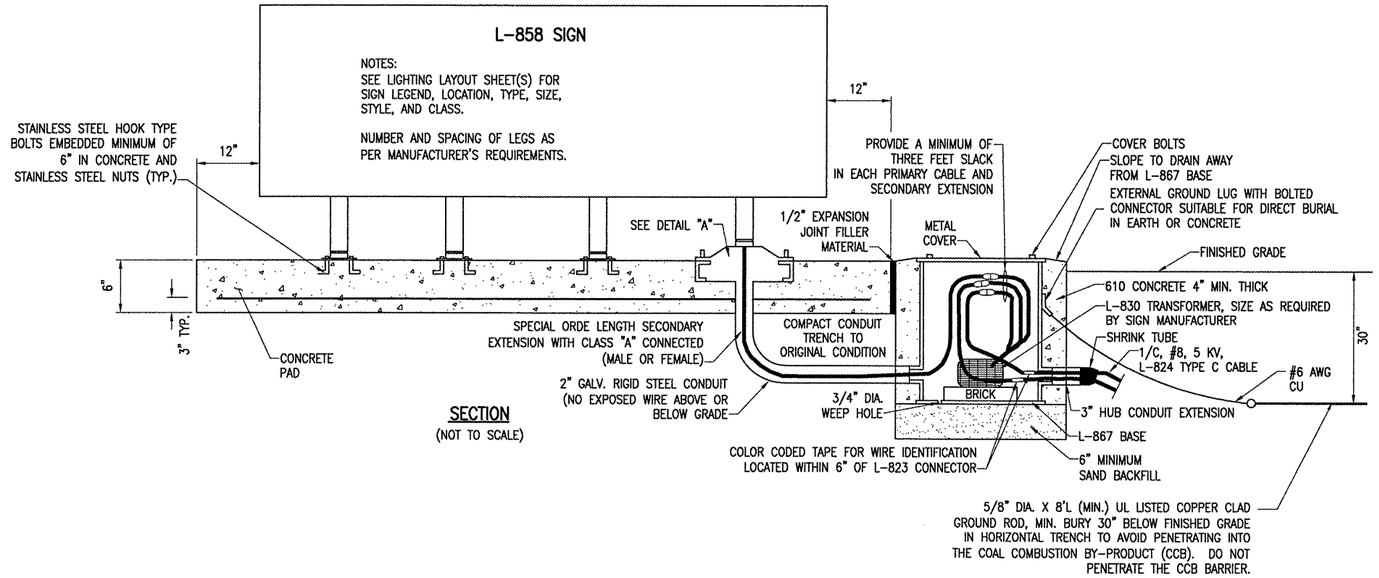

SECTION
(NOT TO SCALE)

GENERAL NOTES

SEE LIGHTING LAYOUT SHEET FOR SIGN LEGEND, LOCATION, TYPE, SIZE, STYLE, AND CLASS.

SEE SHEETS 61 THROUGH 62 FOR ELECTRICAL NOTES.

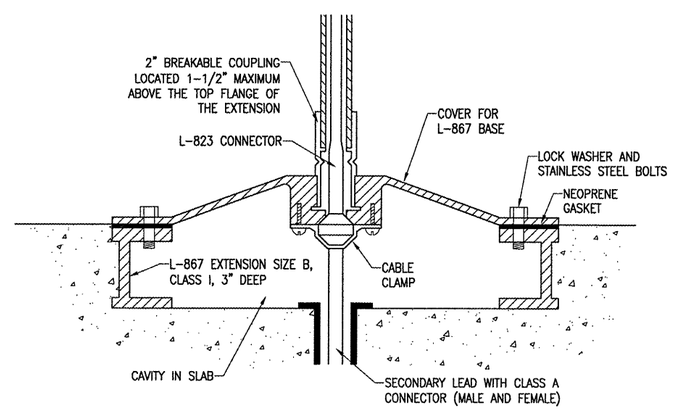

DETAIL "A"
(NOT TO SCALE)

LE039

HANSON

HANSON PROFESSIONAL SERVICES INC.

815 Commerce Drive, Suite 200
Oak Brook, Illinois 60523
Telephone: 630.990.3800
Fax: 630.990.3801

Illinois Professional Design Firm
Registration No. 184-001084

© Copyright Hanson Professional Service Inc. 2008

Chicago-Romeoville Airport

JOLIET REGIONAL PORT DISTRICT

1 George Michas Drive
Romeoville, Illinois 60446
Telephone: 815.838.9497
Fax: 815.838.9524

EXTEND RUNWAY 2-20: CONSTRUCT TAXIWAY TURNAROUND

AIP PROJECT NO. 3-17-0140-B42
IDA PROJECT NO. LOT-3792

No.	Drawing Issue Description	Date	By

Date
APRIL 18, 2008

Sheet Title
PROPOSED ELECTRICAL DETAILS SHEET 1

07A0166
Project Number

KNL 03/11/08
Layout By Date

KNL 03/11/08
Designed By Date

RMH 03/20/08
Reviewed By Date

MV
Drawn By

57
Sheet No.

I:\07JOBS\03840\07A0166\DRAWINGS\SHEETS\57-ELECTRICAL DETAILS.DWG APR 18, 2008 10:19AM HAUSMORBR2