CIVIL ENGINEERING CONSULTANTS
RWA
Regina Webster & Associates, Inc.
8619 W. Bryn Mawr Ave., Suite 602
Chicago, IL 60631-3551
773-283-2600 Fax: 773-283-2602
www.RWAengineers.com

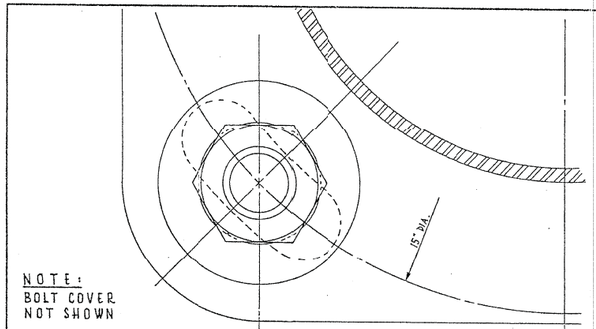

NOTE:
BOLT COVER
NOT SHOWN

INSTALLATION NOTES

STEP 1 COAT EXPOSED PORTION OF ANCHOR BOLTS WITH APPROVED ANTI RUSTING GREASE ("NO-OX" OR EQUAL).

STEP 2 INSTALL LOWER LEVELLING NUTS & WASHERS. SET AT PROPER GRADE WITH HAND LEVEL. USE TABLE FOR APPROPRIATE DIMENSIONS.

STEP 3 MOUNT POLE OR PEDESTAL, ATTACH TOP WASHERS & NUTS HAND TIGHT.

STEP 4 PLUMB POLE OR PEDESTAL AFTER ALL MASTARMS, STREET LIGHTS, TRAFFIC SIGNALS & OTHER APPURTENANCES ARE ATTACHED TO POLE & TIGHTEN ALL NUTS.

STEP 5 ATTACH NUT COVERS WHERE REQUIRED.

STEP 6 DO NOT GROUT IN SPACE BETWEEN BOTTOM OF POLE & TOP OF FOUNDATION. TOP OF FOUNDATION OR SURFACE OF SIDEWALK MUST BE LEFT CLEAN AND SMOOTH.

STEP 7 POLE OR PEDESTAL IS TO BE PERFECTLY PLUMB, NO "RAKE" IS TO BE LEFT.

IF NECESSARY:
ANCHOR BOLT TO BE TRIMMED WITH SAW. DO NOT BURN, AS THIS DRASTICALLY REDUCES THE TENSILE STRENGTH OF ANCHOR BOLT.

COAT ANCHOR BOLT WITH RUST-OLEUM HARD HAT ZINC RICH COMPOUND.

TABLE

UNIT	ANCHOR BOLT SIZE						
	1"		1 1/4"		1 1/2"		3/4"
	POLE GAUGES						ALUM. PED.
	7 GA.	3 GA.	7 GA.	3 GA.	7 GA.	3 GA.	
A	7/16"	7/16"	1 1/8"	1 5/16"	1 1/8"	7/8"	3/4"
B	1"	1"	1 1/4"	1 1/4"	1 1/2"	1 1/2"	3/4"
C	1/4"	1/4"	5/16"	5/16"	3/8"	3/8"	3/16"
D	5/32"	5/32"	1/4"	1/4"	1/4"	1/4"	5/32"
E	1"	1"	1 1/4"	1 1/2"	1 1/2"	1 3/4"	5/8"

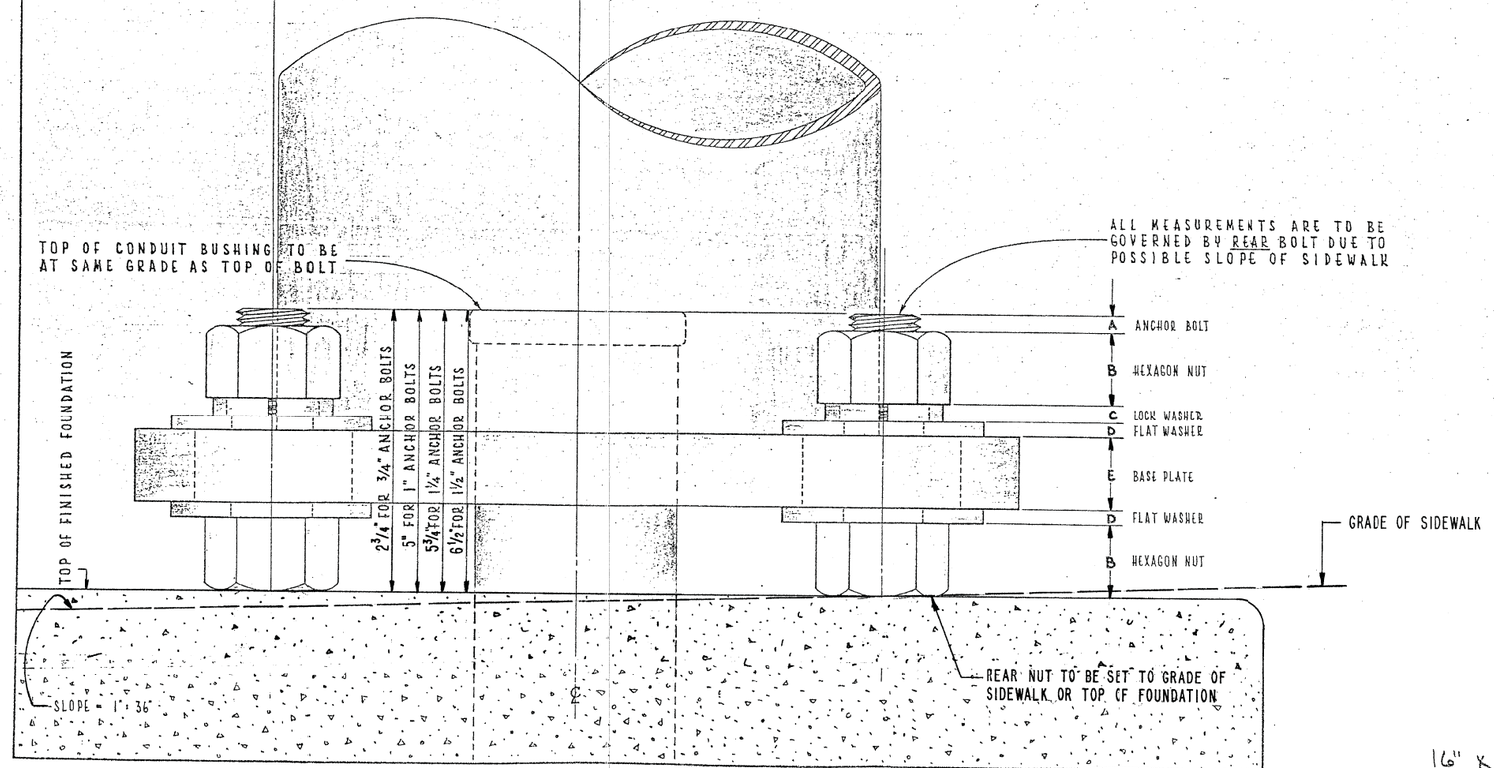

16" x 21"

CONSTRUCTION METHOD FOR "DOUBLE-NUT" INSTALLATION OF POLES AND PEDESTALS

CITY OF CHICAGO
DEPT. OF STREETS AND SANITATION
BUREAU OF ELECTRICITY
DIVISION OF ELECTRICAL ENGINEERING

DRAFTSMAN: EUGENE GERULIS	CHIEF DRAFTSMAN: R.J.S.	ENGINEER: M.J.S.
SUPERVISING ENGINEER:	ELEC. DESIGN ENGR.	DWG. NO. 837
ENGINEER OF ELECTRICITY: Michael J. Shine		
GEN'L. SUPT. OF ELECTRICITY		
DEPUTY COMMISSIONER: Ronald L. Youngblood		
SIZE: 22 | 3	SCALE: 1" = 1"	DATE: 6-7-85

FILE NAME = c:\pw_work\dlz\ccooney\dms19784\63DETAIL8.dgn	USER NAME = $USER$	DESIGNED - KMM	REVISED -
		DRAWN - LV	REVISED -
	PLOT SCALE = $SCALE$	CHECKED - JDH	REVISED -
	PLOT DATE = 3/27/2014	DATE - 03-31-2014	REVISED -

STATE OF ILLINOIS
DEPARTMENT OF TRANSPORTATION

63RD STREET OVER DAN RYAN EXPRESSWAY
CDOT STANDARD DETAILS

SCALE: N.T.S. | SHEET NO. OF SHEETS | STA. TO STA.

F.A.I RTE.	SECTION	COUNTY	TOTAL SHEETS	SHEET NO.
94	1920-B	COOK	142	47

CONTRACT NO. 60J15

ILLINOIS FED. AID PROJECT