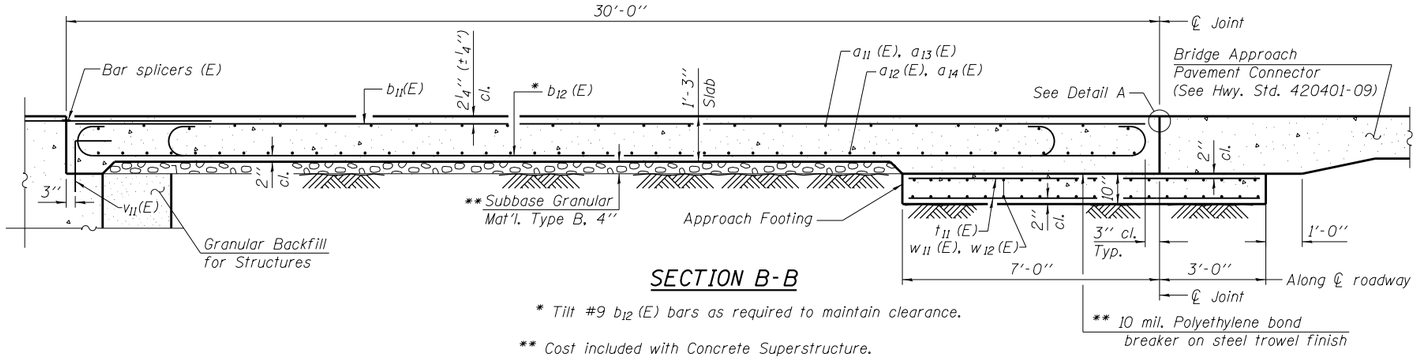

SECTION B-B

* Tilt #9 b_{12} (E) bars as required to maintain clearance.

** Cost included with Concrete Superstructure.

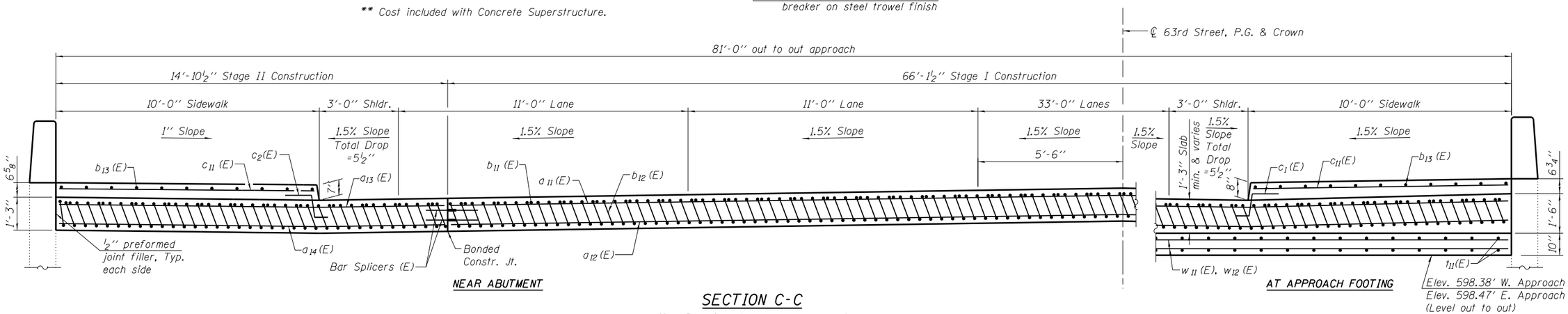

SECTION C-C

(See Plan for dimensions not shown)

*** Cost included with Concrete Superstructure.

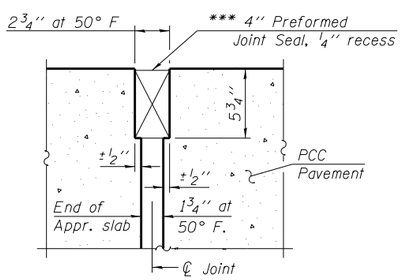

RIGID PAVEMENT

DETAIL A

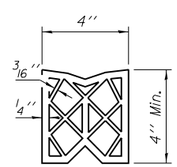

PREFORMED JOINT SEAL

*In lieu of bottom leg, the deck may be drilled and the c_1(E) and c_2(E) bars may be set according to Article 509.06 of the Standard Specifications. Drilled holes shall be roughened or scored per manufacturer's recommendations. Maximum depth of hole shall not exceed 6". Contractor shall take all necessary precautions to prevent drilled hole interference with deck reinforcement bars. Locate longitudinal bars to miss drilled locations. Locate drilled holes to miss transverse bars in deck.

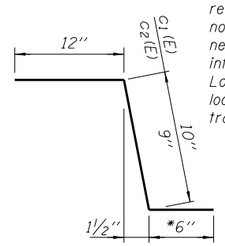

BARS c_1(E) & c_2(E)

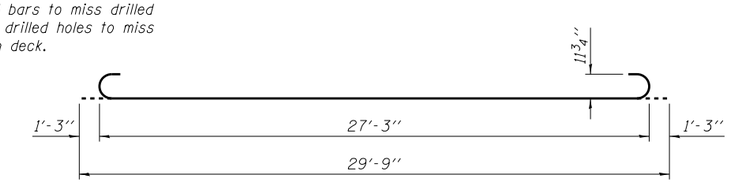

BAR b_{12} (E)

TWO APPROACHES BILL OF MATERIAL

Bar	No.	Size	Length	Shape
a_{11} (E)	100	#4	34'-5"	
a_{12} (E)	184	#5	34'-7"	
a_{13} (E)	50	#4	14'-6"	
a_{14} (E)	92	#5	14'-6"	
b_{11} (E)	132	#4	29'-8"	
b_{12} (E)	390	#9	29'-9"	
b_{13} (E)	44	#5	31'-2"	
c_1 (E)	62	#5	2'-4"	
c_2 (E)	62	#5	2'-3"	
c_{11} (E)	124	#5	9'-6"	
t_{11} (E)	328	#4	9'-8"	
w_{11} (E)	160	#5	34'-7"	
w_{12} (E)	80	#5	14'-6"	
Concrete Structures			Cu. Yd.	50.0
Concrete Superstructure			Cu. Yd.	263.5
Reinforcement Bars, Epoxy Coated			Pound	64,930

NOTES

1. Approach slab and sidewalk concrete shall be paid for as Concrete Superstructure.
2. Approach footing concrete shall be paid for as Concrete Structures.
3. Reinforcement shall be paid for as Reinforcement Bars, Epoxy Coated.
4. The approach footing maximum applied service bearing pressure (Qmax) = 2.0 ksf.
5. For bar splicer details, see sheet S49.
6. Cost of excavation for approach footing included with Concrete Structures.
7. For Granular Backfill for Structures and drainage treatment details, see sheet S34.