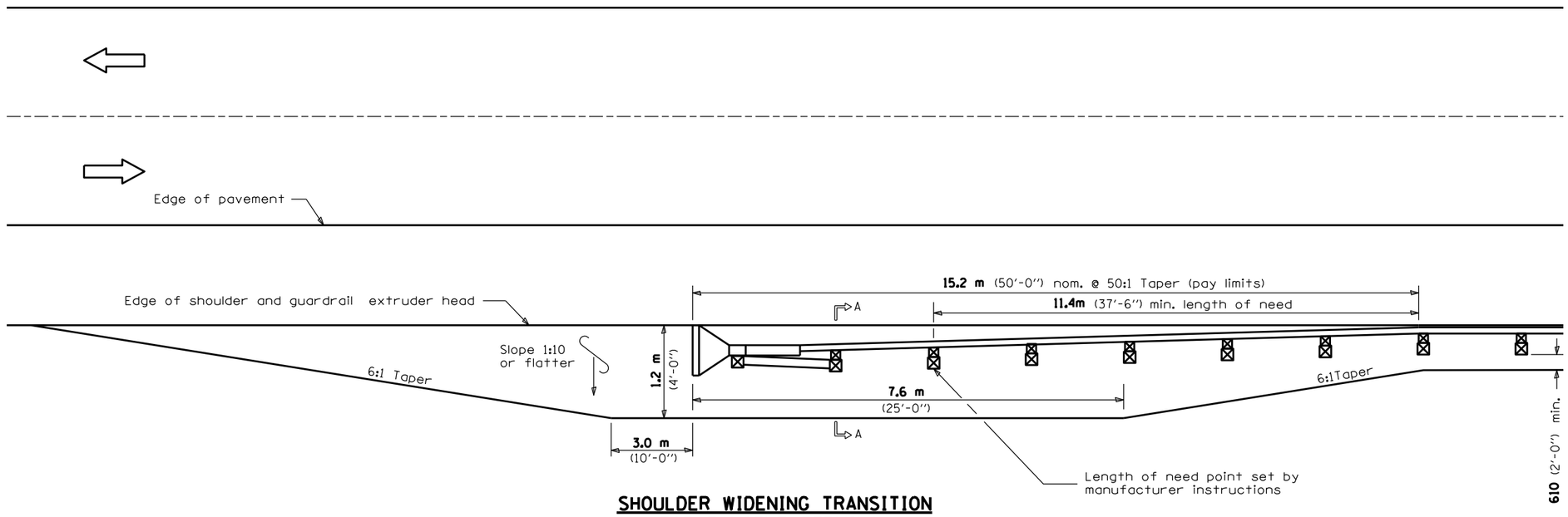

SHOULDER WIDENING TRANSITION FOR TANGENT TERMINAL

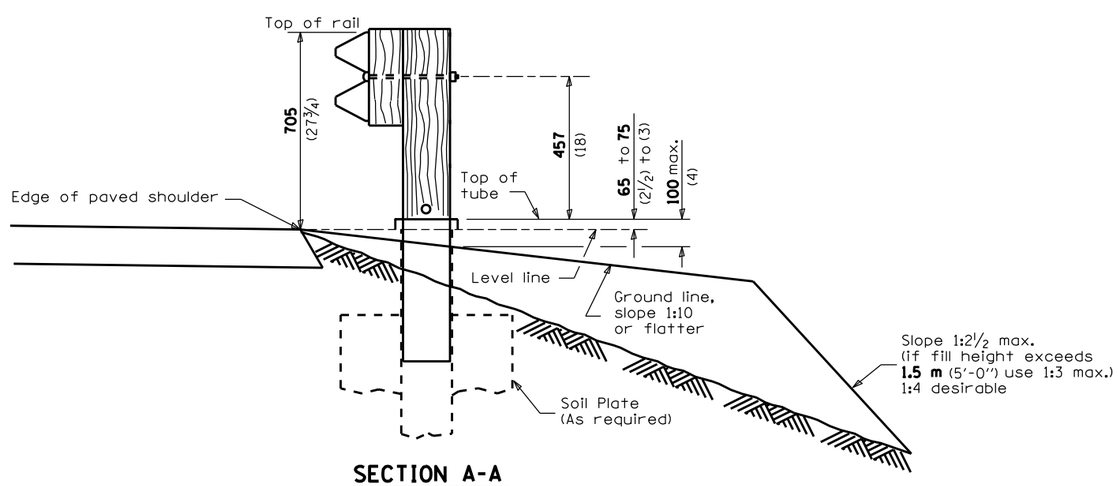

SECTION A-A

GENERAL NOTES

50:1 Taper required so the guardrail head will not encroach on the shoulder.

All slope ratios are expressed as units of vertical displacement to units of horizontal displacement (V:H).

All dimensions are in millimeters (inches) unless otherwise shown.

• D-3 HIGHWAY DAMAGE REPAIR 2015

FILE NAME = $FILEL$	USER NAME = $USER$	DESIGNED - ___	REVISED - ___	STATE OF ILLINOIS DEPARTMENT OF TRANSPORTATION	PRE-MGS EFFECTIVE 4-1-06 SHOULDER WIDENING FOR TYPE 1 (SPECIAL) GUARDRAIL TERMINALS STANDARD 630301-03 (Sheet 1 of 2)	F.A. RTE.	SECTION	COUNTY	TOTAL SHEETS	SHEET NO.
		DRAWN - ___	REVISED - ___			VAR.	•	VAR.	43	29
	PLOT SCALE = $SCALE$	CHECKED - ___	REVISED - ___					CONTRACT NO. 66D15		
	PLOT DATE = $DATE$	DATE - ___	REVISED - ___		SCALE: ___ SHEET NO. __ OF __ SHEETS STA. ___ TO STA. ___	FED. ROAD DIST. NO. 7	ILLINOIS	FED. AID PROJECT		