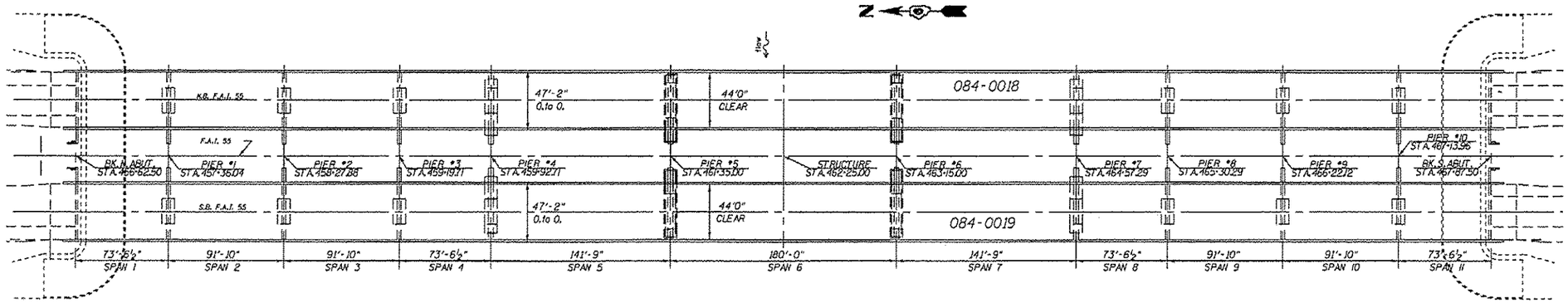

PLAN

SN 084-0019

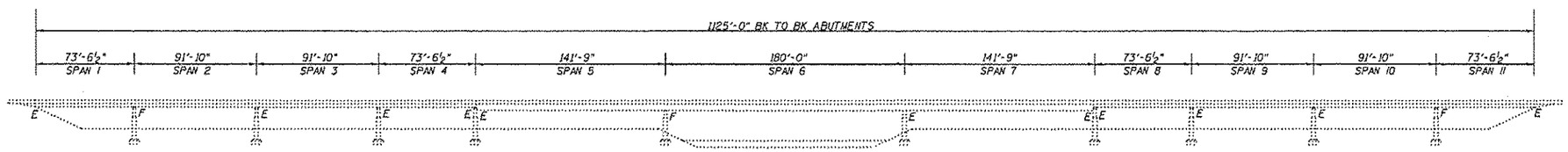

ELEVATION

SN 084-0019

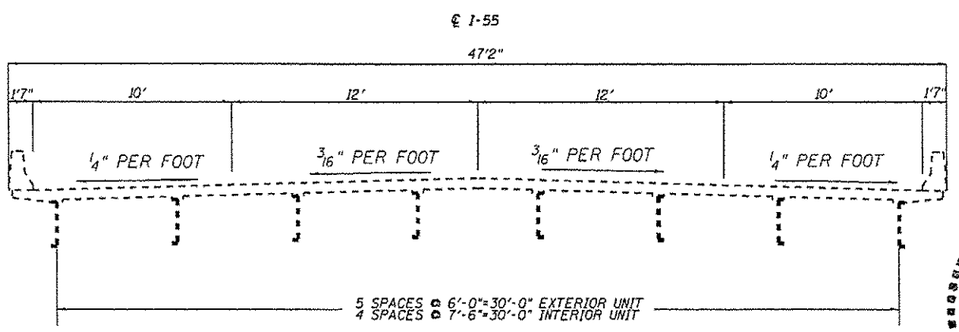

SN 084-0019

CROSS SECTION

TOTAL BILL OF MATERIAL

ITEM	UNIT	QUANTITY
DECK SLAB REPAIR (PARTIAL)	SQ. YD.	465.3
DECK SLAB REPAIR (FULL DEPTH, TYPE II)	SQ. YD.	21.3

LICENSED STRUCTURAL ENGINEER
DAVID CARL PUZEY
081-005470
SPRINGFIELD
ILLINOIS
STATE OF ILLINOIS

D. Carl Puzey 5/9/14
Expires 11/30/14

GENERAL NOTES:

THE PATCH SIZES AND LOCATIONS SHOWN ON THE PLAN SHEETS ARE ESTIMATED. THE FINAL PATCH LOCATIONS SHALL BE DETERMINED BY THE ENGINEER IN THE FIELD.

PROJECT LOCATION 1

FILE NAME =	USER NAME = dudlmybm	DESIGNED - BAD	REVISED -
D:\OPERATIONS\Bridgeplans_CAD\72G84 - 0840018 & 0019 deck patching\plansheets.dgn		DRAWN - GLP, DMS	REVISED -
	PLOT SCALE = 40.0000 ' / in.	CHECKED - CCC	REVISED -
Default	PLOT DATE = Apr-09-2014 01:10:45PM	DATE -	REVISED -

STATE OF ILLINOIS
DEPARTMENT OF TRANSPORTATION

SN 084-0019
BRIDGE PLAN & ELEVATION

SCALE: SHEET OF SHEETS STA. TO STA.

F.A.I. RTE.	SECTION	COUNTY	TOTAL SHEETS	SHEET NO.
55	(84-2-2) I-4	SANGAMON	28	20
		CONTRACT NO. 72G84		
		ILLINOIS FED. AID PROJECT		