ROUTE NO.	SEC.	COUNTY	TOTAL SHEETS	SHEET NO.
F.A. 194	5HB	WINNEBAGO CO.	34	1
STA.		TO STA.		
U.S. ROAD DIST. NO. 7	ILLINOIS		PROJ. F-284(6)	

SN 101-0072
&
101-0071

STATE OF ILLINOIS
DEPARTMENT OF PUBLIC WORKS AND BUILDINGS
DIVISION OF HIGHWAYS

PLANS FOR PROPOSED FEDERAL AID HIGHWAY

ROUTE 5 BRIDGE

WINNEBAGO COUNTY

ROCKFORD BYPASS

F.A. ROUTE 194 SECTION 5HB
F.A. ROUTE 194 SECTION 5HF

PROJECT F-284 (6)

INDEX OF SHEETS

1 TITLE SHEET, INDEX OF SHEETS
2 GENERAL NOTES-BORING LOGS-SUMMARY OF QUANTITIES
3 PLAN AND PROFILE ROCKFORD BYPASS
4 PLAN AND PROFILE DETOUR ROAD
5 GENERAL PLAN
6 PIER 1
7 PIER 2
8 PIER 3
9 PLAN AND ELEVATION ABUTMENT 1 E.B. RDWY
10 PLAN AND ELEVATION ABUTMENT 2 E.B. RDWY
11 FTG. PLAN-ABUTMENTS 1&2 E.B. RDWY
12 PLAN AND ELEVATION ABUTMENT 1 W.B. RDWY
13 PLAN AND ELEVATION ABUTMENT 2 W.B. RDWY
14 FTG. PLAN-ABUTMENTS 1&2 W.B. RDWY
15 ABUTMENT AND WINGWALL SECTIONS
16 DECK PLAN - PART 1 FOR E.B. RDWY
17 DECK PLAN - PART 2 FOR E.B. RDWY
18 DECK PLAN - PART 1 FOR W.B. RDWY
19 DECK PLAN - PART 2 FOR W.B. RDWY
20 DECK CROSS SECTIONS
21 STEEL FRAMING PLAN
22 STEEL DETAILS PART 1
23 STEEL DETAILS PART 2
24 STEEL DETAILS PART 3
25 & 25A HANDRAIL DETAILS E.B. RDWY, CONNECTION DETAILS
26 HANDRAIL DETAILS W.B. RDWY
27 REINFORCING SCHEDULE E.B.
28 REINFORCING SCHEDULE W.B.
29 CROSS SECTIONS (MAIN LINE)
30 CROSS SECTIONS (MAIN LINE)
31 CROSS SECTIONS (MAIN LINE)
32 CROSS SECTIONS (DETOUR)
33 PILE STANDARDS
34. STD. 1971-2 (ROAD UNDER CONSTRUCTION SIGN)
STD. 1978-1 (BARRICADE)
STD. 2114 (FLAGMAN'S TRAFFIC CONTROL SIGN)
STD. 2136 (HIGHWAY IMPROVEMENT SIGN)

LOCATION OF SECTION INDICATED THUS:-

PLANS FOR STRUCTURES EXAMINED April 27, 1959
ENGINEER OF BRIDGE & TRAFFIC STRUCTURES

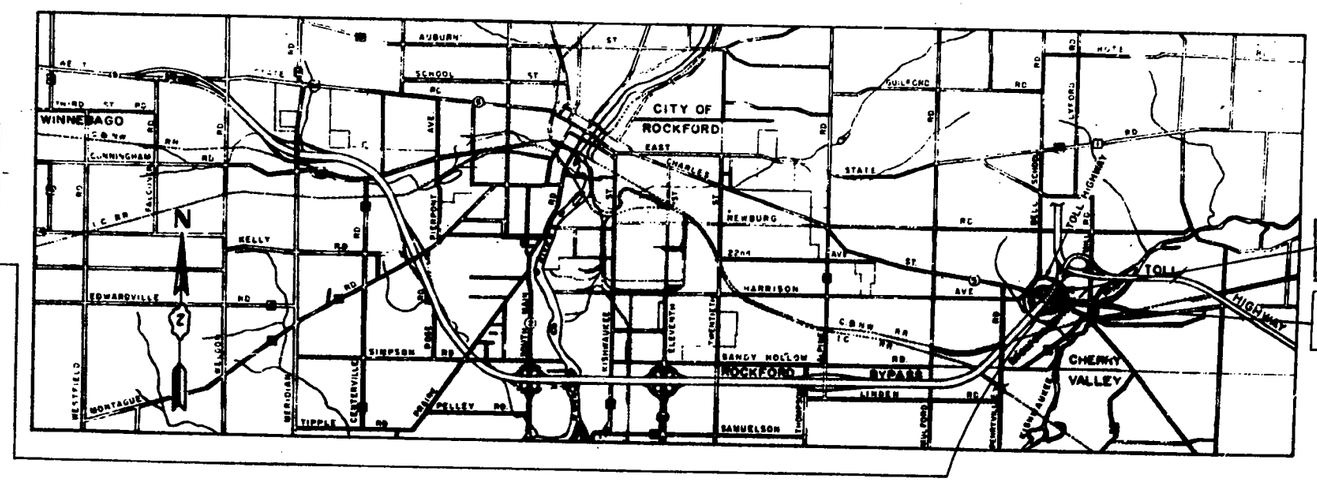

PROJECT F-284(6) BEGINS AT STA. 871+13.07

PROJECT F-284(6) ENDS AT STA. 873+64.47

STATE OF ILLINOIS
DEPARTMENT OF PUBLIC WORKS AND BUILDINGS
DIVISION OF HIGHWAYS
SUBMITTED April 15, 1959
RECOMMENDED September 11, 1959
APPROVED September 11, 1959
APPROVED September 11, 1959
APPROVED September 11, 1959

SECTION 5HB CONSISTS OF THE CONSTRUCTION OF TWO(2) 4-SPAN WF BEAM GRADE SEPARATION STRUCTURES (ROCKFORD BYPASS OVER ROUTE 5) SPANS: 1 AT 46-6½, 2 AT 67-6 AND 1 AT 46-6½ AT STATION 872+39.77 AT THE INTERSECTION OF THE ROCKFORD BYPASS AND ROUTE 5 WITH THE EXCEPTION OF FURNISHING AND FABRICATING STRUCTURAL STEEL, FURNISHING AND APPLYING ONE (1) SHOP COAT OF PAINT AND THE DELIVERY OF THE STRUCTURAL STEEL TO THE SITE.

SECTION 5HF INCLUDES FURNISHING AND FABRICATING STRUCTURAL STEEL, FURNISHING AND APPLYING SHOP COAT OF PAINT, AND THE DELIVERY OF THE STRUCTURAL STEEL FOR TWO(2) 4-SPAN WF BEAM GRADE SEPARATION STRUCTURES. (ROCKFORD BYPASS OVER ROUTE 5) SPANS: 1 AT 46-6½, 2 AT 67-6 AND 1 AT 46-6½ AT STATION 872+39.77 AT THE INTERSECTION OF THE ROCKFORD BYPASS AND ROUTE 5.

ROAD CLASSIFICATION
F.A. RTE. 194 870-T-70
S.B.I. RTE. 5 740-M-70

ENTIRE SECTION INSPECTED AND APPROVED AS TO POLICY.
DATE April 15, 1959
DISTRICT ENGINEER

Job No 20013 (HF)
Job No 20014 (HB)

DEPARTMENT OF COMMERCE
BUREAU OF PUBLIC ROADS
APPROVED
DIVISION ENGINEER DATE

MACCABEE, CAMPBELL & ASSOCIATES
CONSULTING ENGINEERS
173 W. MADISON ST. CHICAGO, ILL.

FA Route 194 Section 5HB, 5HF Winnebago County

ROUTE NO.	SEC.	COUNTY	TOTAL SHEETS	SHEET NO.
F.A. 194	5HB	WINNEBAGO	34	2
STA.	TO STA.			
FED. ROAD DIST. NO. 7 ILLINOIS		PROJ.		

BORING NO. 1

GROUND ELEV. = 781.7'

0'-0	N	Qu	
1'-0			BROWN SILTY TOP SOIL
	8	1.9	BROWN SILTY CLAY, MOIST, STIFF.
4'-5			
	14		BROWN SANDY CLAY, SOME SMALL TO LARGE GRAVEL, MOIST, MEDIUM DENSE.
7'-0			
	62	3.0	BROWN SANDY CLAY, SOME SMALL GRAVEL, HARD, MOIST.
	62	2.9	
12'-0			
	46	3.0	BROWN MEDIUM TO FINE SAND & SILT, TRACE OF CLAY & SMALL TO LARGE GRAVEL, MOIST, DENSE.
16'-6			
	101		BROWN MEDIUM TO FINE SAND & LIMESTONE, MOIST, VERY DENSE.
	117	4.4	
18'-6			

BORING NO. 2

GROUND ELEV. = 778.1'

0'-0	N	Qu	
2'-0			BROWN SILTY TOP SOIL.
	16		BROWN SANDY CLAY, MOIST, TOUGH.
	17	2.9	
7'-0			
	48		BROWN COARSE TO MEDIUM SAND, SOME SILT & CLAY & SMALL TO LARGE GRAVEL, DENSE, MOIST.
	51		
	38	2.1	W.L.
16'-6			
	88	2.0	BROWN COARSE TO MEDIUM SAND, SOME SILT & CLAY & SMALL TO LARGE GRAVEL, MOIST VERY DENSE.
	102		
	129		
21'-0			

BORING NO. 3

GROUND ELEV. = 781.4'

0'-0	N	Qu	
1'-0			BROWN SILTY TOP SOIL
	14	5.8	BROWN SILTY CLAY, TRACE OF SMALL TO LARGE GRAVEL, MOIST, TOUGH.
4'-6			
	21		BROWN FINE TO MEDIUM SAND, TRACE OF CLAY & SMALL TO LARGE GRAVEL MOIST, MEDIUM DENSE.
7'-0			
	28	3.6	BROWN SANDY CLAY, SOME SOME SMALL TO LARGE GRAVEL MOIST, VERY TOUGH.
	26	3.9	
12'-0			
	31		BROWN SANDY CLAY, SOME SMALL TO LARGE GRAVEL, MOIST, HARD.
	101	9.7	
17'-0			
18'-6	104/.4	2.9	BROWN MEDIUM TO FINE SAND, LITTLE CLAY, MOIST, VERY DENSE.

BORING NO. 4

GROUND ELEV. = 779.7'

0'-0	N	Qu	
1'-0			SMALL TO LARGE GRAVEL & SAND FILL
	11	2.8	BROWN SANDY CLAY, TRACE OF SMALL GRAVEL, MOIST, TOUGH
	12	1.9	
7'-0			
	49	3.6	BROWN SANDY CLAY, TRACE OF SMALL GRAVEL, MOIST, HARD.
	84		
12'-0			
	80	8.0	BROWN FINE TO MEDIUM SAND, SOME SILT & CLAY LIMESTONE, MOIST, VERY DENSE.
	120	13.4	
	127		
18'-6			

BORING NO. 5

GROUND ELEV. = 781.8'

0'-0	N	Qu	
1'-0			SMALL TO LARGE GRAVEL & FINE SAND & SILT FILL.
	66	7.5	BROWN MEDIUM SAND & SILT, TRACE OF CLAY, MOIST, VERY DENSE.
	84	5.0	
	84	6.7	
	106	8.1	
	119		
13'-6			

GENERAL NOTES

CLASS "X" CONCRETE SHALL BE USED THROUGHOUT.
ALL EXPOSED EDGES SHALL HAVE A 3/8" CHAMFER.
THE CONCRETE FLOOR SLAB SHALL BE FINISHED IN ACCORDANCE WITH ART. 51.19(a) OF THE STANDARD SPECIFICATIONS.
RIVETS 3/4" Ø OPEN HOLES 13/16" Ø UNLESS NOTED.
FIELD CONNECTIONS RIVETED EXCEPTED AS NOTED.
ALL ROLLERS, ROCKERS, BEARING PLATES, LEAD PLATES, PINTLES AND ANCHOR BOLTS SHALL BE FABRICATED AND SET IN ACCORDANCE WITH ART. 51.15 OF THE STANDARD SPECIFICATIONS AND ARE INCLUDED IN QUANTITY OF STRUCTURAL STEEL.
ANCHOR BOLTS SHALL BE SET BEFORE RIVETING DIAPHRAGMS OVER SUPPORTS.
ALL STEEL HANDRAIL POSTS SHALL BE VERTICAL.
EXPANSION GUARDS SHALL BE FABRICATED AND ERECTED IN ACCORDANCE WITH ART. 51.13 (d) OF THE STANDARD SPECIFICATIONS AND ARE INCLUDED IN QUANTITY OF STRUCTURAL STEEL.
THE OUTSIDE FACE OF THE VERTICAL LEGS OF THE EXPANSION GUARDS SHALL BE GIVEN TWO SHOP COATS OF RED LEAD PAINT.
EXCEPT AS OTHERWISE NOTED, ALL STRUCTURAL STEEL SHALL RECEIVE ONE SHOP COAT OF RED LEAD PAINT AND TWO FIELD COATS OF ALUMINUM PAINT. SEE ART. 56.1 TO 56.5 INCLUSIVE OF THE STANDARD SPECIFICATIONS.
ALL PAINT SHALL BE FURNISHED AND APPLIED BY THE CONTRACTOR.
REINFORCEMENT BARS SHALL BE PLACED EXACTLY AS SHOWN ON THE PLANS AND IN ACCORDANCE WITH ART. 59.5 OF THE STANDARD SPECIFICATIONS.
THE CONTRACTOR SHALL DRIVE TWO CONCRETE TEST PILES, ONE AT ABUTMENT Nº 1 AND ONE AT ABUTMENT Nº 2 IN A PERMANENT LOCATION. TWO TIMBER TEST PILES SHALL BE DRIVEN, ONE IN THE VICINITY OF THE WINGWALL AT ABUTMENT Nº 1 AND ONE IN THE VICINITY OF THE WINGWALL AT ABUTMENT Nº 2 BEFORE ORDERING THE REMAINDER OF THE PILES.

BORING NOTES:

N = NUMBER OF BLOWS PER FT. FOR A 140# HAMMER FALLING 30 INCHES.

Qu = UNCONFINED COMPRESSIVE STRENGTH IN KIPS PER SQ. FT.

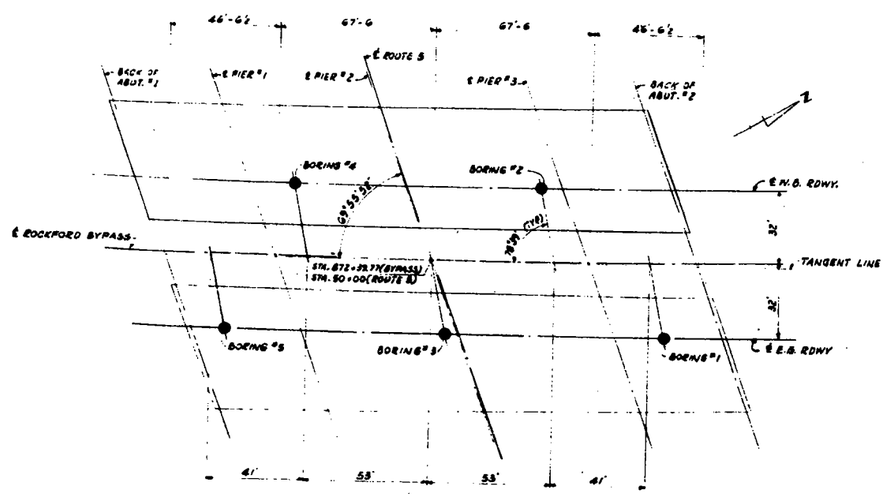

ROUTE 5 BRIDGE 5HB
BORING LOCATION PLAN

SUMMARY OF QUANTITIES SECTION - 5HB

Non-Participating	Project F-194(6)	CODE NO.	ITEM	UNIT	SUPER STRUCTURE	SUB STRUCTURE	TOTAL
8,233	8,234	013001	BORROW EXCAVATION	CU. YDS.			16,467
	2,845	011001	EARTH EXCAVATION	CU. YDS.			2,845
	12,42	029003	GRAVEL OR CRUSHED STONE BASE COURSE, TYPE B	CU. YDS.			1242
	697	039001	BITUMINOUS MATERIALS (PRIME COAT)	GALS.			697
	1,398	039002	BITUMINOUS MATERIALS (COVER & SEAL COATS)	GALS.			1398
	38	039003	COVER COAT AGGREGATE	TONS			38
	19	039004	SEAL COAT AGGREGATE	TONS			19
637	560	082001	PAVEMENT REMOVAL	SQ. YDS.			1197
301	302	050001	CLASS "A" EXCAVATION FOR STRUCTURES	CU. YDS.			603
726.6	780.2	052003	CLASS "X" CONCRETE	CU. YDS.	612.1	844.8	1456.9
314,963	314,963	054003	ERECTING STRUCTURAL STEEL	LBS.	633,926		633,926
450	451	055001	FURNISHING AND ERECTING METAL HANDRAIL	LIN. FT.			901
105,861	105,861	059001	REINFORCEMENT BARS	LBS.	136,172	75,532	211,704
300	380	060044	FURNISHING CONCRETE PILES	LIN. FT.			680
300	380	060043	DRIVING CONCRETE PILES	LIN. FT.			680
320	320	060004	FURNISHING CREOSOTED PILES, UP TO 20'	LIN. FT.			640
745	745	060008	DRIVING TIMBER PILES	LIN. FT.			1490
	2	060043	TEST PILES (CONCRETE)	EACH			2
	2	060007	TEST PILES (TIMBER)	EACH			2
1	1	061001	NAME PLATES	EACH			2
523	523	080001	SLOPE WALL	SQ. YDS.			1086
220	220	088229	PIPE CULVERTS TYPE 2 (36" DIA.)	LIN. FT.			440
16	16	060042	METAL SHOES	EACH			32
425	425	060005	FURNISHING CREOSOTED PILES, 20' TO 35'	LIN. FT.			850

SUMMARY OF QUANTITIES SECTION - 5HB-F

			ITEM	UNIT	SUPER STRUCTURE	SUB STRUCTURE	TOTAL
316,963	316,963	054002	FURNISHING STRUCTURAL STEEL	LBS.			633,926

ILLINOIS DIVISION OF HIGHWAYS
ROCKFORD BYPASS
F. A. ROUTE 194
PROJECT _____ SECTION 5HB
WINNEBAGO COUNTY
GENERAL NOTES - BORING LOGS
SUMMARY OF QUANTITIES
Designed By: | Drawn By: G.W.G. | Checked By: R.R.G.

Revised 12-10-59 - Class "X" Concrete from 1068.6 to 1456.6 Due to rise in curb height from 9" to 10" - R.D.
12-16-59 Removed note for Red Concrete. W.E.B.
REV. 11-30-59 ~ CODE NO's. ADDED
Revised 8-28-59 Split Summary of Quantities for Non-participating & Project F-194(6) work
Revised 11-24-59 Reinforcement Bars for Proj. F-194(6) changed from 95,861 to 105,861 lbs.

ROUTE NO.	SEC.	COUNTY	TOTAL SHEETS	SHEET NO.
F.A. 194	5HB	WINNEBAGO	34	4
STA.	TO STA.			
FED. ROAD DIST. NO. 10 (ILLINOIS)		PROJ.		

For B.M. & Reference Points See Sheet 3

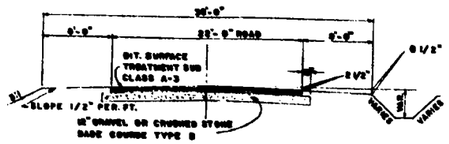

TYPICAL SECTION DETOUR ROAD

CONSTRUCTION SECTION B

CONTRACTOR FOR SECTION 5HB TO PLACE SIGN, STD. 2136, ALONG THE SOUTH SIDE OF HARRISON AVENUE AT A POINT WEST OF FA ROUTE 194 BETWEEN THE CROSS ROAD TO ROUTE 5 AND THE DETOUR ROAD AND ONE EAST OF FA ROUTE 194 ALONG THE NORTH SIDE OF SBI ROUTE 5 BEYOND THE END OF THE DETOUR, BOTH AS DIRECTED BY THE ENGINEER.

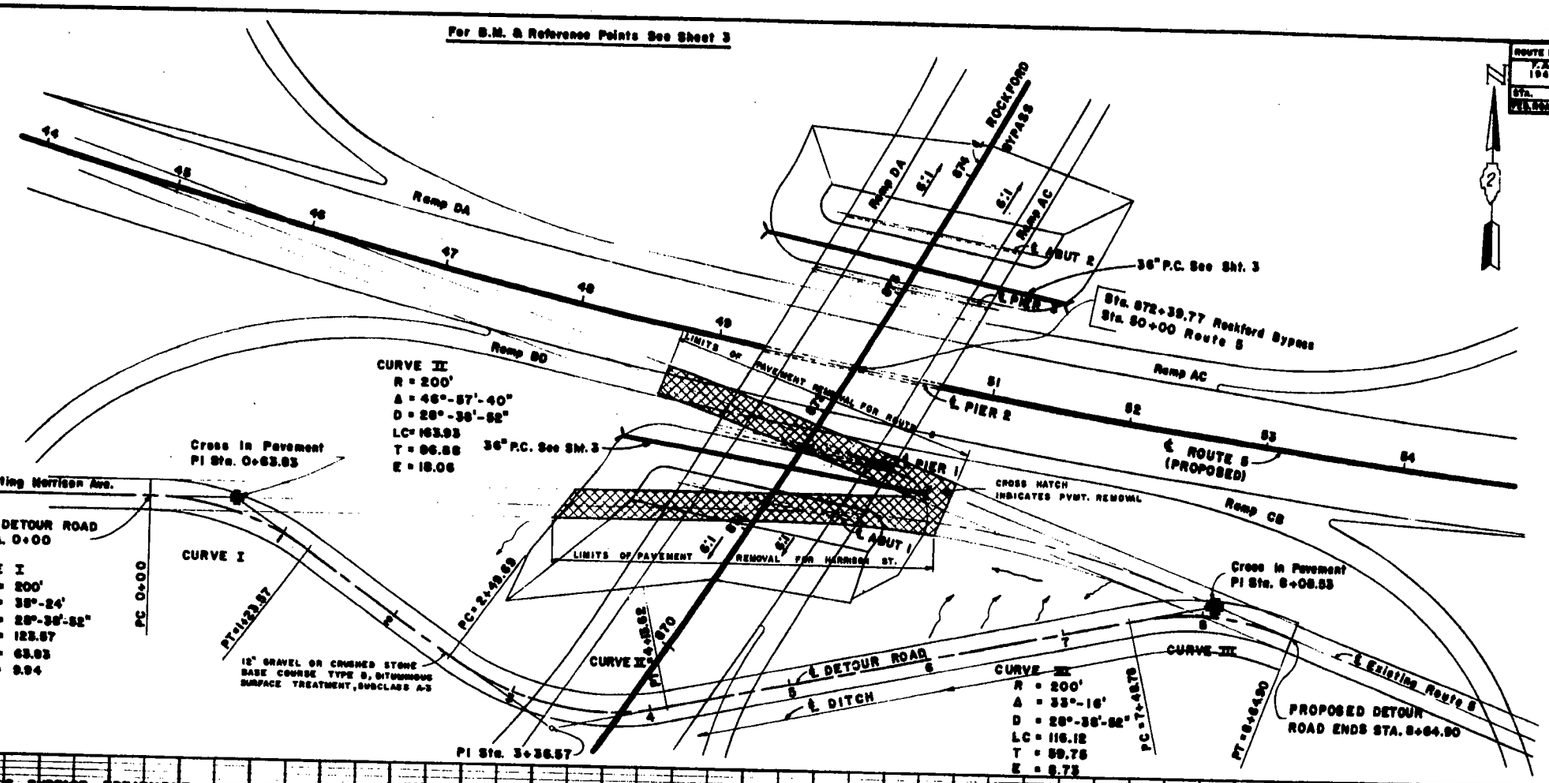

BITUMINOUS SURFACE TREATMENT, SUBCLASS A-3

Sand or Gravel Stone Base Course, Type B	242 Tons
Bituminous Material (Prime Coat)	297 Gal.
Bituminous Material (Cover & Seal Coat)	328 Gal.
Cover Coat Aggregate	32 Tons
Seal Coat Aggregate	12 Tons

PAVEMENT REMOVAL

Rt. 5 Existing Sta. 0+00 To Sta. 11+10	828 Sq. Yds.
Harrison St. Sta. 0+07 To Sta. 2+02	692 Sq. Yds.

Earth Excavation	2000 Cu. Yds.
Embankment	1982 Cu. Yds.
Use In Earth Bridge Embankment	600 Cu. Yds.

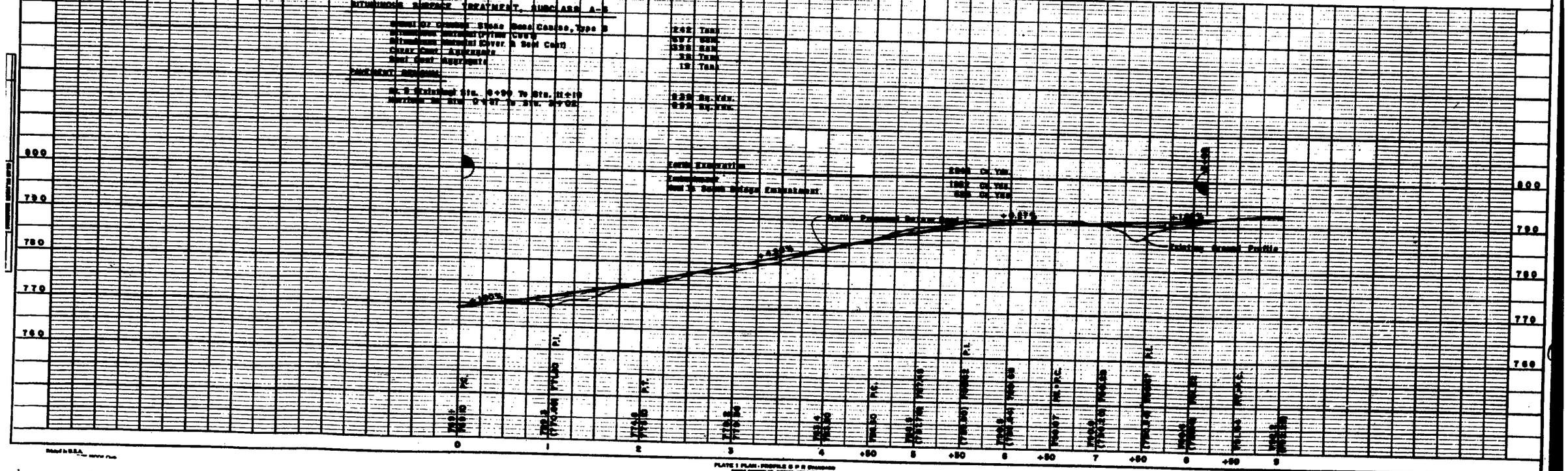

PLATE 1 PLAN - PROFILE S P R ENGINEER

ROUTE NO.	SEC	COUNTY	TOTAL SHEETS	SHEET NO.
FA 194	5HB	WINNEBAGO CO.	34	5
STA		TO STA.		
FED. ROAD DIST. NO. 7	ILLINOIS	PROJ		

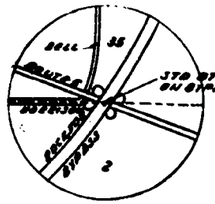

VICINITY MAP
T-43 N R-2 3RD P.M.

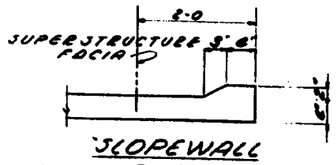

SLOPEWALL CURB

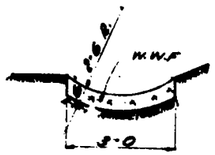

PAVED DITCH

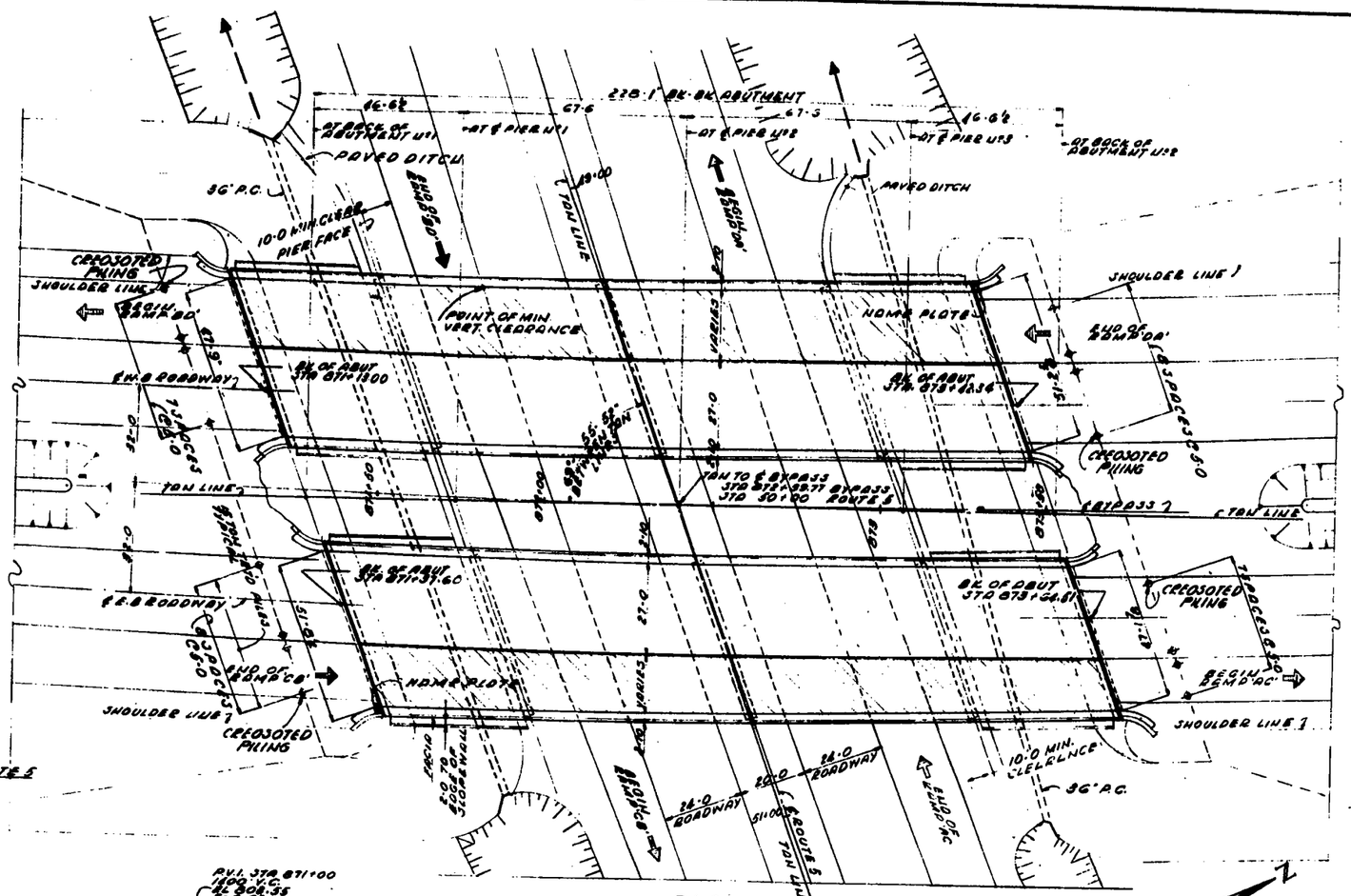

PL.G.N
SCALE 1:70'-0

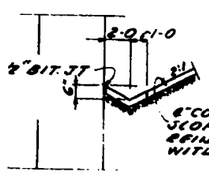

DITCH DETAIL AT PIER

CURVE DATA ROUTE 5
Δ 7°-53-38
D 0°-01'-00"
R 5729.65
T 392.03
E 70.57
L 1783.41
S 0.01 FT/FT

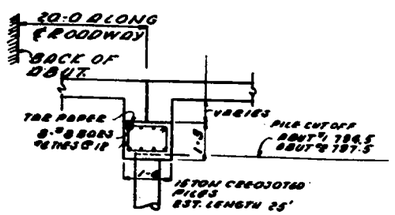

DETAIL 'A'

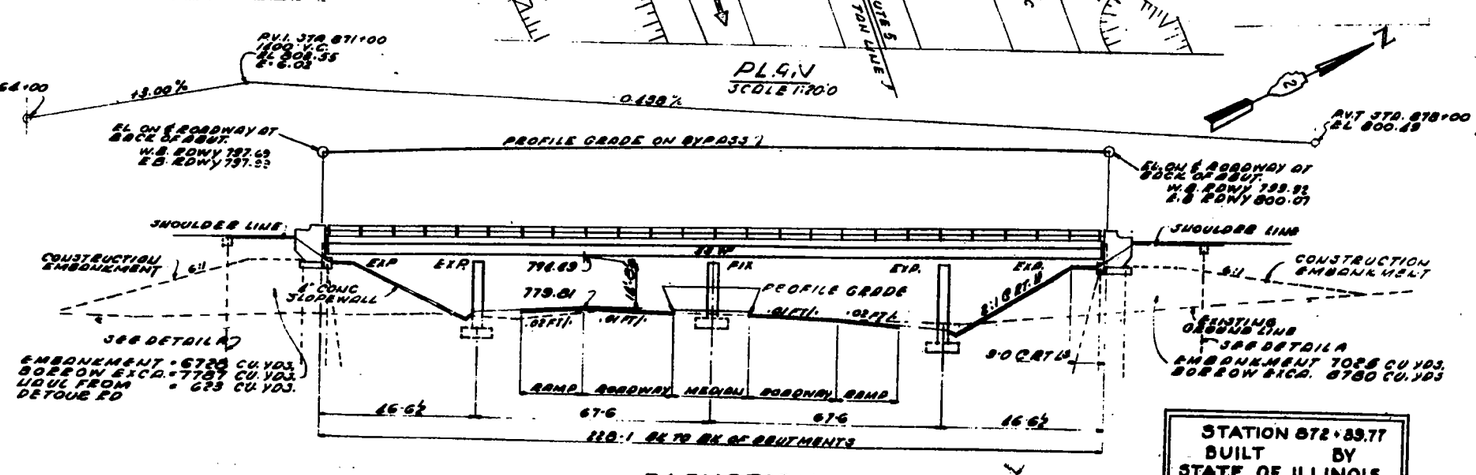

EMBANKMENT = 6720 CU. YDS.
BORROW EXCA. = 7787 CU. YDS.
HAUL FROM DETOUR RD = 623 CU. YDS.

EMBANKMENT 7026 CU. YDS.
BORROW EXCA. 8780 CU. YDS.

ELEVATION

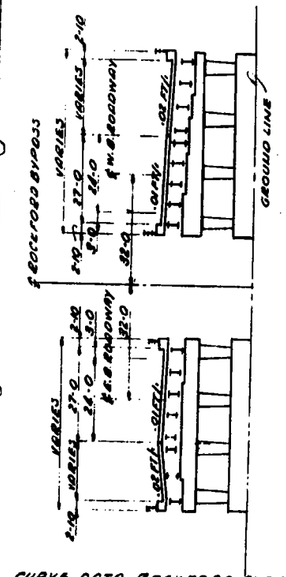

CURVE DATA, ROCKFORD BYPASS
Δ 17°-10'-00"
D 0°-50'-00
R 6875.5
T 1068.18
E 92.38
L 2120.00
S .01 FT/FT

SPECIFICATIONS
F.A.H.W.A. DATED 1957 STANDARD SPECIFICATIONS FOR ROAD AND BRIDGE CONSTRUCTION DATED JAN 2, 1958

LOADING
L.L. H20-S16-44
D.L. 20 P.S.F. WEARING SURFACE

STRESSES
CONCRETE n=10
f_c = 1400 P.S.I. SUBSTRUCTURE
f_c = 1000 P.S.I. SUPERSTRUCTURE WITH ADEQUATE PRESSURE
f_c = 1000 P.S.I. WITHOUT ADEQUATE PRESSURE
f_s = 20,000 P.S.I. ALLOWABLE SHEAR IN PIER PIGS
STEEL
STRUCTURAL 18000 P.S.I.
REINFORCEMENT 20000 P.S.I.

STATION 872+39.77
BUILT BY
STATE OF ILLINOIS
F.A. RT. 194 SEC. 5HB
F.A. PROJ. F-284(6)
LOADING H20-S16

NOSE PLATE
STATE OF ILL. STD. 2138

12-16-59 Removed note for Red Concrete. W.E.D.

ILLINOIS DIVISION OF HIGHWAYS
ROCKFORD BYPASS
F. A. ROUTE 194
PROJECT _____ SECTION 5HB
WINNEBAGO COUNTY
GENERAL PLAN
Designed By: [illegible] Drawn By: [illegible] Checked By: [illegible]

ROUTE NO.	SEC.	COUNTY	TOTAL SHEETS	SHEET NO.
F.A.194	5HB	WINNEBAGO	34	6

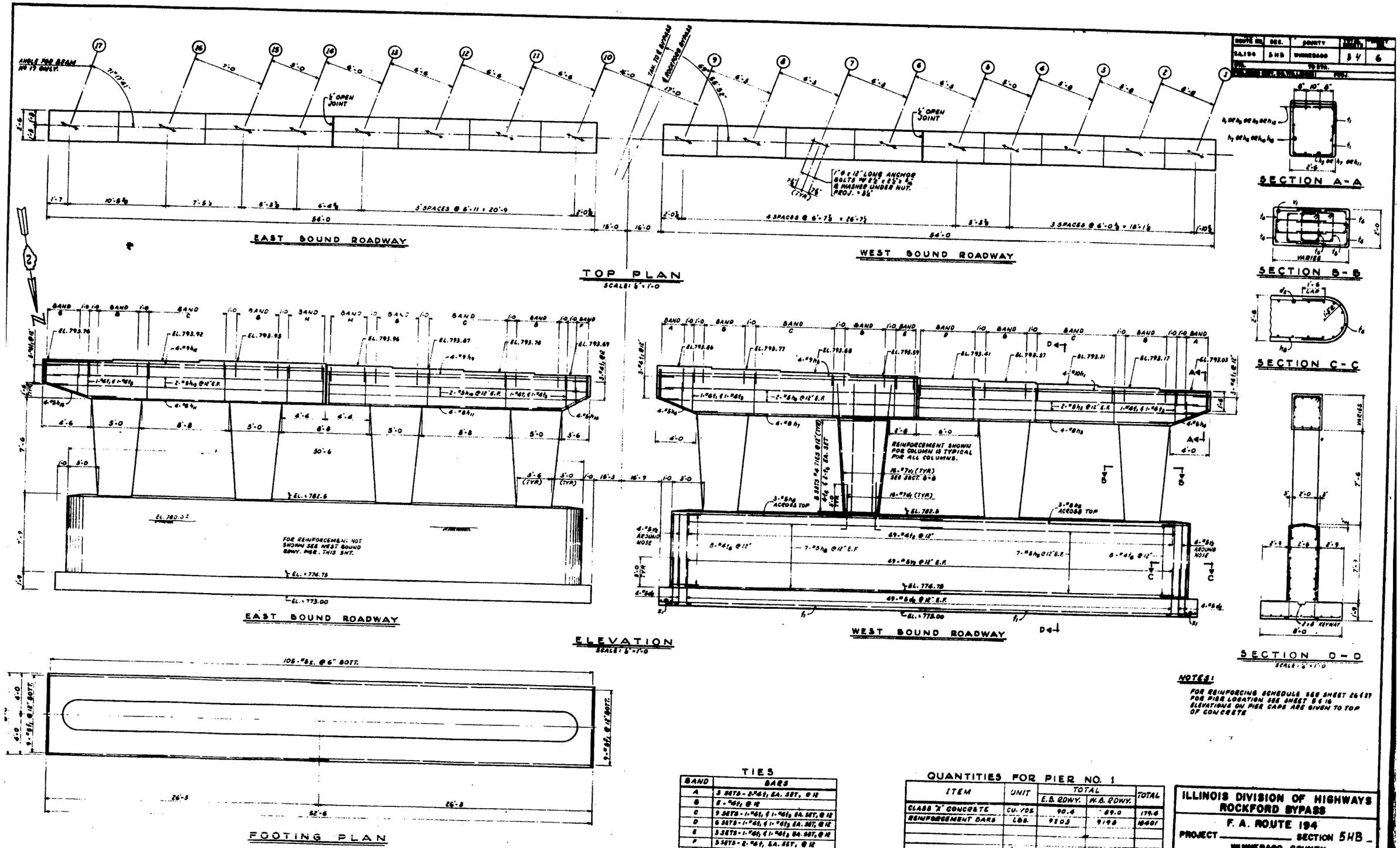

NOTES:

FOR REINFORCING SCHEDULE SEE SHEET 26 & 27
FOR PIER LOCATION SEE SHEET 5 & 16
ELEVATIONS ON PIER CAPS ARE GIVEN TO TOP OF CONCRETE

TIES

BAND	BARS
A	3 SETS - 2-#6t1 EA. SET, @ 12
B	8 - #6t1 @ 12
C	9 SETS - 1-#6t1 & 1-#6t2 EA. SET, @ 12
D	6 SETS - 1-#6t1 & 1-#6t2 EA. SET, @ 12
E	3 SETS - 1-#6t1 & 1-#6t2 EA. SET, @ 12
F	3 SETS - 2-#6t1 EA. SET, @ 12
G	6 SETS - 2-#6t1 EA. SET, @ 12
H	8 SETS - 1-#6t1 & 1-#6t2 EA. SET, @ 12

QUANTITIES FOR PIER NO. 1

ITEM	UNIT	TOTAL E.B. RDWY.	TOTAL W.B. RDWY.	TOTAL
CLASS "X" CONCRETE	CU. YDS.	90.4	89.0	179.4
REINFORCEMENT BARS	LBS.	9203	9198	18401

ILLINOIS DIVISION OF HIGHWAYS
ROCKFORD BYPASS

F. A. ROUTE 194
PROJECT _____ SECTION 5HB
WINNEBAGO COUNTY

PIER 1

Designed By: E.S. | Drawn By: G.B.G. | Checked By: R.E.

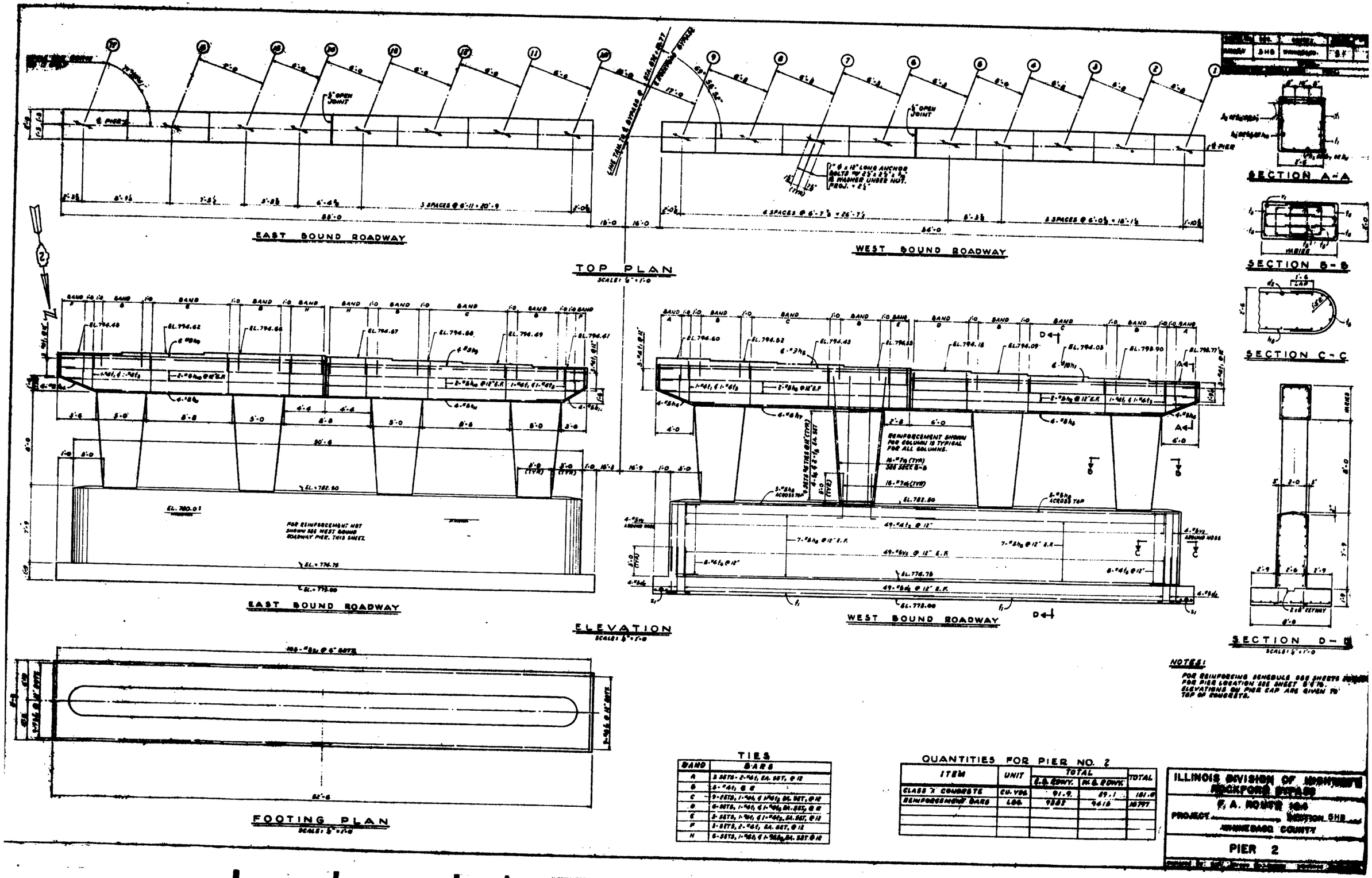
EAST BOUND ROADWAY
WEST BOUND ROADWAY
TOP PLAN
SCALE: 1/8" = 1'-0"
SECTION A-A
SECTION B-B
SECTION C-C
SECTION D-D
SCALE: 1/4" = 1'-0"
ELEVATION
SCALE: 1/8" = 1'-0"
FOOTING PLAN
SCALE: 1/8" = 1'-0"
NOTES:
FOR REINFORCING SCHEDULE SEE SHEETS
FOR PIER LOCATION SEE SHEET
ELEVATIONS ON PIER CAP ARE GIVEN TO TOP OF CONCRETE.
TIES
QUANTITIES FOR PIER NO. 2
ILLINOIS DIVISION OF HIGHWAYS
ROCKFORD BYPASS
F. A. ROUTE
PROJECT
SECTION
WINNEBAGO COUNTY
PIER 2

ROUTE NO.	SEC.	COUNTY	TOTAL SHEETS	SHEET NO.
F.A. 194	2 HB	WINNEBAGO	34	8

STA. TO STA.

F.A. ROUTE DIST. CO. ILLINOIS PROJ.

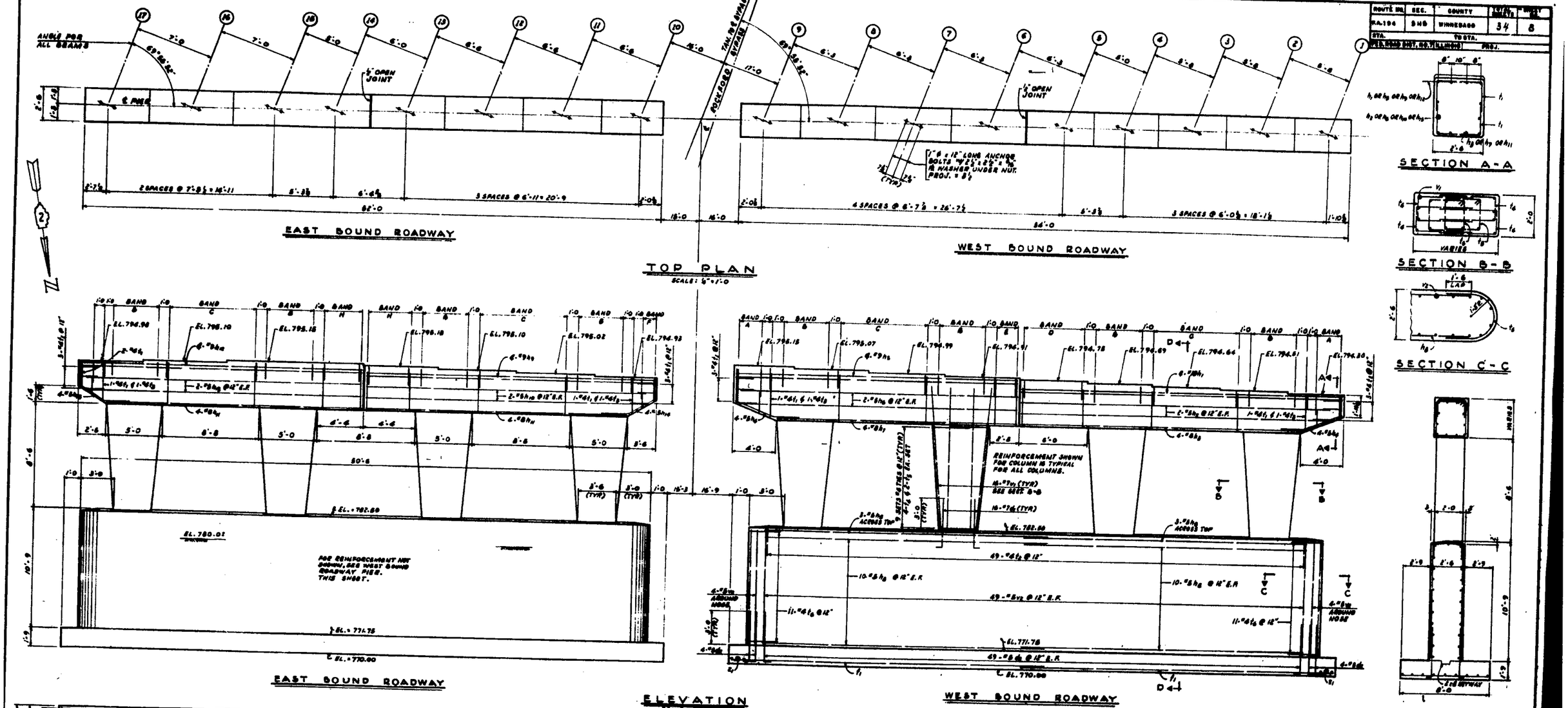

NOTES:

FOR REINFORCING SCHEDULE SEE SHEETS 16 & 19.
FOR PIER LOCATION SEE SHEETS 5 & 10.
ELEVATIONS ON PIER CAP ARE GIVEN TO TOP OF CONCRETE.

TIES

BAND	BARS
A	5 SETS - 2-#6 EA. SET, @ 12
B	8-#6 @ 12"
C	9 SETS - 1-#6, & 1-#6 EA. SET, @ 12
D	6 SETS - 1-#6, & 1-#6 EA. SET, @ 12
E	3 SETS - 1-#6, & 1-#6 EA. SET, @ 12
F	5 SETS - 2-#6 EA. SET @ 12
H	5 SETS - 1-#6, & 1-#6 EA. SET, @ 12

QUANTITIES FOR PIER NO. 3

ITEM	UNIT	TOTAL E.B. RDWY.	TOTAL W.B. RDWY.	TOTAL
CLASS "X" CONCRETE	CU. YDS.	105.9	105.2	211.1
REINFORCEMENT BARS	LBS.	10080	10149	20229

ILLINOIS DIVISION OF HIGHWAYS
ROCKFORD BYPASS

F. A. ROUTE 194 SECTION 2 HB

PROJECT _____

WINNEBAGO COUNTY

PIER 3

Designed By: E.B. Drawn By: G.H.K. Checked By: E.B.

ROUTE NO.	SEC.	COUNTY	TOTAL SHEETS	SHEET NO.
F.A. 194	5HB	WINNEBAGO	34	9

STA. TO STA.

ILLINOIS 2000 CONV. NO. 31 ILLINOIS PROJ.

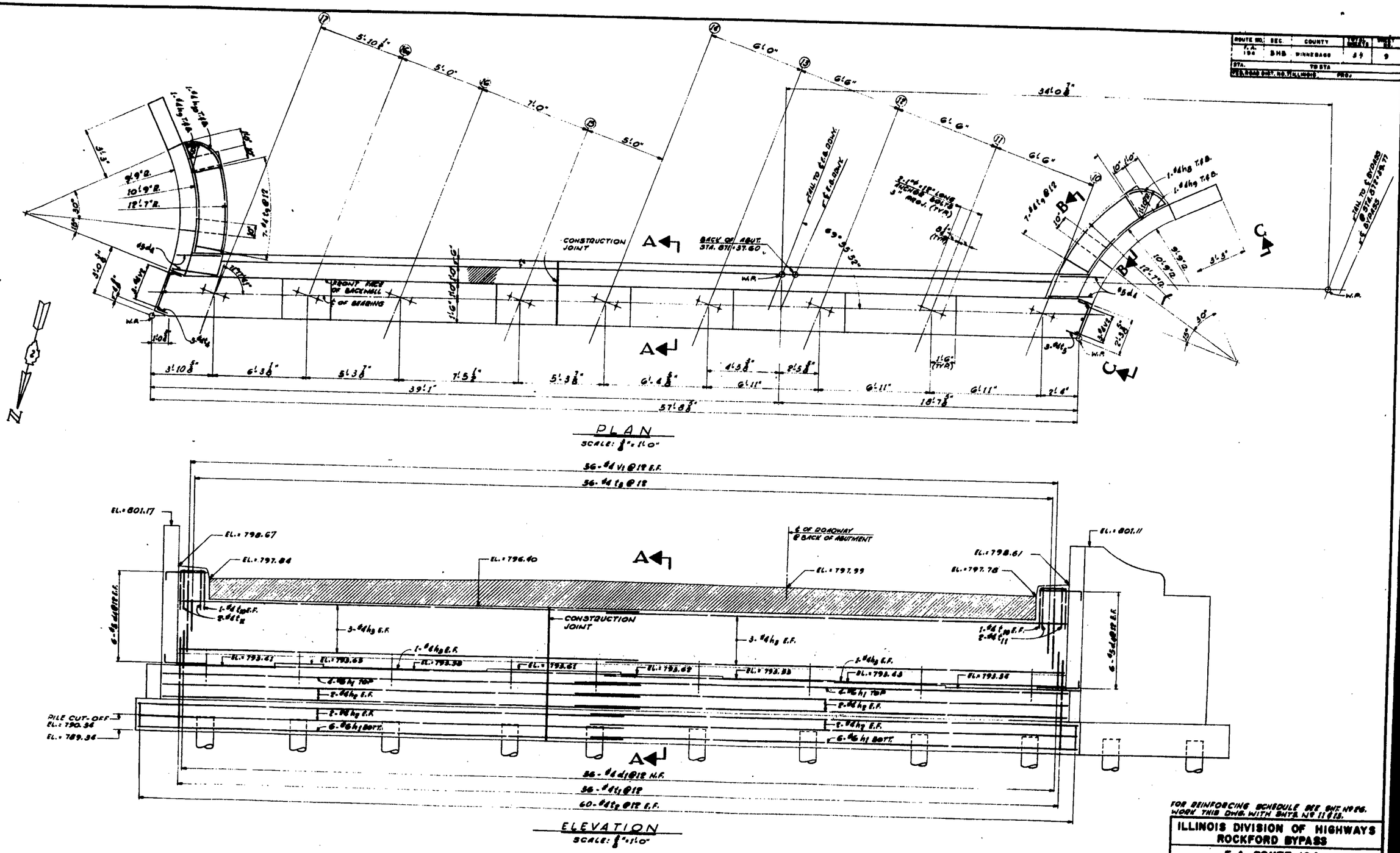

FOR REINFORCING SCHEDULE SEE SHT. NO. 26.
WORK THIS DWG. WITH SHTS. NO. 11 & 13.

ILLINOIS DIVISION OF HIGHWAYS
ROCKFORD BYPASS

F. A. ROUTE 194

PROJECT _____ SECTION 5HB

WINNEBAGO COUNTY

PLAN AND ELEVATION
ABUTMENT 1 E.B. RDWY

Designed By: E.S. | Drawn By: J.B.M. | Checked By: [illegible]

Revised: 12-10-59
Changes in Elevations - R.D.

ROUTE NO.	SEC.	COUNTY	TOTAL SHEETS	SHEET NO.
F.A. 194	SHB	WINNEBAGO	34	10

STA. TO STA.

FED. ROAD DIST. NO. 7 ILLINOIS PROJ.

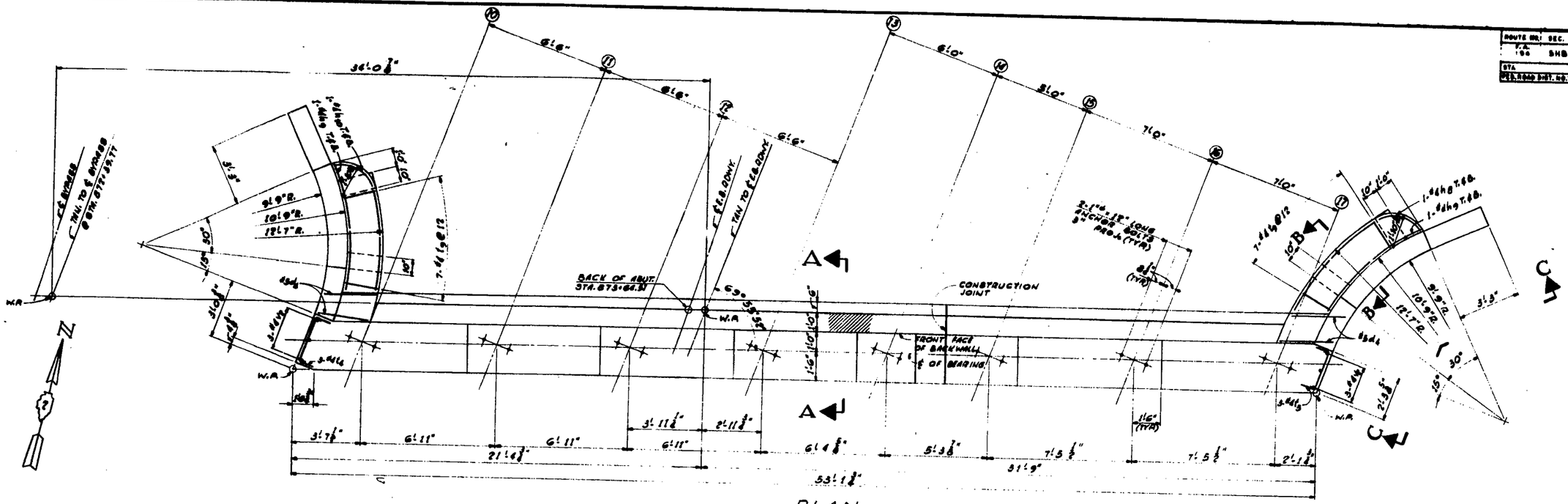

PLAN

SCALE: 3/8" = 1'-0"

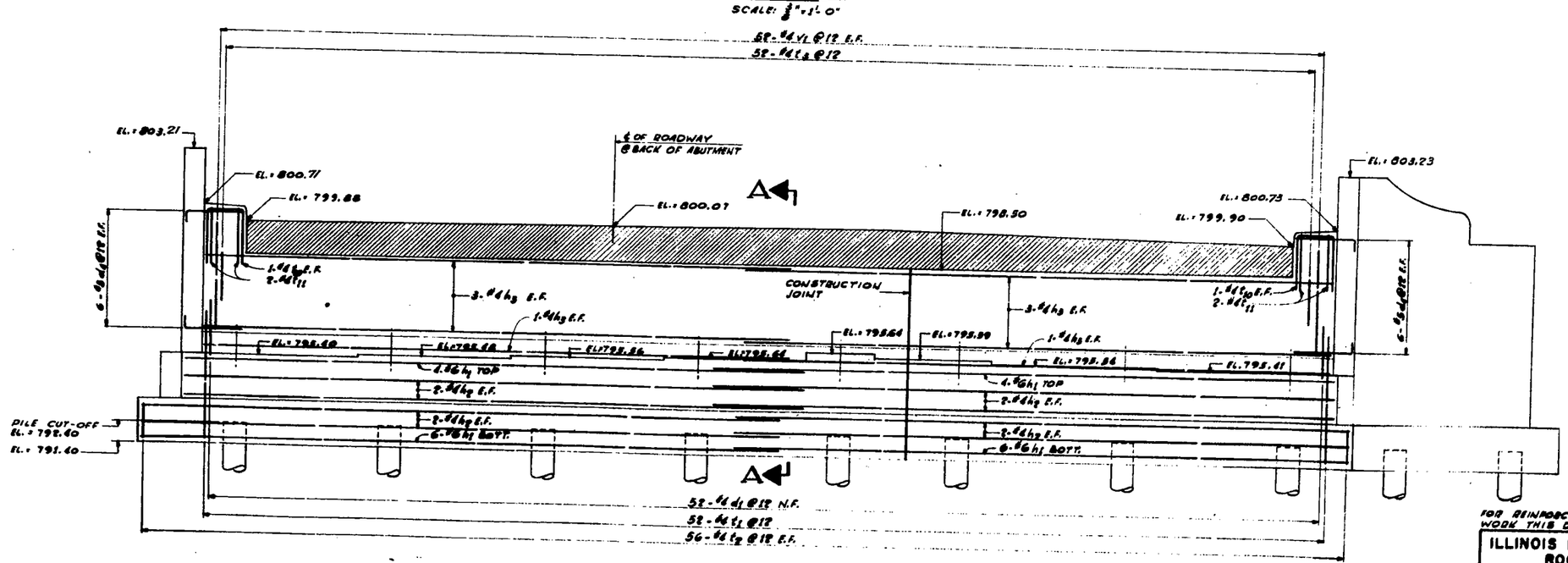

ELEVATION

SCALE: 3/8" = 1'-0"

FOR REINFORCING SCHEDULE SEE SHT. NO. 26. WORK THIS DWG. WITH SHTS. NO. 11 & 18.

ILLINOIS DIVISION OF HIGHWAYS
ROCKFORD BYPASS

F.A. ROUTE 194

PROJECT _____ SECTION SHB

WINNEBAGO COUNTY

PLAN AND ELEVATION
ABUTMENT 2 E.B. RDWY

Designed By: E.S. | Drawn By: J.E.M. | Checked By: [illegible]

Revised 12-10-59. Elev. Changed - R.D.

ROUTE NO.	SEC.	COUNTY	TOTAL SHEETS	SHEET NO.
F.A. 194	SHB	WINNEBAGO	34	11

STA. TO STA.

F.E.D. ROAD DIST. NO. 7 ILLINOIS PRO.

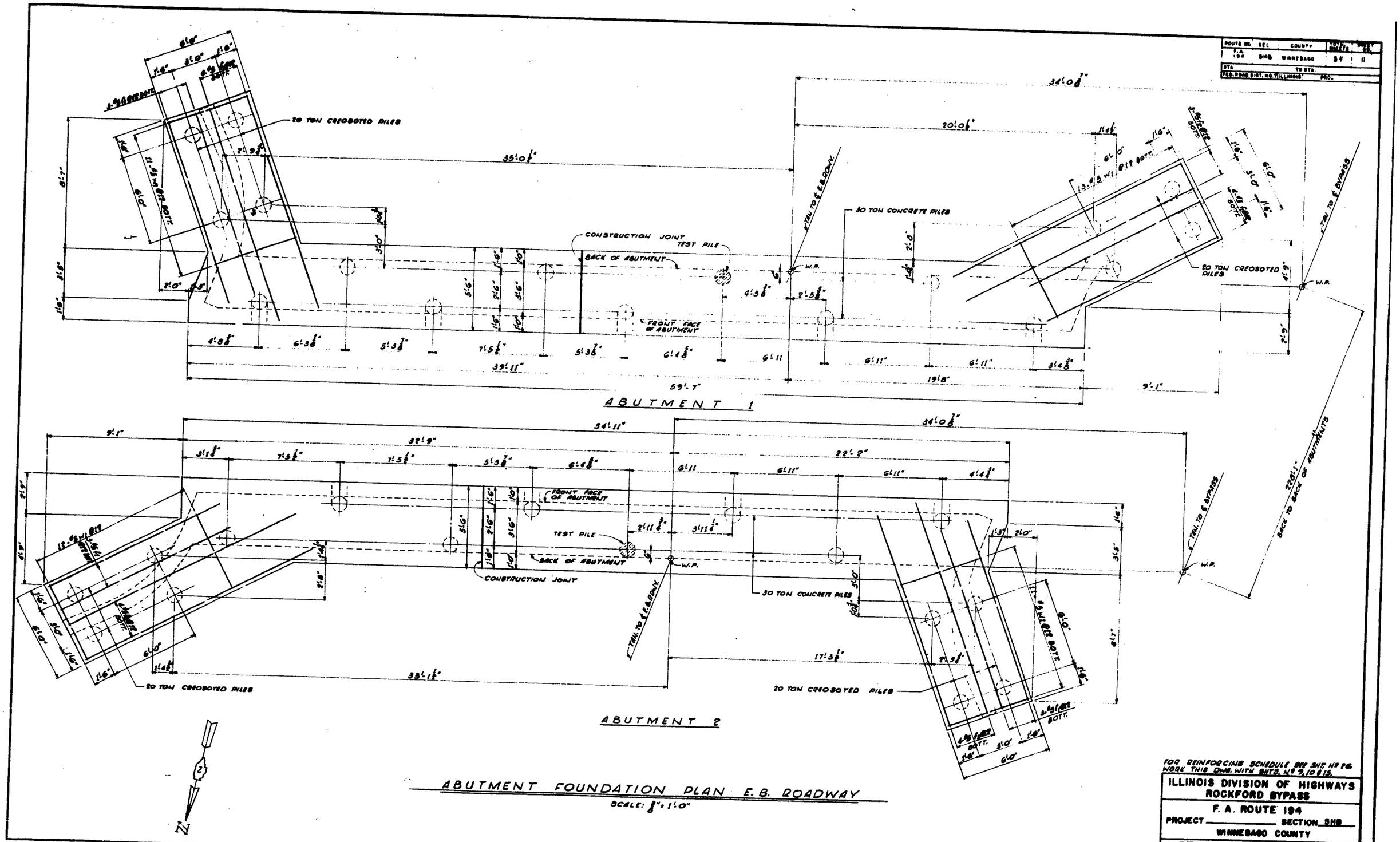

FOR REINFORCING SCHEDULE SEE SHT. No 8 & WORK THIS DWG. WITH SHTS. No 9, 10 & 15.

ILLINOIS DIVISION OF HIGHWAYS
ROCKFORD BYPASS

F. A. ROUTE 194

PROJECT _____ SECTION SHB

WINNEBAGO COUNTY

FTG PLAN-ABUTMENTS 1 & 2 E.B. RDWY

Designed By: G.S. Drawn By: J.B.M. Checked By: F.K.

ROUTE NO.	SEC	COUNTY	TOTAL SHEETS	SHEET NO.
F.A. 94	SHB	WINNEBAGO	34	12

STA. TO STA.

FED. ROAD DIST. NO. 7 ILLINOIS PROJ.

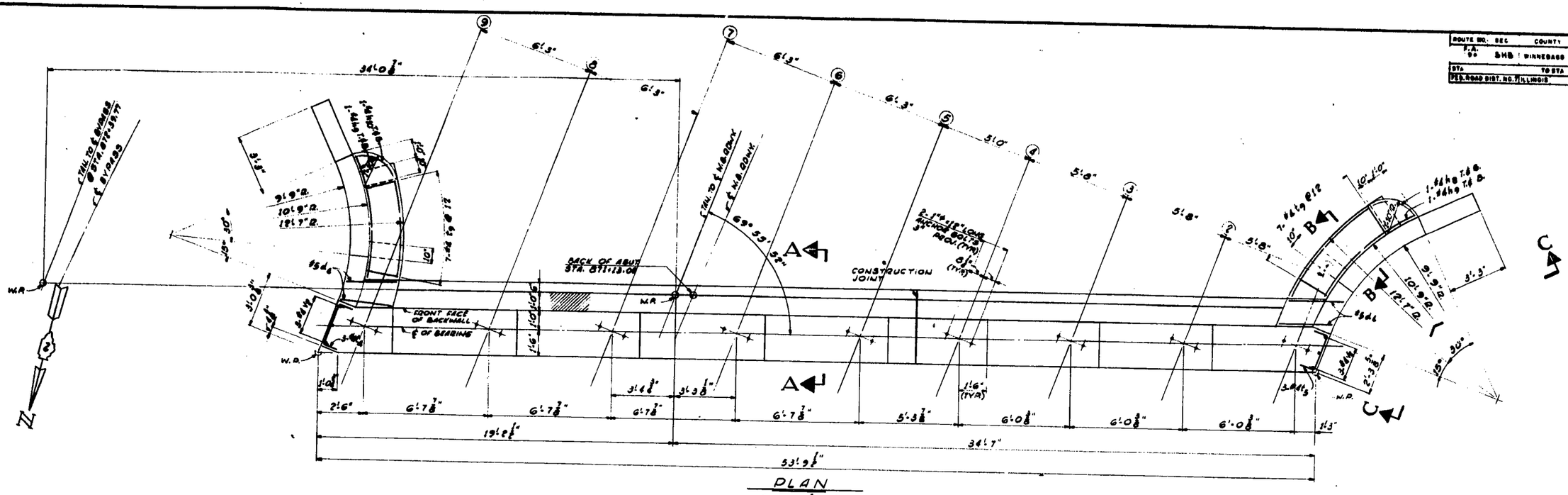

FOR REINFORCING SCHEDULE SEE SHT. NO 27. WORK THIS DWG. WITH SHTS. NO 16 & 18.

ILLINOIS DIVISION OF HIGHWAYS
ROCKFORD BYPASS

F A ROUTE 194

PROJECT _____ SECTION SHB

WINNEBAGO COUNTY

PLAN AND ELEVATION ABUTMENT 1 W.B. RDWY

Designed By E.S. | Drawn By J.G.M.F. | Checked By P.R.

Revised: 12-10-59: Changes in Elev. R.D.

ROUTE NO.	SEC	COUNTY	TOTAL SHTS	SHT NO.
F.A. 194	5HB	WINNEBAGO	84	13
STA	TO STA			
FED. ROAD DIST. NO. 7	ILLINOIS	PROJ.		

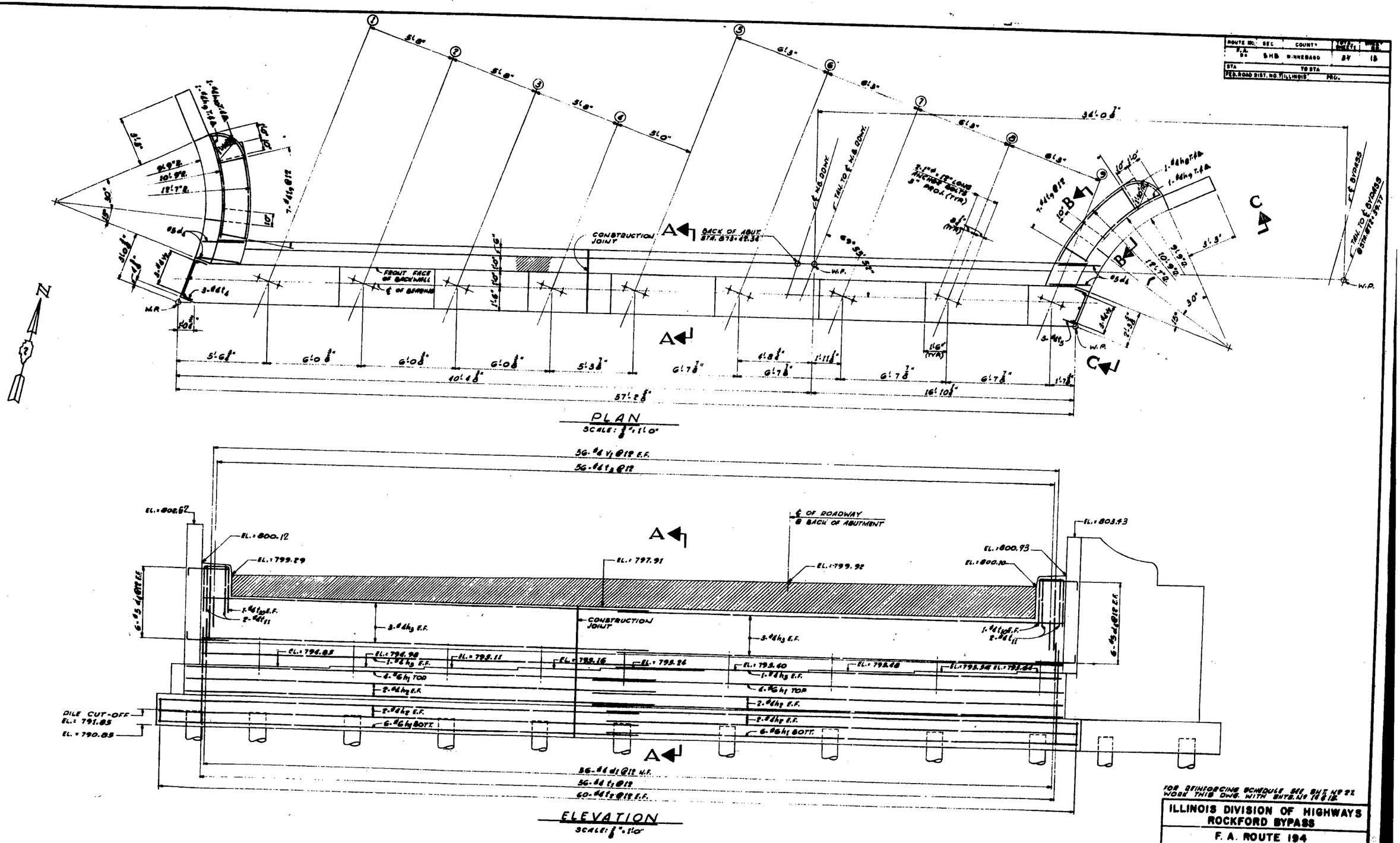

ILLINOIS DIVISION OF HIGHWAYS
ROCKFORD BYPASS

F. A. ROUTE 194

PROJECT _____ SECTION 5HB

WINNEBAGO COUNTY

PLAN AND ELEVATION
ABUTMENT 2 W.B. RDWY

Designed By: E.S. | Drawn By: J.B.M. | Checked By: R.R.

Revised: 12-10-59 Elev. changed - R.D.

ROUTE NO.	SEC.	COUNTY	TOTAL SHEETS	SHEET NO.
F.A. 194	SHB	WINNEBAGO	84	14
STA.	TO STA.			
ILL. ROAD DIST. NO. 17			PROJ.	

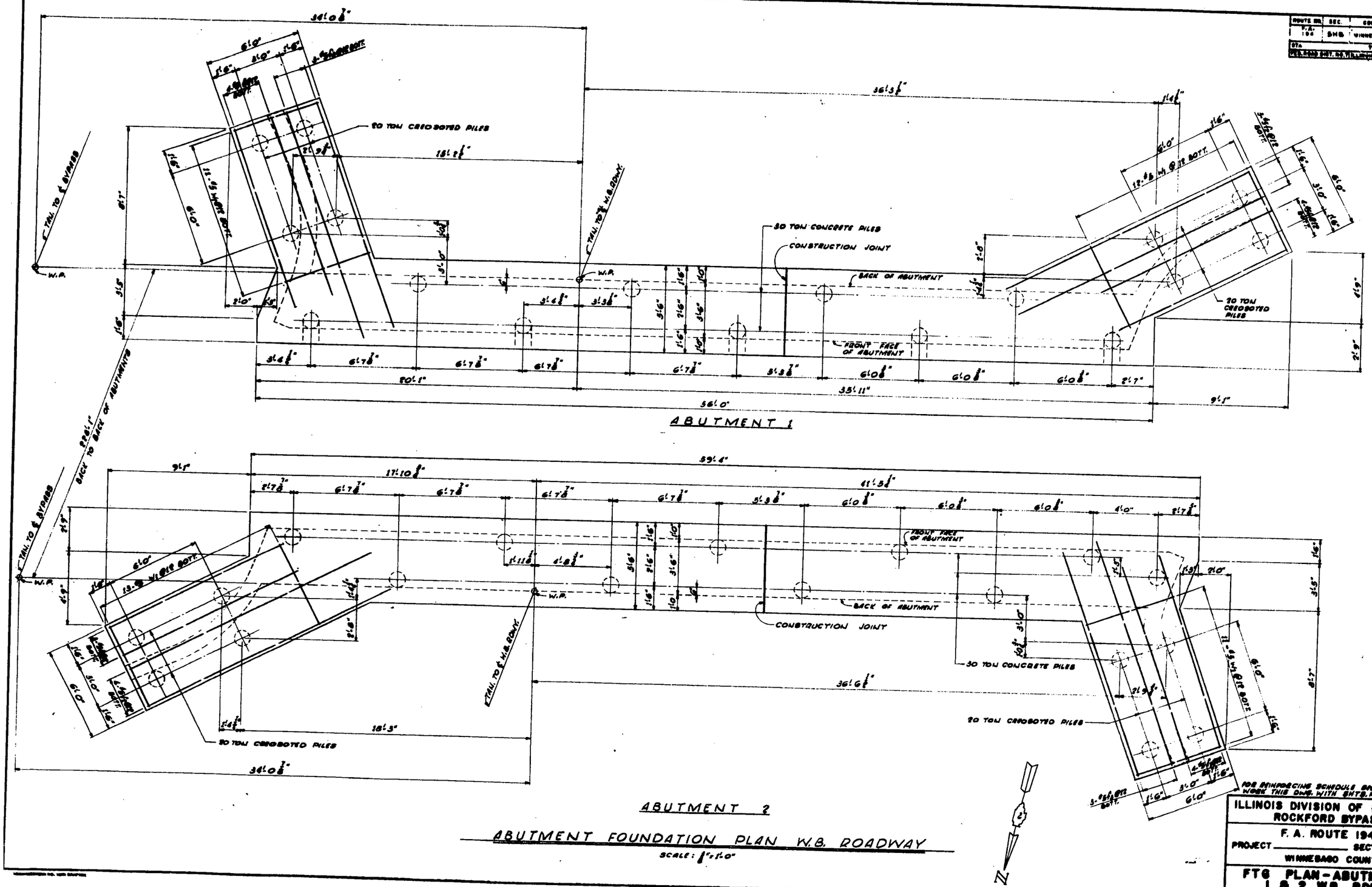

ABUTMENT FOUNDATION PLAN W.B. ROADWAY

SCALE: 1" = 1'-0"

FOR REINFORCING SCHEDULE SEE SHT. No 92 WORK THIS DWG. WITH SHTS. No 10, 13 & 18.

ILLINOIS DIVISION OF HIGHWAYS
ROCKFORD BYPASS

F. A. ROUTE 194

PROJECT _____ SECTION SHB

WINNEBAGO COUNTY

FTG PLAN - ABUTMENTS 1 & 2 W.B. RDWY

Designed By: W.S. | Drawn By: J.B.M. | Checked By: [illegible]

ROUTE NO.	SEC.	COUNTY	TOTAL SHTS.	SHT. NO.
F.A. 194	S-HB	WINNEBAGO	54	16
STA.	TO STA.			
U.S. ROUTE SHT. NO.	ILLINOIS		PROJ.	

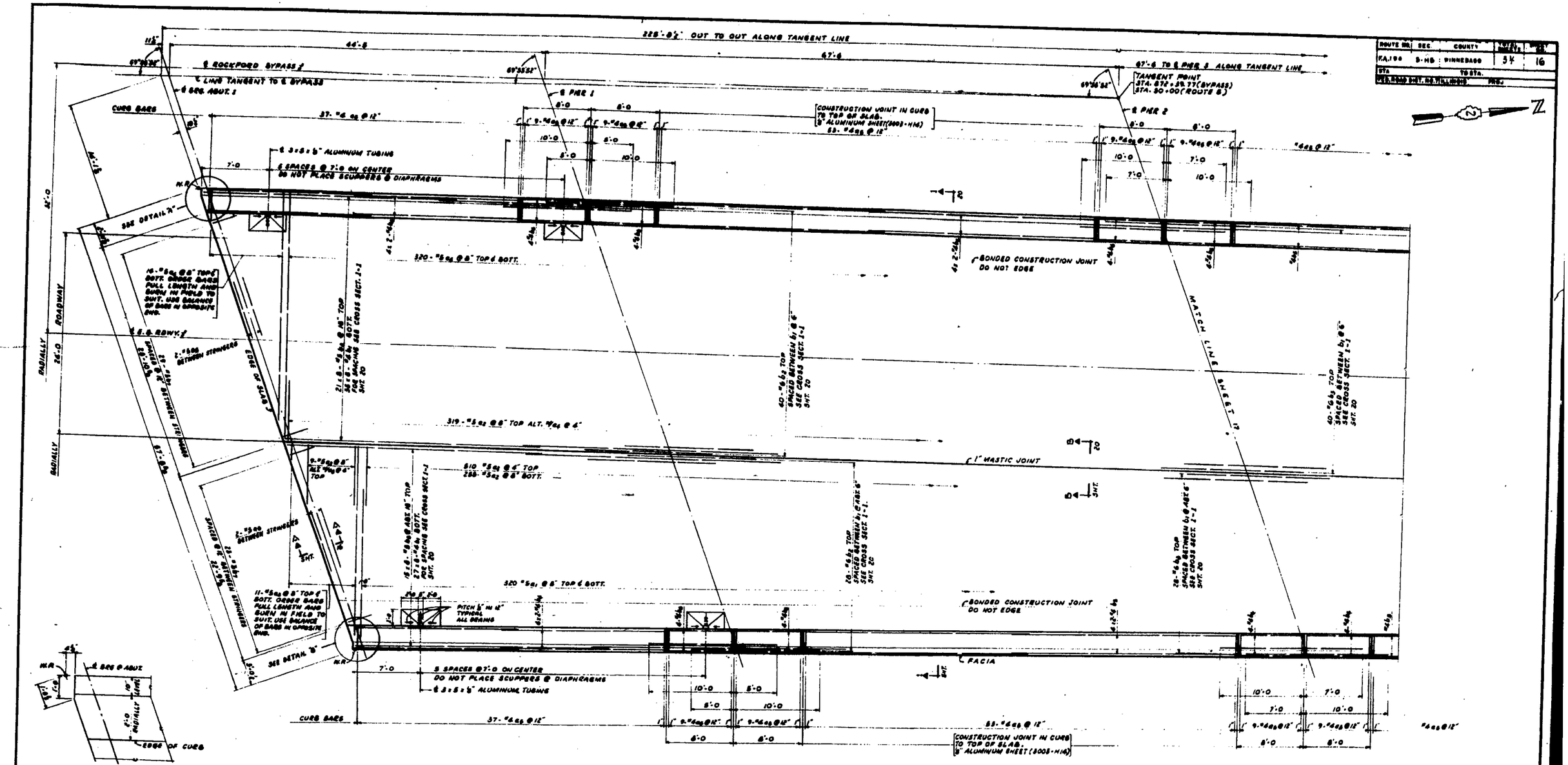

DETAIL "A"

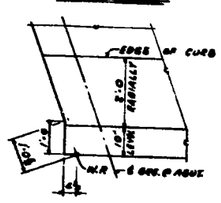

DETAIL "B"

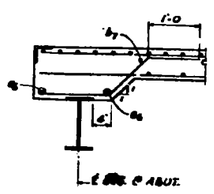

SECTION A-A

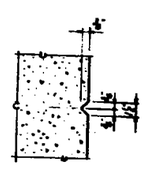

SCORE DETAIL

BARS DESIGNATED b_4, b_5 & b_6 SHALL NOT PASS THRU CONSTRUCTION JOINTS.
BARS DESIGNATED 4 ± 2-#4 INDICATES THAT THERE ARE 4 ROWS AND EACH ROW CONTAINS 2 LENGTHS OF BARS.

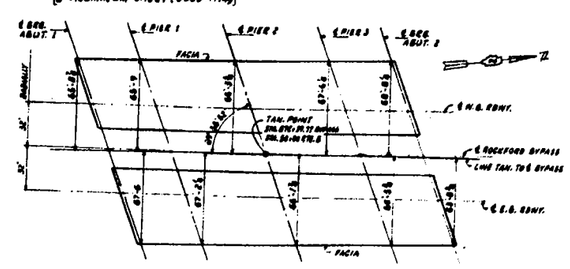

OFFSET DIMENSIONS FOR DECK

NOTES:

FOR GENERAL NOTES SEE SHEET 2.
FOR CROSS SECTIONS SEE SHEET 20.
FOR REINFORCING DETAILS, SEE SCHEDULE, SHEET 26.
WORK THIS DRWG. WITH SHEET 17 & 20.

ILLINOIS DIVISION OF HIGHWAYS
ROCKFORD BYPASS

F.A. ROUTE 194

PROJECT _____ SECTION SHB

WINNEBAGO COUNTY

DECK PLAN - PART I
FOR EB. RDWY

Designed By: E.S. | Drawn By: G.H.G. | Checked By: F.K.G.

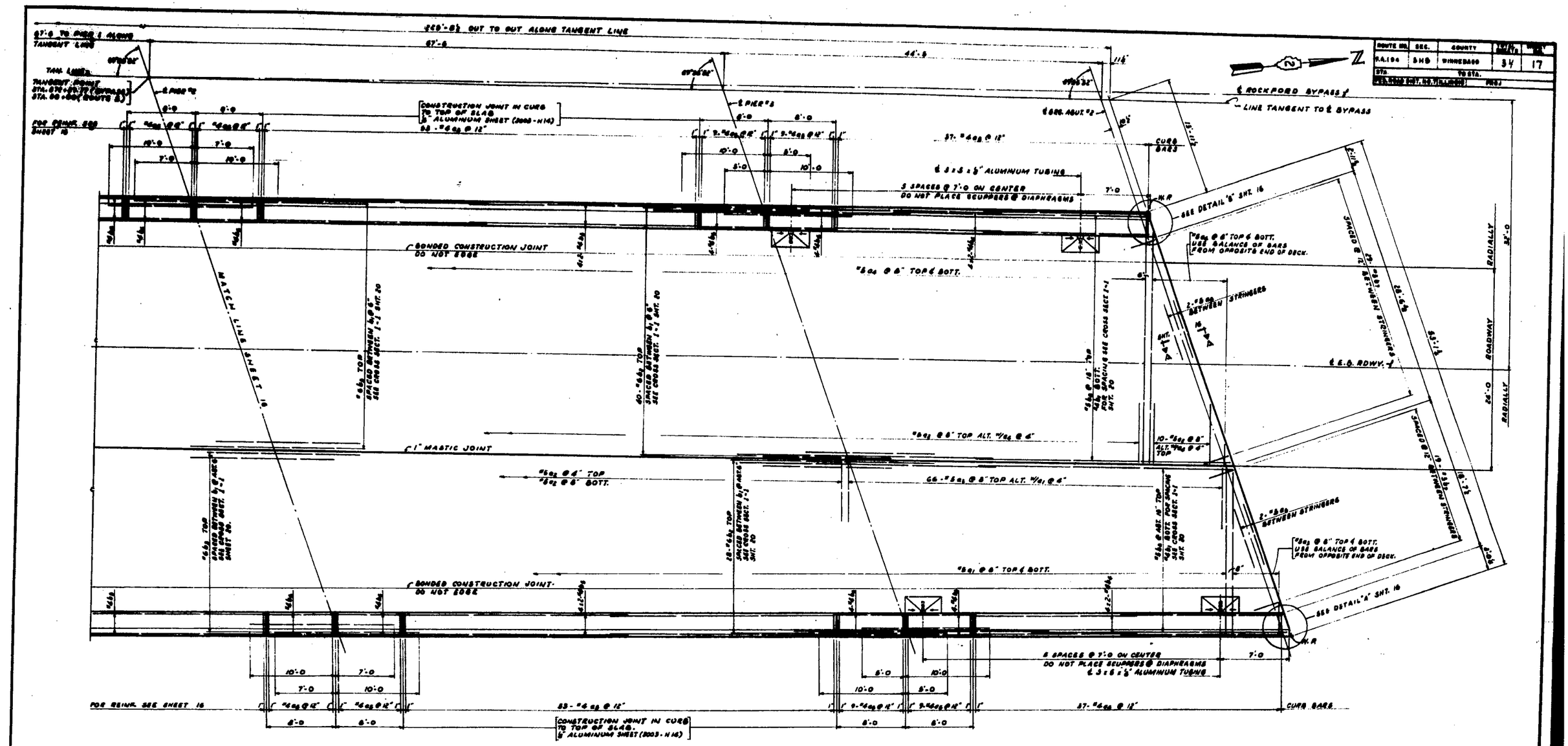

ROUTE NO.	SEC.	COUNTY	SHEET NO.	TOTAL SHEETS
F.A.194	SHB	WINNEBAGO	34	17
STA.		TO STA.		

NOTES:

FOR GENERAL NOTES SEE SHEET 2.
FOR CROSS SECTIONS SEE SHEET 20.
FOR REINFORCING DETAILS, SEE SCHEDULE, SHT. 16.
WORK THIS DRWG. WITH SHEET 16 & 20.

ILLINOIS DIVISION OF HIGHWAYS
ROCKFORD BYPASS

F. A. ROUTE 194
PROJECT _____ SECTION SHB
WINNEBAGO COUNTY

DECK PLAN-PART 2
FOR E.B. RDWY

Designed By: E.S. | Drawn By: GMB | Checked By: F.F.A.

ROUTE NO.	SEC.	COUNTY	TOTAL SHEETS	SHEET NO.
FA 194	5HB	WINNEBAGO	34	18
STA.		TO STA.		
ILLINOIS FED. AID PROJECT			REV.	

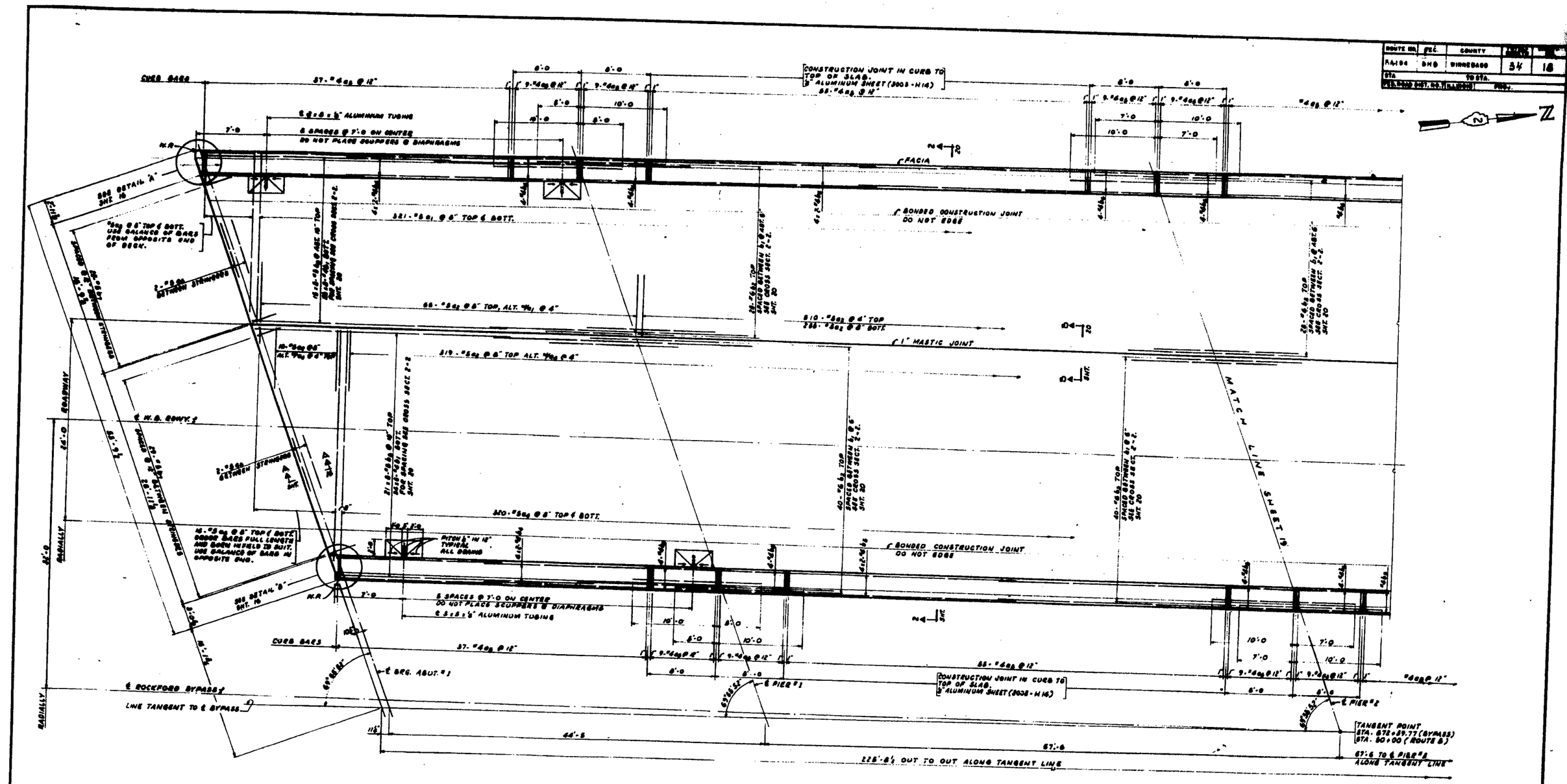

NOTES:

FOR GENERAL NOTES SEE SHEET 2.

FOR CROSS SECTIONS SEE SHEET 20.

FOR REINFORCING DETAILS SEE SCHEDULE, SHT. 27.

WORK THIS DRWG. WITH SHEETS 16, 19 & 20.

ILLINOIS DIVISION OF HIGHWAYS
ROCKFORD BYPASS

F. A. ROUTE 194

PROJECT _____ SECTION 5HB

WINNEBAGO COUNTY

DECK PLAN - PART I
FOR W.B. RDWY

Designed By: E.E. | Drawn By: [illegible] | Checked By: [illegible]

ROUTE NO.	SEC.	COUNTY	TOTAL SHEETS	SHEET NO.
FA-194	5HS	WINNEBAGO	54	19

TO STA.

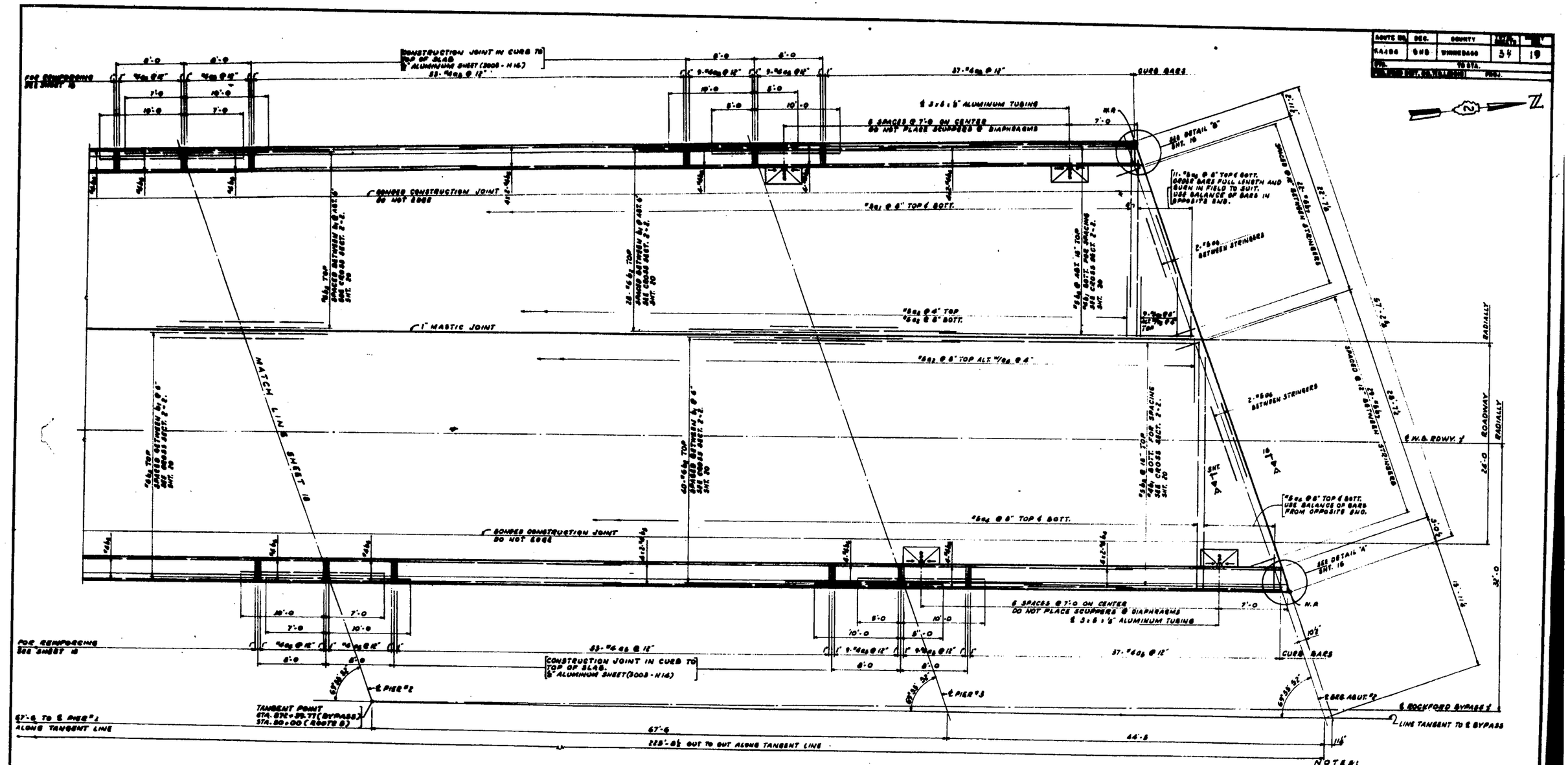

NOTES:

FOR GENERAL NOTES SEE SHEET 2.

FOR CROSS SECTIONS SEE SHEET 20.

FOR REINFORCING DETAILS SEE SCHEDULE, SHEET 27

WORK THIS DRWG. WITH SHEETS 16, 18 & 20.

ILLINOIS DIVISION OF HIGHWAYS
ROCKFORD BYPASS

F. A. ROUTE 194

PROJECT _____ SECTION 5HS

WINNEBAGO COUNTY

DECK PLAN - PART 2
FOR W.B. RDWY

Designed By: E.A. | Drawn By: G.M.G. | Checked By: F.P.K.

ROUTE NO.	SEC.	COUNTY	TOTAL SHEETS	SHEET NO.
F.A. 194	5-HB	WINNEBAGO	34	20
STA.		TO STA.		
ALTERNATE ROUTE, U.S. ILLINOIS			PROJ.	

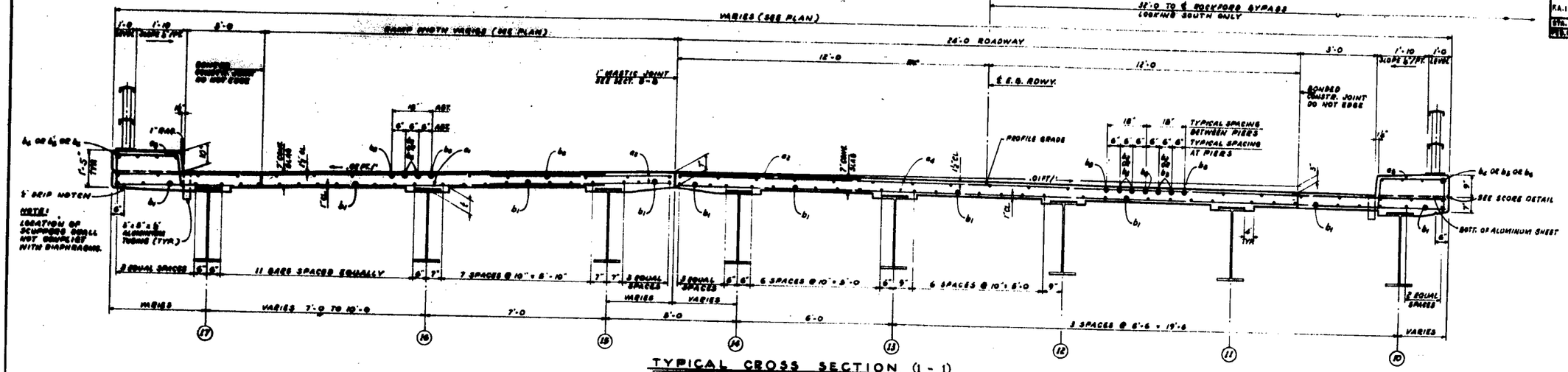

TYPICAL CROSS SECTION (1 - 1)

EAST BOUND ROADWAY

SCALE: ½" = 1'-0

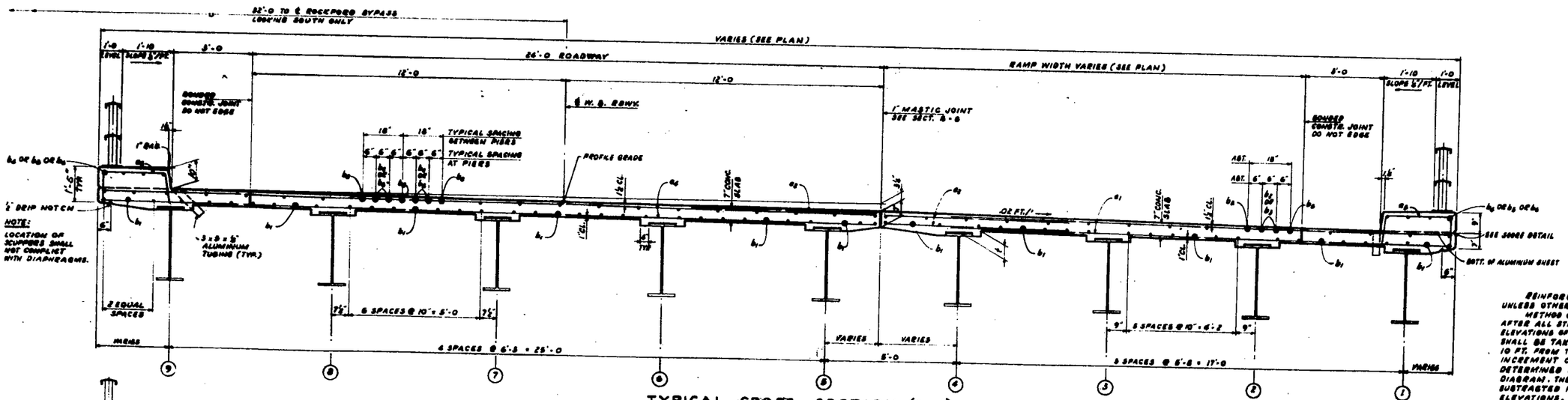

TYPICAL CROSS SECTION (2 - 2)

WEST BOUND ROADWAY

SCALE: ½" = 1'-0

NOTES

REINFORCING STEEL TO HAVE 1½" COVER UNLESS OTHERWISE NOTED.

METHOD OF DETERMINING FILLET HEIGHTS 7" AFTER ALL STRUCTURAL STEEL HAS BEEN ERECTED, ELEVATIONS OF THE TOP FLANGES OF THE BEAMS SHALL BE TAKEN AT INTERVALS NOT TO EXCEED 10 FT. FROM THESE ELEVATIONS SUBTRACT THE INCREMENT OF DEFLECTION FOR THESE POINTS, DETERMINED FROM THE D.L. DEFLECTION DIAGRAM. THE ELEVATIONS, SO OBTAINED SUBTRACTED FROM THE THEORETICAL GRADE ELEVATIONS, MINUS SLAB THICKNESS, EQUALS THE FILLET HEIGHTS ABOVE TOP OF BEAM.

FOR GENERAL NOTES SEE SHT. 2.

FOR REINFORCING DETAILS SEE SCHEDULE, SHEETS 26 & 27.

WORK THIS DRWG. WITH SHEETS 18, 17, 16 & 19.

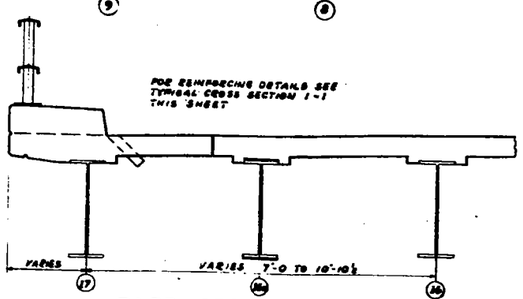

PART CROSS SECTION

EAST BOUND ROADWAY

SCALE: ½" = 1'-0

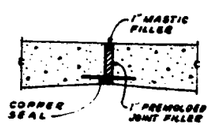

SECTION B-B

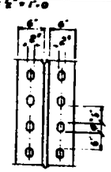

SEAL DETAIL

QUANTITIES FOR TWO DECKS				
ITEM	UNIT	TOTAL E.B. RDWY.	TOTAL W.B. RDWY.	TOTAL
CLASS "A" CONCRETE	CU. YDS.	305.6	306.7	612.1
REINFORCEMENT BARS	LBS.	66170	68002	134172
STRUCTURAL STEEL	LBS.			888916

ILLINOIS DIVISION OF HIGHWAYS
ROCKFORD BYPASS

F. A. ROUTE 194

PROJECT _____ SECTION 5HB

WINNEBAGO COUNTY

DECK CROSS SECTIONS

Designed By: E.S. Drawn By: [illegible] Checked By: [illegible]

Revised 12-10-57: Curbs raised. Class "A" Concrete. R.D.

12-16-59 Removed note for Rad. Concrete. W.E.P.

ROUTE NO.	SEC.	COUNTY	TOTAL SHEETS	SHEET NO.
FA 194	SHB	WINNEBAGO	34	21
STA.		TO STA.		
F.A.S. ROAD DIST. NO. 7 ILLINOIS			PROJ.	

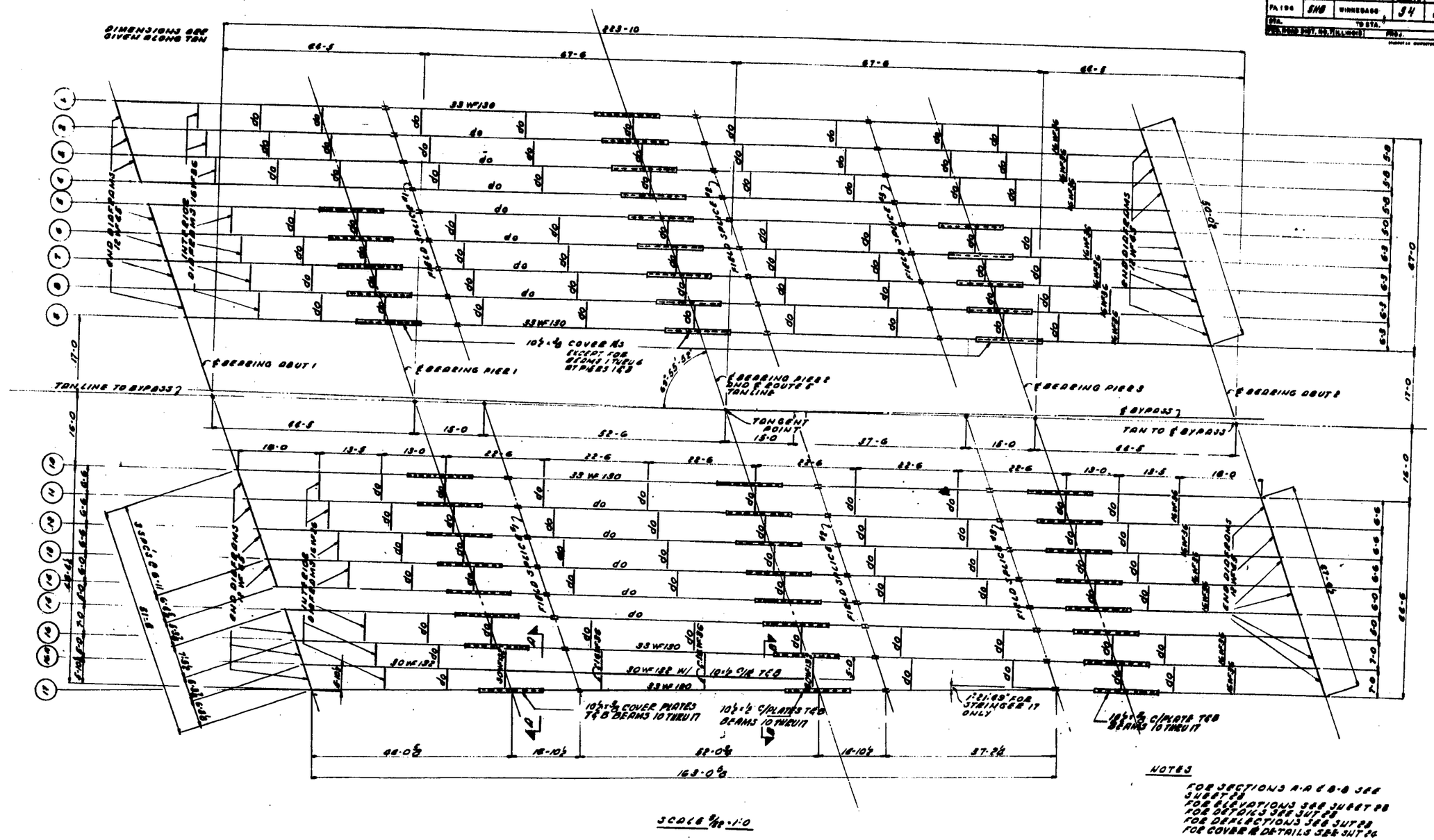

NOTES

FOR SECTIONS A-A & B-B SEE SHEET 28
FOR ELEVATIONS SEE SHEET 28
FOR DETAILS SEE SHT 28
FOR DEFLECTIONS SEE SHT 28
FOR COVER PL DETAILS SEE SHT 26

ILLINOIS DIVISION OF HIGHWAYS
ROCKFORD BYPASS

F. A. ROUTE 194

PROJECT _____ SECTION SHB

WINNEBAGO COUNTY

STEEL FRAMING PLAN

Designed By: E.S. Drawn By: E.S. Checked By:

ROUTE NO.	SEC.	COUNTY	SHEET NO.	TOTAL SHEETS
FA194	5HB	WINNEBAGO	34	25
STA.		TO STA.		
ILLINOIS DIV. OF HIGHWAYS			PROJ.	

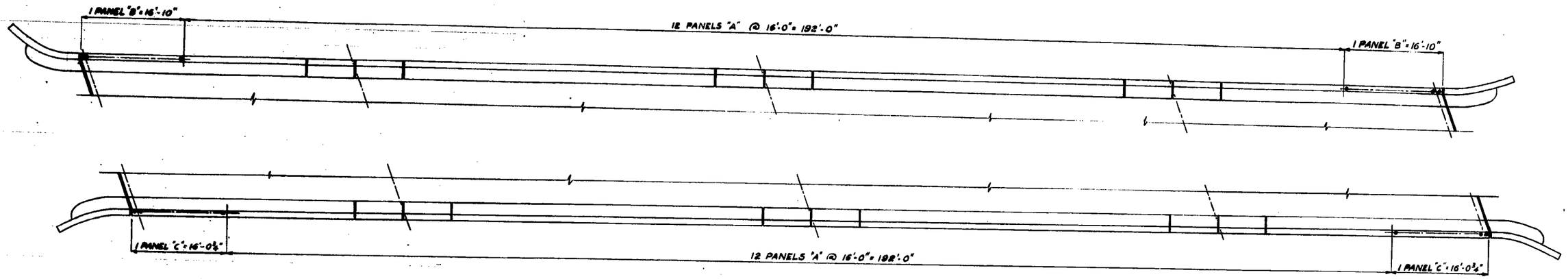

HANDRAIL PLAN-EASTBOUND STRUCTURE

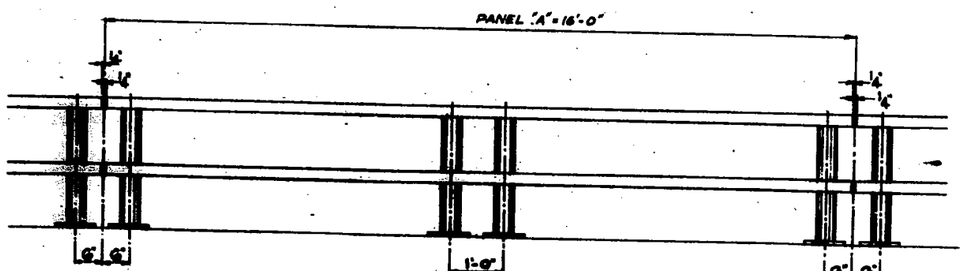

ELEVATION - TYR PANEL

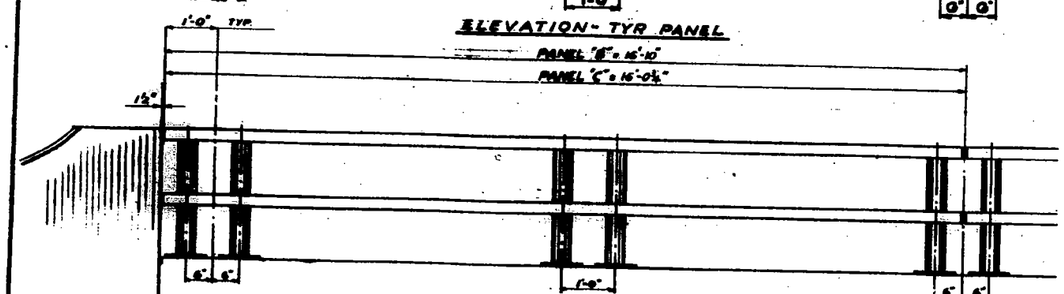

ELEVATION - TYR END PANEL

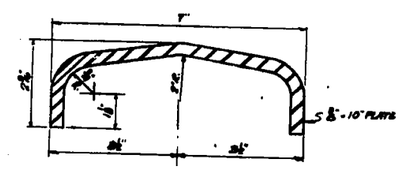

DETAIL OF RAIL

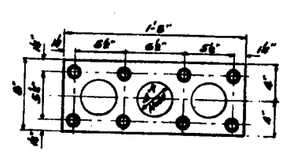

ANCHOR DEVICE
AT DOUBLE POSTS

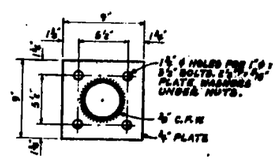

BASE PLATE
ALL POSTS - SUPERSTRUCTURE

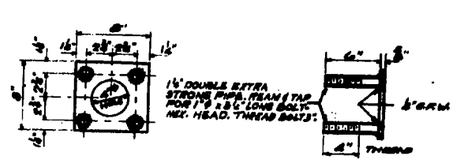

ANCHOR DEVICE
AT SINGLE POST

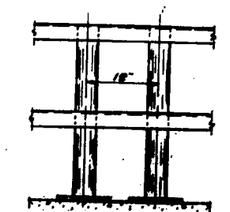

TYPICAL DOUBLE POST
See Std. PCA 8c Continuity Device

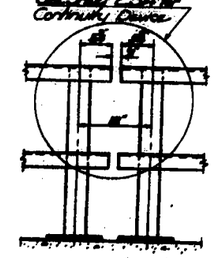

POSTS AT PANEL END

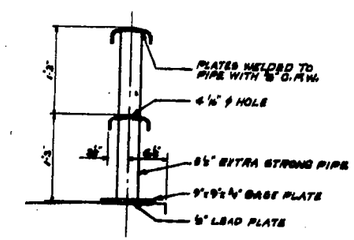

TYPICAL CROSS SECTION

NOTE:
PROVIDE 1-⅛" ϕ 1-½" SHIM FOR 50% OF RAIL POSTS. PUNCH SAME AS BASE PL's.

BILL OF MATERIAL

METAL HANDRAIL	LIN. FT.	445'-9½"

ILLINOIS DIVISION OF HIGHWAYS
ROCKFORD BYPASS

F. A. ROUTE 194
PROJECT 284 SECTION 5HB
WINNEBAGO COUNTY

HANDRAIL DETAILS
E.B. RDWY.

Designed By: Drawn By: Checked By: RFG

ROUTE NO.	SEC.	COUNTY	TOTAL SHEETS	SHEET NO.
FA 194	5HB	WINNEBAGO	34	26

STA. TO STA.

ROAD DIST. NO. 7 (ILLINOIS)

FED. AID PROJ.

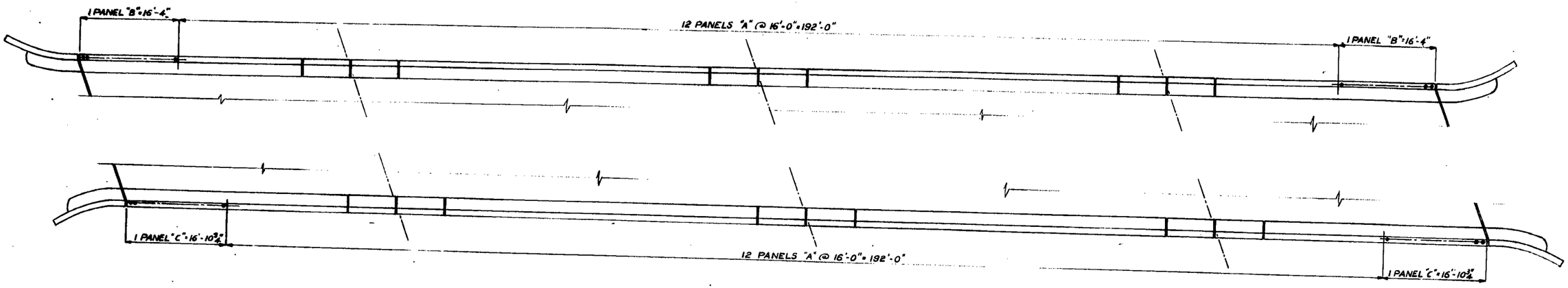

HANDRAIL PLAN-WESTBOUND STRUCTURE

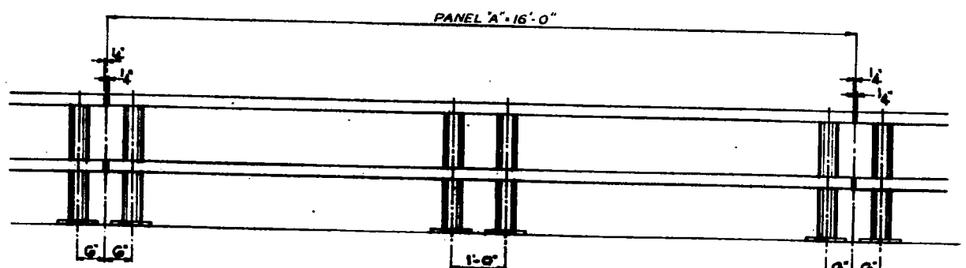

ELEVATION - TYP. PANEL

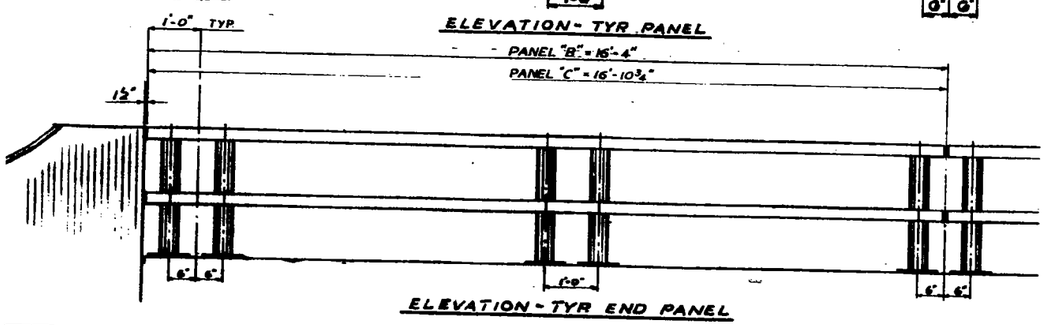

ELEVATION - TYP. END PANEL

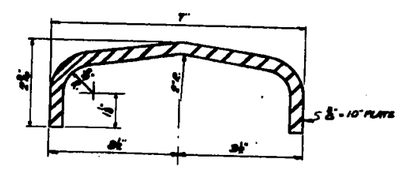

DETAIL OF RAIL

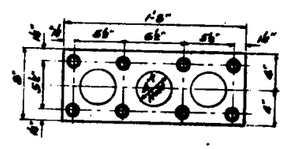

ANCHOR DEVICE
AT DOUBLE POSTS

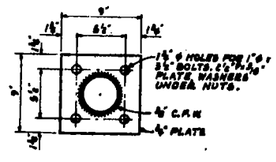

BASE PLATE
ALL POSTS - SUPERSTRUCTURE

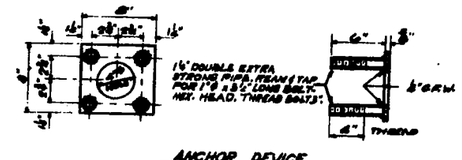

ANCHOR DEVICE
AT SINGLE POST

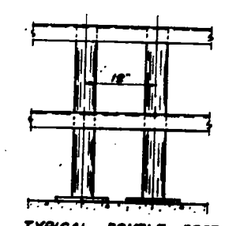

TYPICAL DOUBLE POST
See Sh. 25A for
CONTINUITY DEVICE

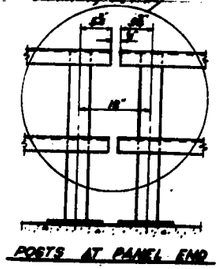

POSTS AT PANEL END

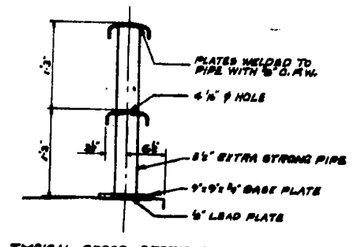

TYPICAL CROSS SECTION

NOTE:
PROVIDE 1-½" ϕ 1-½" SHIM FOR 50% OF RAIL POSTS. PUNCH SAME AS BASE PL.

BILL OF MATERIAL

METAL HANDRAIL	LIN. FT.	450 (±%)

ILLINOIS DIVISION OF HIGHWAYS
ROCKFORD BYPASS

F. A. ROUTE 194
PROJECT 284 SECTION 5HB
WINNEBAGO COUNTY

HANDRAIL DETAILS
W.B. RDWY

Designed By: Drawn By: Checked By: RAK

Bench Mark: Chisled " □" N.E. wingwall W.B. structure #101-0072 Elev. 800.23
Existing Structure: #101-0071 (E.B.) & #101-0072 (W.B.) are 228'1" Bk. to Bk. Abuts. with varying superstructure from 54'-2½"± to 49'-10½"± O. to O. of deck for the E.B. Structure and from 50'-6¼"± to 53'-9"± O. to O. deck for W.B. Structure. Built as F.A. Rte. 194 Section 5HB at Sta. 872+59.77 in 1963.
The traffic shall be maintained during the rehabilitation of the existing structures utilizing stage construction.

STATE OF ILLINOIS
DEPARTMENT OF TRANSPORTATION

ROUTE NO.	SECTION	COUNTY	TOTAL SHEETS	SHEET NO.
S. B. I. F. A. I. 39	5HBD	WINNEBAGO	171	107
FED. ROAD DIST. NO. 7		ILLINOIS	FED. AID PROJECT-	

SHEET NO. 1
52 SHEETS

Min. Horiz. cl. (℄ Rt. L's.)	W. Bound	E. Bound
A	13'-6"	12'-6"
B	8'-0"	8'-6"
C	9'-6"	9'-6"
D	10'-0"	12'-6"

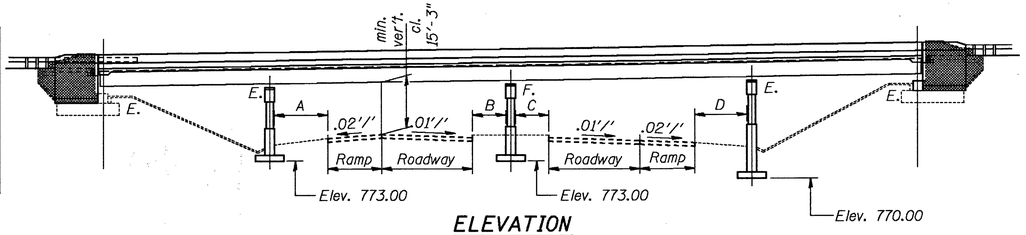

ELEVATION

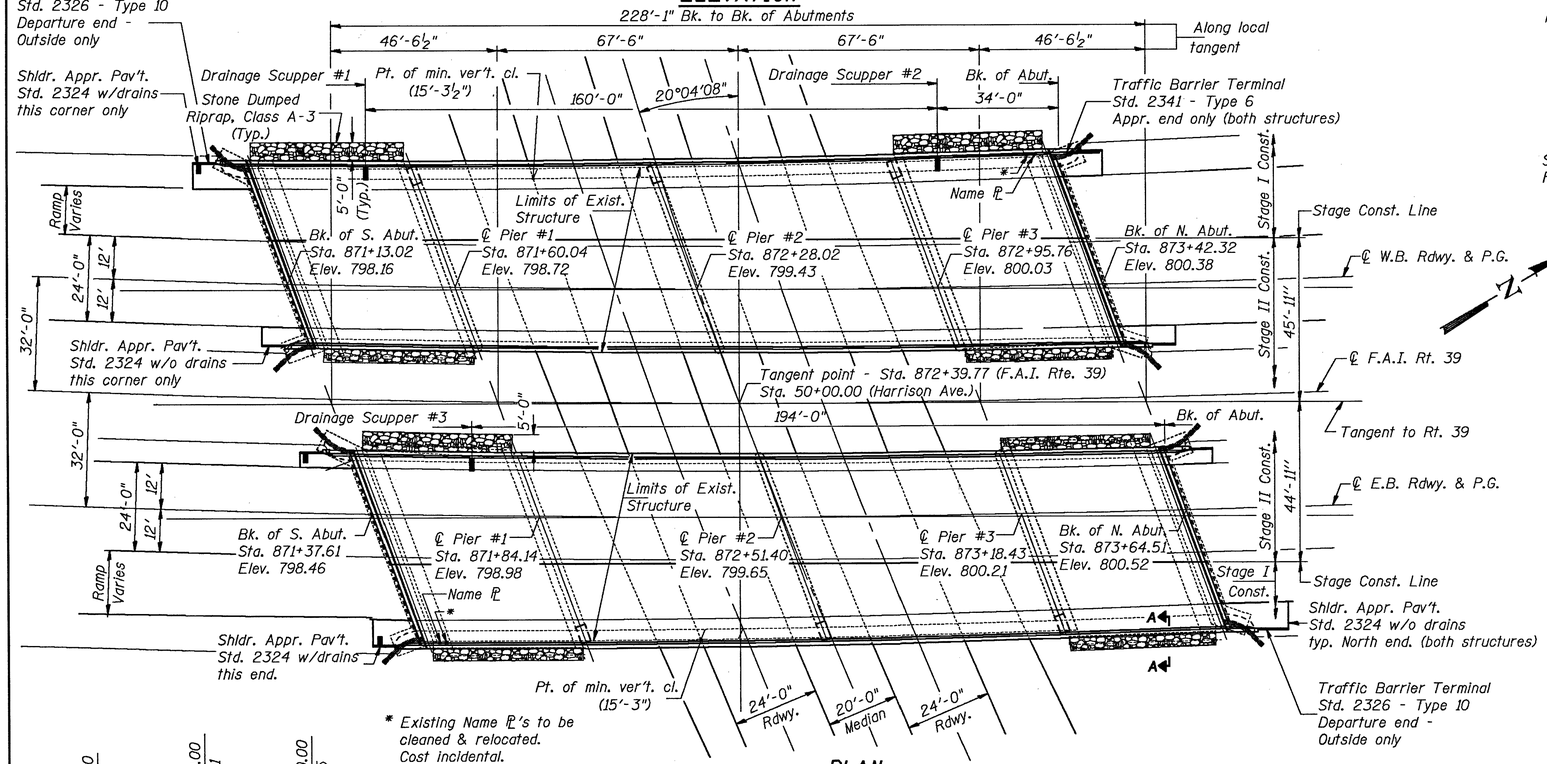

* Existing Name ℄'s to be cleaned & relocated. Cost incidental. See sheet #2 of 52 for details.

PLAN

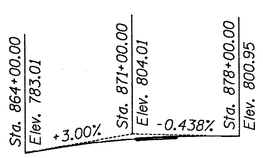

V.C. = 1400'

PROPOSED PROFILE GRADE

(℄ F.A.I. Rte. 39)

Proposed Elevations on structure are ±0.46' above existing profile grade.

CURVE DATA

HARRISON AVE.
Δ = 17°-53'-38"
D = 1°-00'-00"
T = 902.05'
L = 1789.41'
E = 70.57'
R = 5729.65'
S.E. =0.010 '/'

CURVE DATA

F.A.I. Rte. 39
ROCKFORD BYPASS
Δ = 17°-40'-00"
D = 0°-50'-00"
T = 1068.48'
L = 2120.00'
E = 82.53'
R = 6875.5'
S.E. =0.015 '/'

Super Elev. Attained from Sta. 859+85.61 to Sta. 862+10.61
Full Super Elev. Sta. 862+10.61 to Sta. 881+80.61

RIPRAP DIMENSION TABLE

	E.B.		W.B.	
	East	West	East	West
G	4'-9"	3'-9"	3'-9"	4'-9"
F	3"	1'-3"	1'-3"	3"

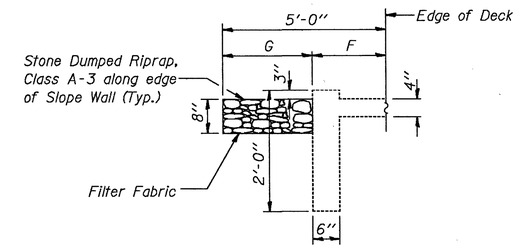

SECTION A-A

DESIGNED	Robert T. Boro
CHECKED	Sheila E. Moynihan
DRAWN	R. Doty
CHECKED	RTB SEM

May 17 1990
EXAMINED Jaj J. Kasper — ENGINEER OF BRIDGE DESIGN
PASSED Ralph E. Anderson — ENGINEER OF BRIDGES AND STRUCTURES
APPROVED — DIRECTOR OF HIGHWAYS

DESIGN SPECIFICATIONS

AASHTO (1983) and applicable Interims (1984 thru 1988)

LOADING HS 20-44 & ALT.

Allow 25 p.s.f. for Future Wearing Surface

DESIGN STRESSES

FIELD UNITS
f'_c = 3,500 psi
f_y = 60,000 psi (Reinf.)
f_y = 33,000 psi (A7 Existing) (Struct.)
f_y = 36,000 psi (A36 New) (Struct.)

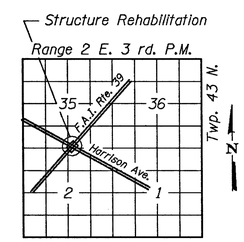

LOCATION SKETCH

GENERAL PLAN
F.A.I. RTE. 39 OVER
HARRISON AVE.
F.A.I. RTE. 39 SECTION 5HBD
STA. 872+39.77
WINNEBAGO COUNTY
STRUCTURE NUMBER 101-0071 (E.B.)
STRUCTURE NUMBER 101-0072 (W.B.)

STATE OF ILLINOIS
DEPARTMENT OF TRANSPORTATION

ROUTE NO.	SECTION	COUNTY	TOTAL SHEETS	SHEET NO.
S.B.I. F.A.I. 39	5HBD	WINNEBAGO	171	108
FED. ROAD DIST. NO. 7		ILLINOIS	FED. AID PROJECT-	

SHEET NO. 2
52 SHEETS

GENERAL NOTES

Fasteners shall be high strength bolts. Bolts $\frac{7}{8}$''ϕ, open holes $\frac{15}{16}$''ϕ, unless otherwise noted.

Calculated weight of new Structural Steel = 116930 Lbs.
Estimated weight of existing Structural Steel to be painted = 316 Tons.

All existing structural steel shall be cleaned by Method I.

The three coat lead and chromate free alkyd paint system shall be used for field painting of existing structural steel. The color of the final finish coat shall be Munsell Standard 7.5G 4/8 Interstate Green.

The three coat lead and chromate free alkyd paint system shall be used for shop and field painting of new structural steel. The color of the final finish coat shall be Munsell Standard 7.5G 4/8 Interstate Green.

All contact surface areas of new and existing structural steel shall be free of paint or lacquer.

Field welding of construction accessories will not be permitted to the bottom flange of beams nor to the top flange for a distance equal to one-fourth the span length each way from the pier supports. Field welding in other areas will be permitted only when approved by the Engineer.

Anchor bolts shall be set before bolting diaphragms over supports.

The main load carrying member components subject to tensile stress shall conform to the Supplemental Requirements for Notch Toughness Zone 2. These Components are the wide flange beams and all splice plate material of the wide flange beams.

Reinforcement bars shall conform to the requirements of AASHTO M-31, M-42 or M-53 Grade 60.

Plan dimensions and details relative to existing structure have been taken from existing plans and are subject to nominal construction variations. It shall be the Contractor's responsibility to verify such dimensions and details in the field and make necessary approved adjustments prior to construction or ordering of materials. Such variations shall not be cause for additional compensation for a change in the scope of the work, however, the Contractor will be paid for the quantity actually furnished at the unit price bid for the work.

Expansion bolts shall consist of approved expansion anchors, providing minimum certified proof load = 4,080 lbs., and $\frac{3}{4}$''ϕ x 12'' hooked bolts.

Bearing seat surfaces shall be constructed or adjusted to the designated elevations within a tolerance of $\frac{1}{8}$ inch. Adjustment shall be made either by grinding the surface or by shimming the bearing. Two $\frac{1}{8}$'' adjusting shims, of the dimensions of the bottom plate, shall be provided for each new and existing bearing in addition to all other plates or shims.

All top surfaces of the abutments shall receive "Bridge Seat Sealer." Estimated quantity = 555 Sq. Ft.

The Contractor will be required to mark on top of the concrete deck, the locations of the top flange of all the steel beams prior to any removal of the bridge concrete deck. Saw cutting directly over the top of the beam flanges is not permitted.

STATION 872+39.77
REBUILT 19 BY
STATE OF ILLINOIS
F.A.I. RT. 39 SEC. 5HBD
F.A. PROJECT:
LOADING HS20
STR. NO. 101-0071

NAME PLATE
East Bound Structure
(See Std. 2113)

STATION 872+39.77
REBUILT 19 BY
STATE OF ILLINOIS
F.A.I. RT. 39 SEC. 5HBD
F.A. PROJECT:
LOADING HS20
STR. NO. 101-0072

NAME PLATE
West Bound Structure
(See Std. 2113)

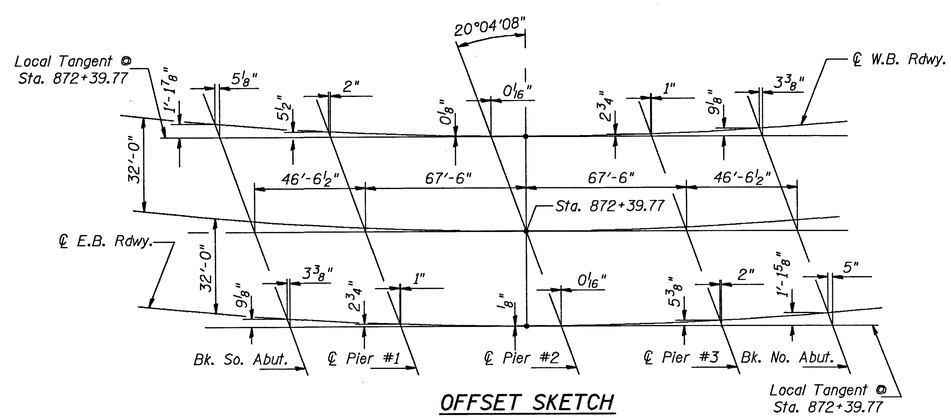

OFFSET SKETCH

TOTAL BILL OF MATERIAL

	ITEM	UNIT	SUPER	SUB	TOTAL
	Concrete Removal	Cu. Yd.		~~60~~ 51.1	~~60~~ 51.1
	Expansion Bolts $\frac{3}{4}$''ϕ	Each		~~536~~ 423	~~536~~ 423
	Removal of Existing Concrete Deck	Each		2	2
	Structure Excavation	Cu. Yd.		292	292
	Preformed Joint Seal 4''	Lin. Ft.	233		233
	Class X Concrete Superstructure	Cu. Yd.	~~714.0~~ 716		~~714.0~~ 716
*	Protective Coat	Sq. Yd.	408		408
	Elastomeric Bearing Assembly, Type II	Each	39		39
	Class X Concrete	Cu. Yd.		103.9	103.9
	Structural Steel	L.S.	1		1
	Stud Shear Connectors	Each	13875		13875
	Cleaning and Painting Steel Bridge	L.S.	1		1
	Reinforcement Bars, Epoxy Coated	Pound	~~184040~~	13270	~~197310~~ 193571
	Name Plates	Each	2		2
	Stone Dumped Riprap, Class A-3	Sq. Yd.		~~195~~ 222	~~195~~ 222
	Bridge Seat Sealer	L.S.		1	1
	Drainage Scuppers	Each	3		3
	Epoxy Crack Sealing	Lin. Ft.		~~184~~ 173	~~184~~ 173
**	Jacking Existing Structure	L.S.	1		1
	Repair Concrete Structures	Sq. Ft.		~~114~~ 89	~~114~~ 89
	Slope Wall Slurry Pumping, SPL	Cu. Yd.		~~17~~ 38	~~17~~ 38
	Anchor Bolt Extension	Each	102		102
	Remove and Reinstall Bearings	Each	51		51
	Filter Fabric For Use With Riprap	Sq. Yd.		~~195~~ 222	~~195~~ 222

* Quantity includes parapets only.
** Includes both strs 101-0071 & 101-0072

DESIGNED	RTBoro
CHECKED	Sheila E. Moynihan
DRAWN	R. Doty
CHECKED	RTB SEM

May 17 1990
EXAMINED Jaj J. Kaspar — ENGINEER OF BRIDGE DESIGN
PASSED Ralph E. Anderson — ENGINEER OF BRIDGES AND STRUCTURES
APPROVED — DIRECTOR OF HIGHWAYS

GENERAL DATA
F.A.I. RT. 39 SEC. 5HBD
WINNEBAGO COUNTY
STA. 872+39.77

ROUTE NO.	SECTION	COUNTY	TOTAL SHEETS	SHEET NO.
S. B. I. Fr. A. I. 39	5HBD	WINNEBAGO	171	109
FED. ROAD DIST. NO. 7		ILLINOIS	FED. AID PROJECT-	

SHEET NO. 3
52 SHEETS

STATE OF ILLINOIS
DEPARTMENT OF TRANSPORTATION

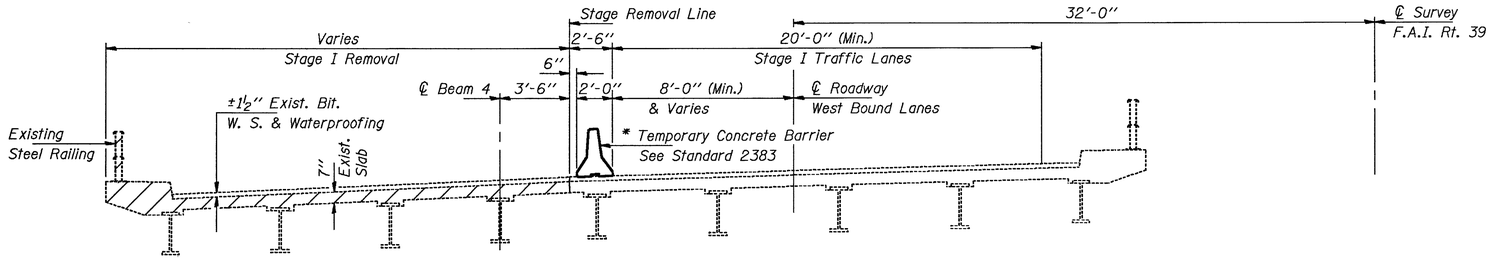

STAGE I REMOVAL

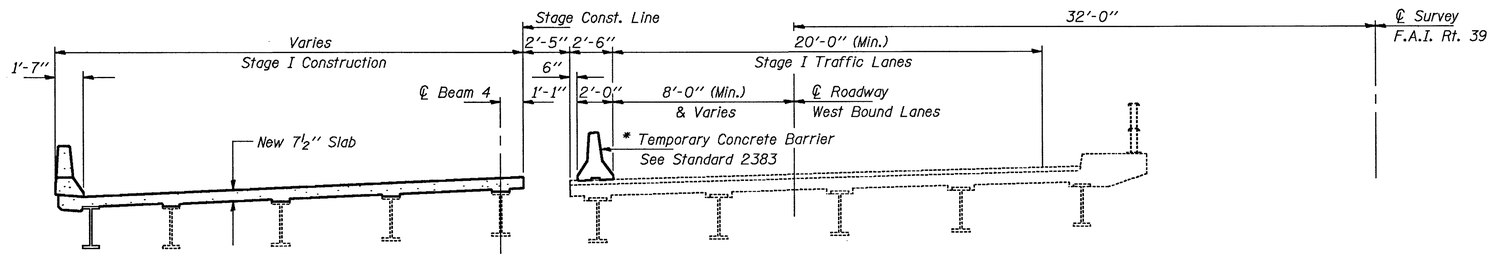

STAGE I CONSTRUCTION

Notes: All cross sections are Looking North.
For details of Temporary Concrete Barrier see sheet #5 of 52.
Hatched areas indicate "Removal of Existing Concrete Deck."
Removal of existing steel railing, bituminous wearing surface and waterproofing is incidental to "Removal of Existing Concrete Deck."

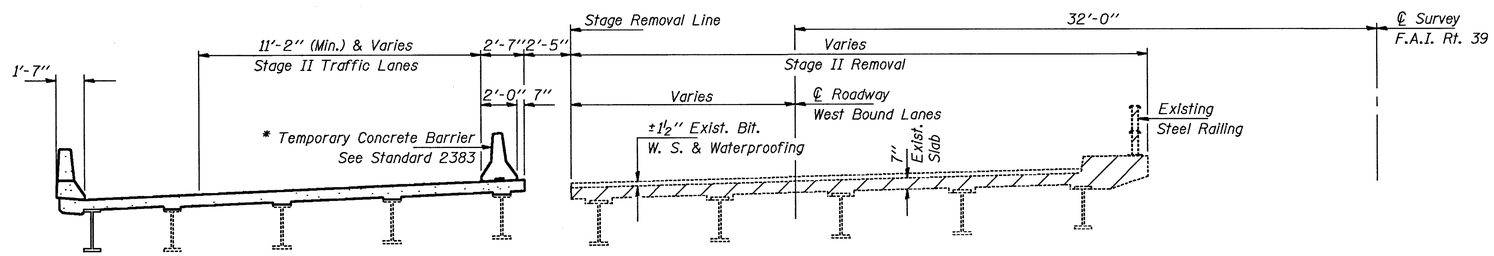

STAGE II REMOVAL

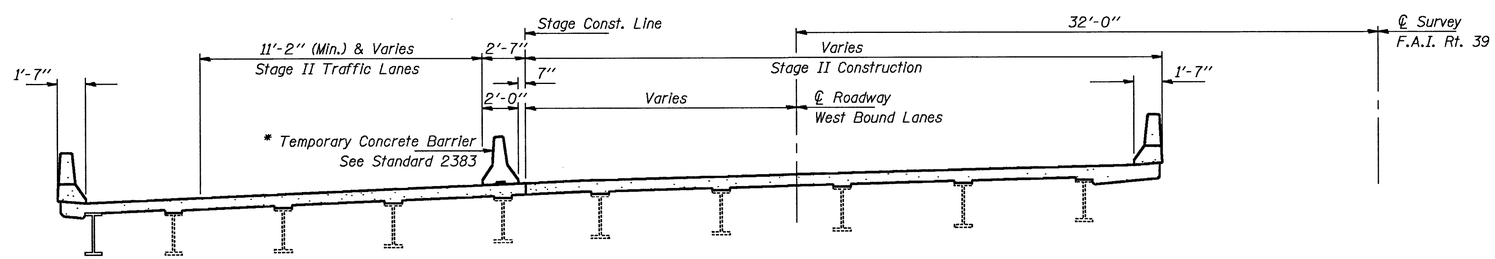

STAGE II CONSTRUCTION

DESIGNED	R T Boro
CHECKED	Sheila E Moynihan
DRAWN	R. Doty
CHECKED	RTB SEM

May 17 1990
EXAMINED Jozef J. Kaspar
ENGINEER OF BRIDGE DESIGN
PASSED Ralph E. Anderson
ENGINEER OF BRIDGES AND STRUCTURES
APPROVED
DIRECTOR OF HIGHWAYS

* Pay item for Temporary Concrete Barrier is included with the Roadway Plans.

STAGE CONSTRUCTION DETAILS
WEST BOUND LANES
F.A.I. RT. 39 SEC. 5HBD
WINNEBAGO COUNTY
STA. 872+39.77

ROUTE NO.	SECTION	COUNTY	TOTAL SHEETS	SHEET NO.
S. B. I. F. A. I. 39	5HBD	WINNEBAGO	171	110
FED. ROAD DIST. NO. 7		ILLINOIS	FED. AID PROJECT-	

SHEET NO. 4
52 SHEETS

STATE OF ILLINOIS
DEPARTMENT OF TRANSPORTATION

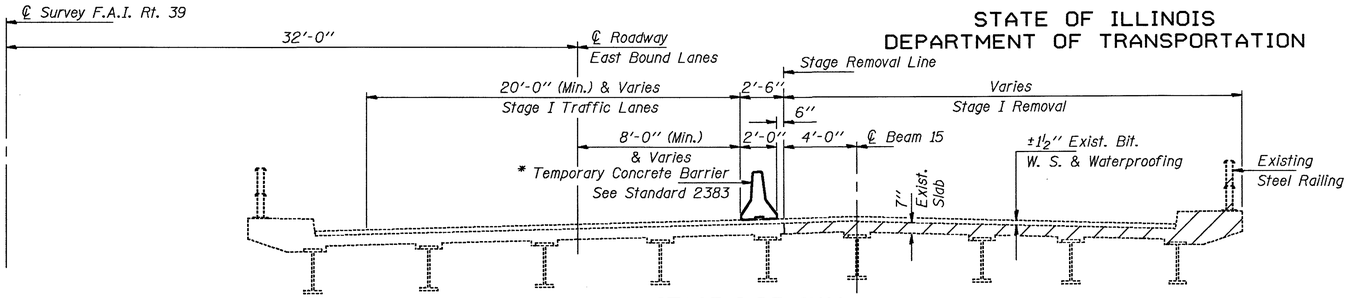

STAGE I REMOVAL

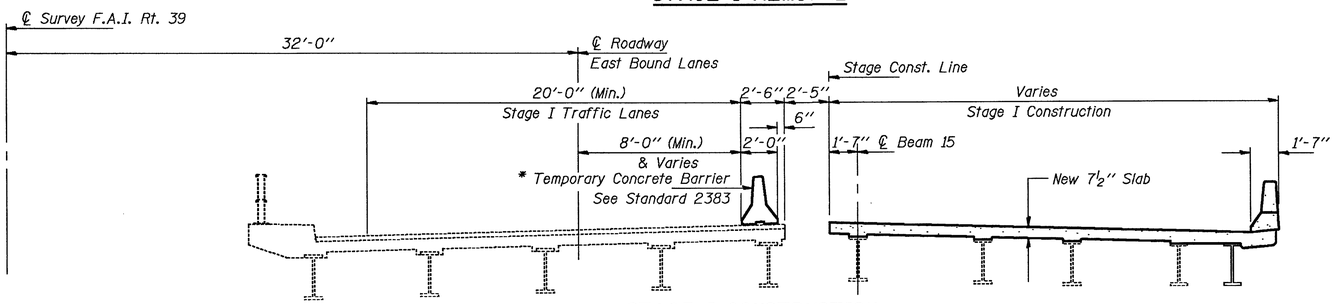

STAGE I CONSTRUCTION

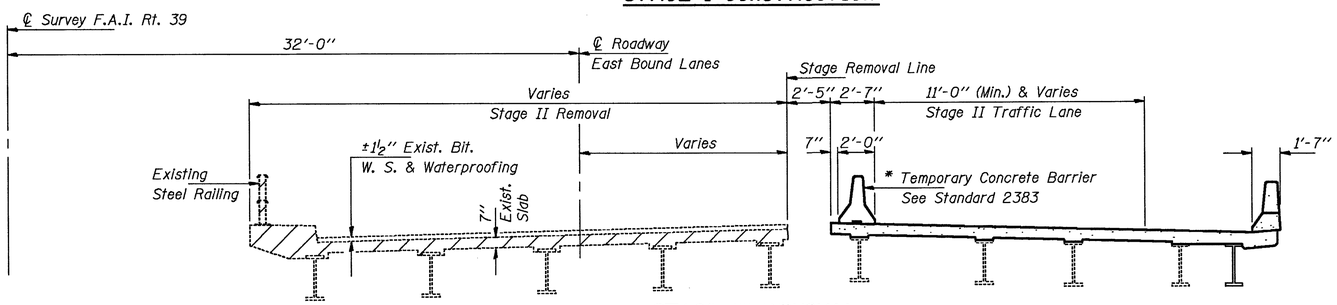

STAGE II REMOVAL

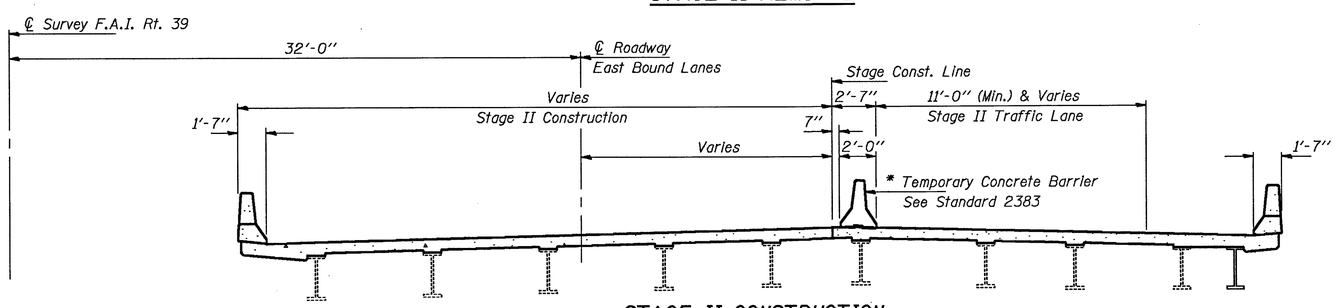

STAGE II CONSTRUCTION

Notes: All cross sections are Looking North.
For details of Temporary Concrete Barrier see sheet #5 of 52.
Hatched areas indicate "Removal of Existing Concrete Deck."
Removal of existing steel railing, bituminous wearing surface and waterproofing is incidental to "Removal of Existing Concrete Deck."

DESIGNED	R.T. Boro
CHECKED	Sheila E. Moynihan
DRAWN	R. Doty
CHECKED	RTB SEM

May 17 1990
EXAMINED Jaj D. Kaspar
ENGINEER OF BRIDGE DESIGN
PASSED Ralph E. Anderson
ENGINEER OF BRIDGES AND STRUCTURES
APPROVED
DIRECTOR OF HIGHWAYS

* Pay item for Temporary Concrete Barrier is included with the Roadway Plans.

STAGE CONSTRUCTION DETAILS
EAST BOUND LANES
F.A.I. RT. 39 SEC. 5HBD
WINNEBAGO COUNTY
STA. 872+39.77

STATE OF ILLINOIS
DEPARTMENT OF TRANSPORTATION

ROUTE NO.	SECTION	COUNTY	TOTAL SHEETS	SHEET NO.
S. B. I. F. A. I. 39	5HBD	WINNEBAGO	171	111
FED. ROAD DIST. NO. 7		ILLINOIS	FED. AID PROJECT-	

SHEET NO. 5
52 SHEETS

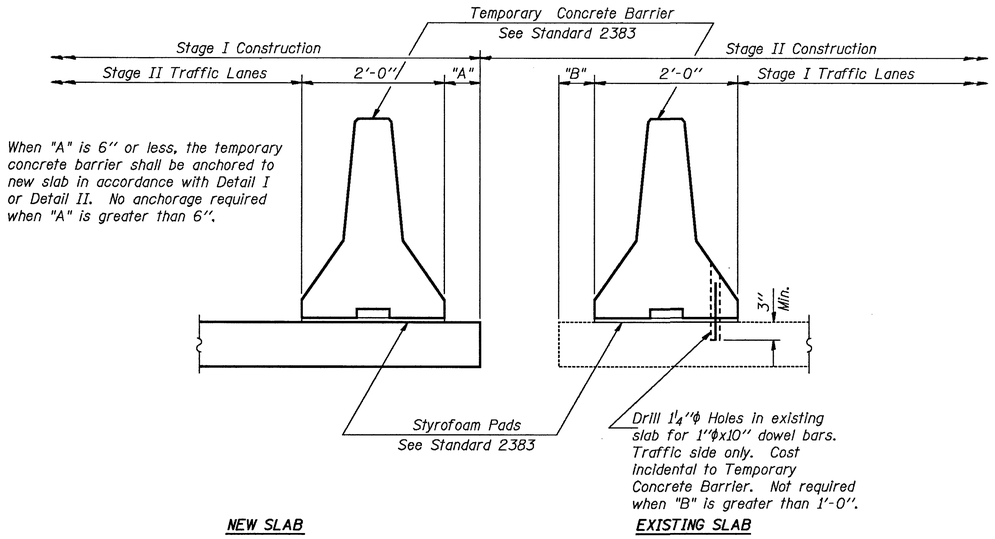

SECTIONS THRU SLAB

NOTES

Detail I - With Bar Splicer or Couplers:
Connect one (1) 1"x7"x10" steel ℙ to the top layer of couplers with 2-⅝"ϕ bolts screwed to coupler at approximate ℄ of each 10'-0" barrier panel.

Detail II - With Extended Reinforcement Bars:
Connect one (1) 1"x7"x10" steel ℙ to the concrete slab with 2-⅝"ϕ Expansion Anchors or cast in place inserts spaced between the top layer of reinforcement at approximate ℄ of each 10'-0" barrier panel.

Cost of anchorage is incidental to Temporary Concrete Barrier.

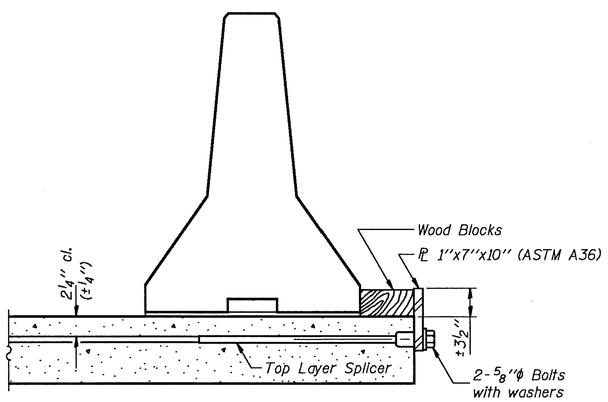

DETAIL I

The 1"x7"x10" Plate shall not be removed until Stage II Construction forms and reinforcement bars are in place.

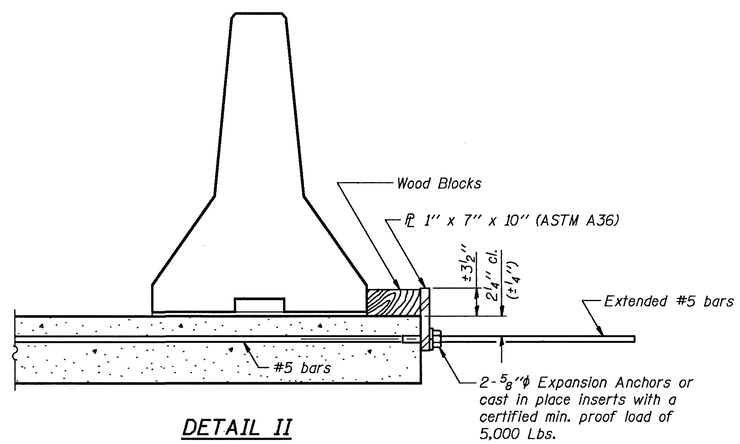

DETAIL II

The 1"x7"x10" Plate shall not be removed until Stage II Construction forms and all reinforcement bars are in place and the concrete is ready to be placed.

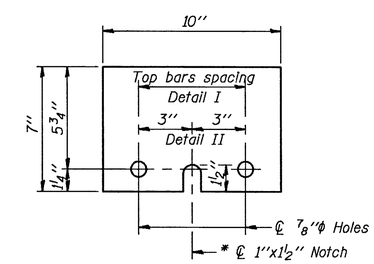

ℙ 1"x7"x10"

* Required only with Detail II

DESIGNED	RT Bozo
CHECKED	Charles E. Moynihan
DRAWN	R. Doty
CHECKED	RTB SEM

May 17 1990
EXAMINED Greg J. Kaspar — ENGINEER OF BRIDGE DESIGN
PASSED Ralph E. Anderson — ENGINEER OF BRIDGES AND STRUCTURES
APPROVED — DIRECTOR OF HIGHWAYS

R-27 6-1-89

TEMPORARY CONCRETE BARRIER
FOR STAGE CONSTRUCTION
F.A.I. RT. 39 SEC. 5HBD
WINNEBAGO COUNTY
STA. 872+39.77

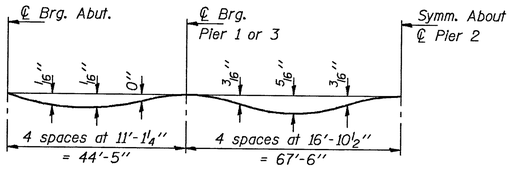

DEAD LOAD DEFLECTION DIAGRAM

(Includes weight of concrete only)

Note: The above deflections are not to be used in the field if the engineer is working from the grade elevations adjusted for dead load deflections as shown below and on sheets #7 & #8 of 52.

STATE OF ILLINOIS
DEPARTMENT OF TRANSPORTATION

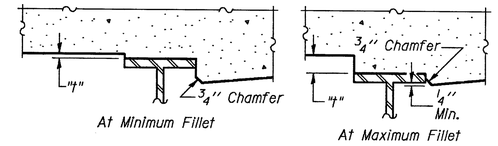

ROUTE NO.	SECTION	COUNTY	TOTAL SHEETS	SHEET NO.
S.B.I. F.A.I. 39	5HBD	WINNEBAGO	171	112
FED. ROAD DIST. NO. 7	ILLINOIS	FED. AID PROJECT-		

SHEET NO. 6
52 SHEETS

To determine "t": After all structural steel has been erected, elevations of the top flanges of the beams shall be taken at intervals shown on sheet #8 of 52. These elevations subtracted from the "Theoretical Grade Elevations Adjusted for Dead Load Deflection" shown below and on sheets #7 & #8 of 52, minus slab thickness, equals the fillet heights "t" above top flange of beams.

FILLET HEIGHTS

BEAM 1A

Location	Station	Offset	Theoretical Grade Elevations	Theoretical Grade Elevations Adjusted For Dead Load Deflection
Bk. S. Abut.	87100.297	-32.599	797.405	797.405
℄ Brg. S. Abut.	87102.442	-32.641	797.432	797.432
A	87112.513	-32.889	797.554	797.559
B	87122.585	-33.123	797.674	797.679
C	87132.659	-33.341	797.792	797.794
℄ Brg. Pier 1	87147.181	-33.631	797.958	797.958
D	87157.255	-33.813	798.070	798.079
E	87167.331	-33.982	798.180	798.198
F	87177.406	-34.135	798.289	798.312
G	87187.481	-34.274	798.395	798.415
H	87197.558	-34.399	798.498	798.511
I	87207.634	-34.509	798.600	798.605
℄ Brg. Pier 2	87215.192	-34.582	798.674	798.674
J	87225.269	-34.665	798.772	798.780
K	87235.347	-34.735	798.868	798.883
L	87245.423	-34.790	798.961	798.984
M	87255.501	-34.830	799.052	799.073
N	87265.579	-34.856	799.141	799.157
O	87275.657	-34.867	799.228	799.235
℄ Brg. Pier 3	87283.215	-34.866	799.291	799.291
P	87293.293	-34.851	799.373	799.374
Q	87303.371	-34.822	799.454	799.458
R	87313.448	-34.778	799.533	799.538
℄ Brg. N. Abut.	87327.976	-34.690	799.642	799.642
Bk. N. Abut.	87330.122	-34.662	799.658	799.658

BEAM 1

Location	Station	Offset	Theoretical Grade Elevations	Theoretical Grade Elevations Adjusted For Dead Load Deflection
Bk. S. Abut.	87101.075	-30.614	797.455	797.455
℄ Brg. S. Abut.	87103.219	-30.656	797.481	797.481
A	87113.309	-30.848	797.605	797.609
B	87123.400	-31.024	797.726	797.731
C	87133.491	-31.186	797.845	797.847
℄ Brg. Pier 1	87148.041	-31.394	798.013	798.013
D	87158.133	-31.520	798.126	798.136
E	87168.226	-31.631	798.238	798.255
F	87178.319	-31.728	798.347	798.370
G	87188.412	-31.810	798.454	798.474
H	87198.505	-31.877	798.559	798.572
I	87208.599	-31.930	798.661	798.667
℄ Brg. Pier 2	87216.169	-31.960	798.737	798.737
J	87226.263	-31.987	798.835	798.843
K	87236.357	-31.999	798.932	798.947
L	87246.451	-31.997	799.026	799.048
M	87256.545	-31.980	799.118	799.140
N	87266.639	-31.948	799.208	799.224
O	87276.733	-31.902	799.296	799.303
℄ Brg. Pier 3	87284.303	-31.857	799.360	799.360
P	87294.396	-31.785	799.444	799.445
Q	87304.490	-31.698	799.526	799.530
R	87314.583	-31.597	799.605	799.610
℄ Brg. N. Abut.	87329.133	-31.425	799.716	799.716
Bk. N. Abut.	87331.277	-31.397	799.731	799.731

WEST LONGITUDINAL BONDED CONST. JOINT

Location	Station	Offset	Theoretical Grade Elevations	Theoretical Grade Elevations Adjusted For Dead Load Deflection
Bk. S. Abut.	87101.496	-29.539	797.482	797.482
℄ Brg. S. Abut.	87103.640	-29.581	797.508	797.508
A	87113.729	-29.772	797.632	797.636
B	87123.818	-29.948	797.753	797.757
C	87133.908	-30.109	797.872	797.874
℄ Brg. Pier 1	87148.455	-30.316	798.039	798.039
D	87158.545	-30.441	798.153	798.162
E	87168.636	-30.552	798.264	798.281
F	87178.728	-30.648	798.373	798.396
G	87188.820	-30.730	798.480	798.500
H	87198.911	-30.796	798.585	798.598
I	87209.003	-30.848	798.687	798.693
℄ Brg. Pier 2	87216.573	-30.878	798.762	798.762
J	87226.665	-30.904	798.861	798.869
K	87236.757	-30.916	798.957	798.972
L	87246.850	-30.913	799.052	799.074
M	87256.942	-30.895	799.144	799.165
N	87267.034	-30.863	799.233	799.250
O	87277.126	-30.816	799.321	799.328
℄ Brg. Pier 3	87284.695	-30.771	799.385	799.385
P	87294.787	-30.699	799.469	799.470
Q	87304.879	-30.611	799.550	799.554
R	87314.970	-30.509	799.630	799.634
℄ Brg. N. Abut.	87329.518	-30.336	799.740	799.740
Bk. N. Abut.	87331.662	-30.308	799.756	799.756

BEAM 2

Location	Station	Offset	Theoretical Grade Elevations	Theoretical Grade Elevations Adjusted For Dead Load Deflection
Bk. S. Abut.	87103.277	-24.990	797.596	797.596
℄ Brg. S. Abut.	87105.420	-25.032	797.622	797.622
A	87115.502	-25.220	797.745	797.749
B	87125.584	-25.393	797.865	797.870
C	87135.667	-25.552	797.984	797.986
℄ Brg. Pier 1	87150.204	-25.755	798.151	798.151
D	87160.288	-25.878	798.264	798.273
E	87170.373	-25.986	798.374	798.392
F	87180.457	-26.080	798.483	798.506
G	87190.542	-26.159	798.590	798.610
H	87200.628	-26.223	798.694	798.707
I	87210.713	-26.273	798.796	798.801
℄ Brg. Pier 2	87218.277	-26.300	798.871	798.871
J	87228.362	-26.324	798.969	798.977
K	87238.448	-26.333	799.065	799.080
L	87248.534	-26.328	799.159	799.181
M	87258.619	-26.308	799.250	799.272
N	87268.705	-26.273	799.340	799.356
O	87278.790	-26.224	799.427	799.434
℄ Brg. Pier 3	87286.354	-26.177	799.491	799.491
P	87296.439	-26.102	799.574	799.575
Q	87306.524	-26.012	799.655	799.659
R	87316.608	-25.908	799.734	799.739
℄ Brg. N. Abut.	87331.146	-25.731	799.844	799.844
Bk. N. Abut.	87333.289	-25.703	799.860	799.860

Note: Work this sheet with sheets #7 & #8 of 52.

DESIGNED RTBoo
CHECKED Sheila E. Moynihan
DRAWN R. Doty
CHECKED RTB SEM

May 17 1990
EXAMINED Raj D. Kaspar
ENGINEER OF BRIDGE DESIGN
PASSED Ralph E. Anderson
ENGINEER OF BRIDGES AND STRUCTURES
APPROVED
DIRECTOR OF HIGHWAYS

E-S 1-6-82

TOP OF SLAB ELEVATIONS
WEST BOUND LANES
F.A.I. RT. 39 SEC. 5HBD
WINNEBAGO COUNTY
STA. 872+39.77

STATE OF ILLINOIS
DEPARTMENT OF TRANSPORTATION

ROUTE NO.	SECTION	COUNTY	TOTAL SHEETS	SHEET NO.
S. B. I. R. Rt. 39	5HBD	WINNEBAGO	171	113
FED. ROAD DIST. NO. 7		ILLINOIS	FED. AID PROJECT-	

SHEET NO. 7
52 SHEETS

BEAM 3

Location	Station	Offset	Theoretical Grade Elevations	Theoretical Grade Elevations Adjusted For Dead Load Deflection
Bk. S. Abut.	87105.476	-19.365	797.736	797.736
℄ Brg. S. Abut.	87107.617	-19.406	797.762	797.762
A	87117.690	-19.591	797.884	797.889
B	87127.765	-19.761	798.004	798.009
C	87137.839	-19.917	798.122	798.124
℄ Brg. Pier 1	87152.365	-20.115	798.288	798.288
D	87162.440	-20.235	798.401	798.410
E	87172.516	-20.340	798.511	798.529
F	87182.593	-20.431	798.619	798.642
G	87192.669	-20.507	798.725	798.745
H	87202.746	-20.568	798.829	798.842
I	87212.823	-20.614	798.930	798.936
℄ Brg. Pier 2	87220.381	-20.640	799.005	799.005
J	87230.458	-20.660	799.102	799.110
K	87240.535	-20.667	799.198	799.213
L	87250.613	-20.658	799.291	799.313
M	87260.690	-20.635	799.382	799.404
N	87270.767	-20.597	799.471	799.487
O	87280.844	-20.545	799.558	799.565
℄ Brg. Pier 3	87288.401	-20.496	799.621	799.621
P	87298.478	-20.418	799.704	799.705
Q	87308.554	-20.325	799.785	799.789
R	87318.630	-20.218	799.863	799.868
℄ Brg. N. Abut.	87333.156	-20.037	799.972	799.972
Bk. N. Abut.	87335.297	-20.008	799.988	799.988

BEAM 4

Location	Station	Offset	Theoretical Grade Elevations	Theoretical Grade Elevations Adjusted For Dead Load Deflection
Bk. S. Abut.	87107.671	-13.739	797.876	797.876
℄ Brg. S. Abut.	87109.810	-13.780	797.902	797.902
A	87119.876	-13.962	798.024	798.028
B	87129.942	-14.129	798.143	798.148
C	87140.008	-14.281	798.261	798.263
℄ Brg. Pier 1	87154.521	-14.475	798.426	798.426
D	87164.589	-14.592	798.538	798.547
E	87174.657	-14.694	798.648	798.665
F	87184.725	-14.781	798.755	798.778
G	87194.793	-14.854	798.860	798.881
H	87204.861	-14.912	798.964	798.977
I	87214.930	-14.955	799.064	799.070
℄ Brg. Pier 2	87222.482	-14.978	799.139	799.139
J	87232.550	-14.996	799.236	799.243
K	87242.619	-14.999	799.331	799.346
L	87252.688	-14.988	799.423	799.446
M	87262.757	-14.962	799.514	799.535
N	87272.825	-14.921	799.602	799.618
O	87282.894	-14.866	799.688	799.695
℄ Brg. Pier 3	87290.445	-14.815	799.751	799.751
P	87300.513	-14.733	799.834	799.835
Q	87310.581	-14.638	799.914	799.918
R	87320.649	-14.528	799.992	799.996
℄ Brg. N. Abut.	87335.162	-14.343	800.100	800.100
Bk. N. Abut.	87337.302	-14.313	800.116	800.116

BONDED STAGE CONSTRUCTION JOINT

Location	Station	Offset	Theoretical Grade Elevations	Theoretical Grade Elevations Adjusted For Dead Load Deflection
Bk. S. Abut.	87108.090	-12.664	797.903	797.903
℄ Brg. S. Abut.	87110.229	-12.704	797.929	797.929
A	87120.293	-12.885	798.051	798.055
B	87130.357	-13.052	798.170	798.175
C	87140.422	-13.204	798.287	798.289
℄ Brg. Pier 1	87154.933	-13.397	798.452	798.452
D	87164.999	-13.513	798.564	798.573
E	87175.065	-13.614	798.674	798.691
F	87185.132	-13.701	798.781	798.804
G	87195.198	-13.773	798.886	798.907
H	87205.265	-13.831	798.989	799.003
I	87215.332	-13.874	799.090	799.096
℄ Brg. Pier 2	87222.883	-13.896	799.164	799.164
J	87232.950	-13.913	799.261	799.269
K	87243.017	-13.916	799.356	799.371
L	87253.084	-13.904	799.449	799.471
M	87263.152	-13.877	799.539	799.561
N	87273.219	-13.836	799.627	799.643
O	87283.286	-13.780	799.713	799.720
℄ Brg. Pier 3	87290.836	-13.728	799.776	799.776
P	87300.902	-13.647	799.859	799.859
Q	87310.968	-13.551	799.939	799.943
R	87321.034	-13.440	800.016	800.021
℄ Brg. N. Abut.	87335.546	-13.254	800.125	800.125
Bk. N. Abut.	87337.685	-13.224	800.140	800.140

BEAM 5

Location	Station	Offset	Theoretical Grade Elevations	Theoretical Grade Elevations Adjusted For Dead Load Deflection
Bk. S. Abut.	87109.605	-8.775	797.984	797.984
℄ Brg. S. Abut.	87111.742	-8.815	798.010	798.010
A	87121.801	-8.994	798.132	798.136
B	87131.859	-9.158	798.252	798.257
C	87141.919	-9.308	798.369	798.371
℄ Brg. Pier 1	87156.421	-9.498	798.535	798.535
D	87166.481	-9.612	798.647	798.656
E	87176.542	-9.711	798.756	798.774
F	87186.603	-9.796	798.864	798.887
G	87196.664	-9.866	798.969	798.989
H	87206.725	-9.921	799.072	799.085
I	87216.786	-9.962	799.173	799.178
℄ Brg. Pier 2	87224.332	-9.983	799.247	799.247
J	87234.394	-9.998	799.343	799.351
K	87244.455	-9.998	799.438	799.453
L	87254.516	-9.984	799.530	799.552
M	87264.578	-9.956	799.620	799.641
N	87274.639	-9.912	799.707	799.724
O	87284.700	-9.854	799.793	799.800
℄ Brg. Pier 3	87292.246	-9.801	799.855	799.855
P	87302.307	-9.717	799.937	799.938
Q	87312.367	-9.619	800.016	800.020
R	87322.427	-9.506	800.093	800.097
℄ Brg. N. Abut.	87336.930	-9.318	800.200	800.200
Bk. N. Abut.	87339.068	-9.287	800.215	800.215

BEAM 6

Location	Station	Offset	Theoretical Grade Elevations	Theoretical Grade Elevations Adjusted For Dead Load Deflection
Bk. S. Abut.	87112.018	-2.569	798.107	798.107
℄ Brg. S. Abut.	87114.154	-2.608	798.133	798.133
A	87124.203	-2.784	798.255	798.259
B	87134.253	-2.944	798.374	798.378
C	87144.303	-3.091	798.491	798.493
℄ Brg. Pier 1	87158.792	-3.276	798.655	798.655
D	87168.843	-3.386	798.766	798.776
E	87178.895	-3.482	798.875	798.893
F	87188.946	-3.563	798.982	799.005
G	87198.998	-3.630	799.087	799.107
H	87209.050	-3.682	799.189	799.202
I	87219.102	-3.719	799.289	799.295
℄ Brg. Pier 2	87226.641	-3.738	799.363	799.363
J	87236.694	-3.749	799.459	799.466
K	87246.746	-3.746	799.553	799.568
L	87256.798	-3.729	799.644	799.666
M	87266.850	-3.697	799.734	799.755
N	87276.902	-3.650	799.821	799.837
O	87286.954	-3.589	799.905	799.912
℄ Brg. Pier 3	87294.493	-3.533	799.967	799.967
P	87304.545	-3.446	800.048	800.049
Q	87314.596	-3.345	800.127	800.131
R	87324.647	-3.229	800.203	800.208
℄ Brg. N. Abut.	87339.136	-3.036	800.309	800.309
Bk. N. Abut.	87341.272	-3.005	800.324	800.324

℄ ROADWAY AND PROFILE GRADE LINE

Location	Station	Offset	Theoretical Grade Elevations	Theoretical Grade Elevations Adjusted For Dead Load Deflection
Bk. S. Abut.	87113.016	0.000	798.158	798.158
℄ Brg. S. Abut.	87115.166	0.000	798.185	798.185
A	87125.212	0.000	798.309	798.313
B	87135.259	0.000	798.430	798.435
C	87145.306	0.000	798.549	798.551
℄ Brg. Pier 1	87160.039	0.000	798.718	798.718
D	87170.085	0.000	798.831	798.840
E	87180.132	0.000	798.941	798.959
F	87190.179	0.000	799.049	799.072
G	87200.226	0.000	799.154	799.174
H	87210.273	0.000	799.257	799.270
I	87220.319	0.000	799.357	799.363
℄ Brg. Pier 2	87228.021	0.000	799.432	799.432
J	87238.068	0.000	799.528	799.536
K	87248.115	0.000	799.621	799.637
L	87258.162	0.000	799.712	799.735
M	87268.208	0.000	799.801	799.822
N	87278.255	0.000	799.887	799.903
O	87288.302	0.000	799.970	799.977
℄ Brg. Pier 3	87295.758	0.000	800.031	800.031
P	87305.805	0.000	800.110	800.111
Q	87315.852	0.000	800.186	800.191
R	87325.898	0.000	800.261	800.265
℄ Brg. N. Abut.	87340.201	0.000	800.362	800.362
Bk. N. Abut.	87342.324	0.000	800.377	800.377

DESIGNED RTBozo
CHECKED Sheila E. Moynihan
DRAWN R. Doty
CHECKED RTB SEM

May 17 1990
EXAMINED Raj. D. Kaspar
ENGINEER OF BRIDGE DESIGN
PASSED Ralph E. Anderson
ENGINEER OF BRIDGES AND STRUCTURES
APPROVED
DIRECTOR OF HIGHWAYS

E-S 1-6-82

Note: Work this sheet with sheets #6 & #8 of 52.

TOP OF SLAB ELEVATIONS
WEST BOUND LANES
F.A.I. RT. 39 SEC. 5HBD
WINNEBAGO COUNTY
STA. 872+39.77

ROUTE NO.	SECTION	COUNTY	TOTAL SHEETS	SHEET NO.
S. B. I. R. No. 39	5HBD	WINNEBAGO	171	114
FED. ROAD DIST. NO. 7		ILLINOIS	FED. AID PROJECT-	

SHEET NO. 8
52 SHEETS

STATE OF ILLINOIS
DEPARTMENT OF TRANSPORTATION

BEAM 7

Location	Station	Offset	Theoretical Grade Elevations	Theoretical Grade Elevations Adjusted For Dead Load Deflection
Bk. S. Abut.	87114.427	3.638	798.230	798.230
℄ Brg. S. Abut.	87116.561	3.599	798.256	798.256
A	87126.601	3.427	798.377	798.381
B	87136.642	3.270	798.495	798.500
C	87146.683	3.127	798.612	798.614
℄ Brg. Pier 1	87161.159	2.947	798.775	798.775
D	87171.201	2.840	798.886	798.895
E	87181.243	2.748	798.994	799.012
F	87191.286	2.670	799.101	799.123
G	87201.328	2.607	799.205	799.225
H	87211.371	2.558	799.306	799.320
I	87221.414	2.524	799.406	799.411
℄ Brg. Pier 2	87228.947	2.508	799.479	799.479
J	87238.990	2.500	799.574	799.582
K	87249.033	2.506	799.667	799.683
L	87259.076	2.527	799.758	799.781
M	87269.119	2.562	799.847	799.869
N	87279.162	2.612	799.934	799.950
O	87289.204	2.677	800.018	800.025
℄ Brg. Pier 3	87296.736	2.735	800.079	800.079
P	87306.778	2.825	800.160	800.161
Q	87316.820	2.930	800.238	800.242
R	87326.862	3.049	800.313	800.318
℄ Brg. N. Abut.	87341.338	3.247	800.419	800.419
Bk. N. Abut.	87343.472	3.279	800.434	800.434

BEAM 8

Location	Station	Offset	Theoretical Grade Elevations	Theoretical Grade Elevations Adjusted For Dead Load Deflection
Bk. S. Abut.	87116.832	9.846	798.353	798.353
℄ Brg. S. Abut.	87118.964	9.808	798.379	798.379
A	87128.995	9.639	798.499	798.503
B	87139.026	9.486	798.617	798.622
C	87149.058	9.346	798.733	798.735
℄ Brg. Pier 1	87163.522	9.171	798.895	798.895
D	87173.554	9.068	799.005	799.015
E	87183.588	8.979	799.113	799.131
F	87193.621	8.904	799.219	799.241
G	87203.655	8.845	799.322	799.342
H	87213.688	8.799	799.423	799.436
I	87223.722	8.769	799.522	799.528
℄ Brg. Pier 2	87231.248	8.755	799.595	799.595
J	87241.281	8.750	799.689	799.697
K	87251.315	8.760	799.782	799.797
L	87261.349	8.784	799.872	799.895
M	87271.383	8.822	799.961	799.982
N	87281.417	8.876	800.046	800.063
O	87291.450	8.944	800.130	800.137
℄ Brg. Pier 3	87298.975	9.004	800.191	800.191
P	87309.008	9.097	800.271	800.272
Q	87319.041	9.205	800.348	800.352
R	87329.073	9.328	800.424	800.428
℄ Brg. N. Abut.	87343.536	9.530	800.528	800.528
Bk. N. Abut.	87345.668	9.563	800.543	800.543

EAST LONGITUDINAL BONDED CONST. JOINT

Location	Station	Offset	Theoretical Grade Elevations	Theoretical Grade Elevations Adjusted For Dead Load Deflection
Bk. S. Abut.	87118.081	13.074	798.417	798.417
℄ Brg. S. Abut.	87120.211	13.037	798.443	798.443
A	87130.238	12.870	798.563	798.567
B	87140.264	12.718	798.680	798.685
C	87150.292	12.581	798.795	798.798
℄ Brg. Pier 1	87164.748	12.408	798.958	798.958
D	87174.777	12.306	799.067	799.077
E	87184.805	12.219	799.175	799.192
F	87194.834	12.146	799.280	799.303
G	87204.862	12.088	799.383	799.403
H	87214.891	12.045	799.484	799.497
I	87224.921	12.016	799.582	799.588
℄ Brg. Pier 2	87232.442	12.004	799.655	799.655
J	87242.472	12.001	799.749	799.757
K	87252.501	12.012	799.842	799.857
L	87262.530	12.038	799.932	799.954
M	87272.559	12.078	800.020	800.041
N	87282.588	12.133	800.105	800.121
O	87292.616	12.203	800.188	800.195
℄ Brg. Pier 3	87300.138	12.264	800.249	800.249
P	87310.166	12.359	800.329	800.330
Q	87320.194	12.469	800.406	800.410
R	87330.222	12.593	800.481	800.485
℄ Brg. N. Abut.	87344.677	12.798	800.585	800.585
Bk. N. Abut.	87346.808	12.831	800.600	800.600

BEAM 9

Location	Station	Offset	Theoretical Grade Elevations	Theoretical Grade Elevations Adjusted For Dead Load Deflection
Bk. S. Abut.	87119.232	16.054	798.476	798.476
℄ Brg. S. Abut.	87121.362	16.017	798.502	798.502
A	87131.384	15.852	798.621	798.625
B	87141.406	15.702	798.738	798.743
C	87151.429	15.566	798.853	798.855
℄ Brg. Pier 1	87165.880	15.396	799.015	799.015
D	87175.904	15.296	799.125	799.134
E	87185.928	15.210	799.232	799.249
F	87195.952	15.139	799.337	799.359
G	87205.976	15.083	799.439	799.460
H	87216.001	15.041	799.540	799.553
I	87226.026	15.014	799.638	799.644
℄ Brg. Pier 2	87233.544	15.003	799.710	799.710
J	87243.569	15.001	799.805	799.812
K	87253.594	15.014	799.897	799.912
L	87263.619	15.041	799.986	800.008
M	87273.643	15.083	800.074	800.095
N	87283.668	15.140	800.159	800.175
O	87293.692	15.211	800.242	800.249
℄ Brg. Pier 3	87301.210	15.274	800.303	800.303
P	87311.234	15.370	800.382	800.383
Q	87321.257	15.482	800.459	800.463
R	87331.281	15.608	800.534	800.538
℄ Brg. N. Abut.	87345.730	15.815	800.637	800.637
Bk. N. Abut.	87347.860	15.848	800.652	800.652

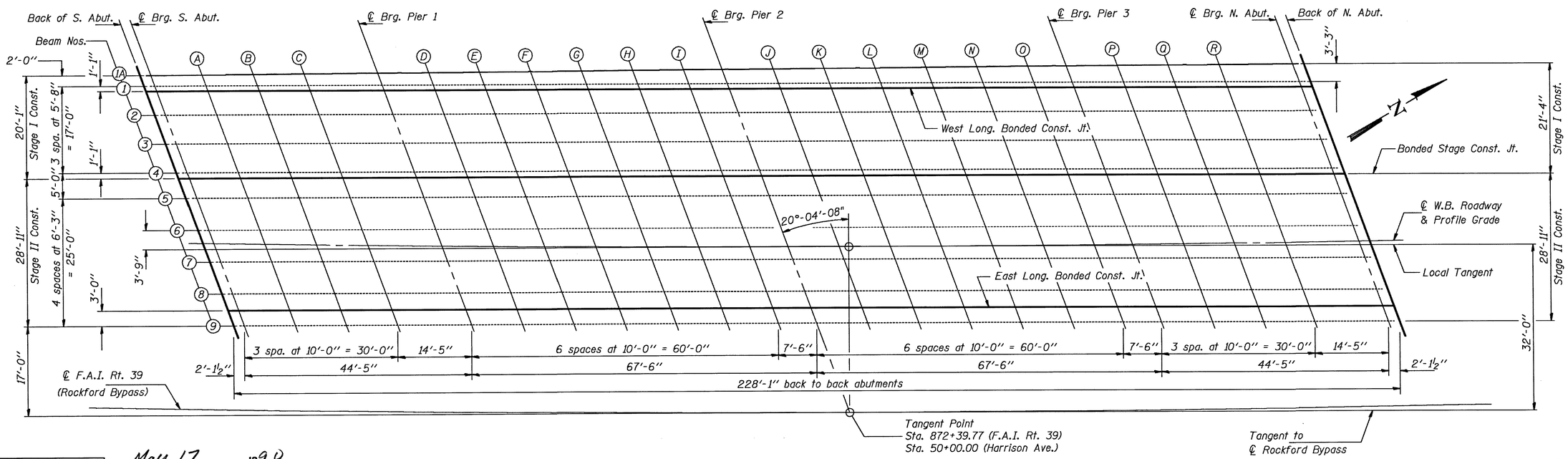

ELEVATIONS LOCATION PLAN

Note: Elevations along beam 1A are at 9'-11¾" cts. from S. Abut. to N. Abut.

Note: Work this sheet with sheets #6 & #7 of 52.

DESIGNED	R T Boro
CHECKED	Sheila E. Moynihan
DRAWN	R. Doty
CHECKED	RTB SEM

May 17 1990

EXAMINED Jaj D Kaspar — ENGINEER OF BRIDGE DESIGN

PASSED Ralph E. Anderson — ENGINEER OF BRIDGES AND STRUCTURES

APPROVED — DIRECTOR OF HIGHWAYS

E-S 1-6-82

TOP OF SLAB ELEVATIONS
WEST BOUND LANES
F.A.I. RT. 39 SEC. 5HBD
WINNEBAGO COUNTY
STA. 872+39.77

STATE OF ILLINOIS
DEPARTMENT OF TRANSPORTATION

ROUTE NO.	SECTION	COUNTY	TOTAL SHEETS	SHEET NO.
U. S. I. F. A. I. 39	5HBD	WINNEBAGO	171	115
FED. ROAD DIST. NO. 7	ILLINOIS	FED. AID PROJECT-		

SHEET NO. 9
52 SHEETS

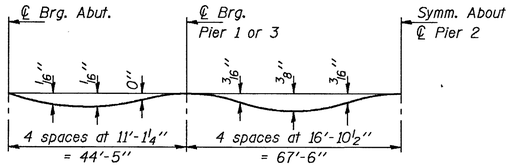

DEAD LOAD DEFLECTION DIAGRAM

(For all beams except as shown)
(Includes weight of concrete only)

Note: The above deflections are not to be used in the field if the engineer is working from the grade elevations adjusted for dead load deflections as shown below and on sheet #10 & #11 of 52.

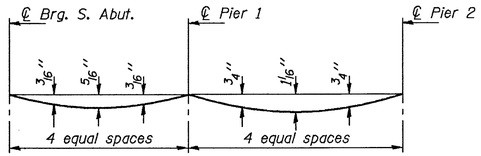

DEAD LOAD DEFLECTION DIAGRAM

(Beam 16A)

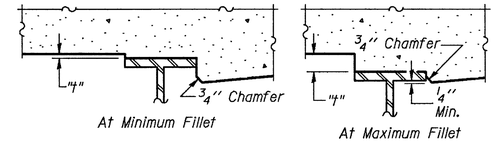

To determine "t": After all structural steel has been erected, elevations of the top flanges of the beams shall be taken at intervals shown on sheet #11 of 52. These elevations subtracted from the "Theoretical Grade Elevations Adjusted for Dead Load Deflection" shown below and on sheet #10 & #11 of 52, minus slab thickness, equals the fillet heights "t" above top flange of beams.

FILLET HEIGHTS

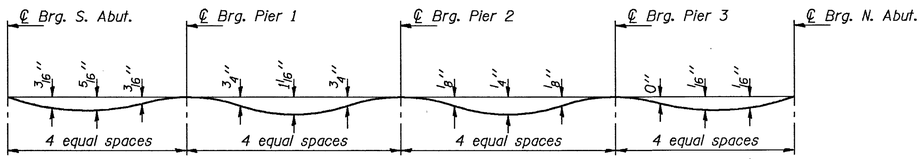

DEAD LOAD DEFLECTION DIAGRAM

(East Longitudinal Bonded Construction Joint)

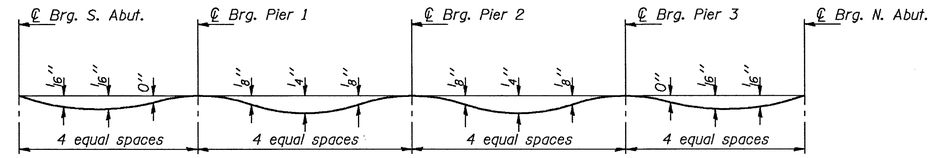

DEAD LOAD DEFLECTION DIAGRAM

(Beams 17 and 17A)

BEAM 10

Location	Station	Offset	Theoretical Grade Elevations	Theoretical Grade Elevations Adjusted For Dead Load Deflection
Bk. S. Abut.	87131.833	-15.151	798.162	798.162
℄ Brg. S. Abut.	87133.952	-15.184	798.187	798.187
A	87143.927	-15.330	798.303	798.308
B	87153.902	-15.463	798.416	798.422
C	87163.877	-15.580	798.528	798.530
℄ Brg. Pier 1	87178.259	-15.724	798.685	798.685
D	87188.235	-15.806	798.791	798.802
E	87198.212	-15.874	798.895	798.915
F	87208.188	-15.927	798.997	799.023
G	87218.165	-15.966	799.096	799.119
H	87228.141	-15.990	799.194	799.208
I	87238.118	-16.000	799.289	799.295
℄ Brg. Pier 2	87245.601	-15.998	799.358	799.358
J	87255.578	-15.982	799.450	799.458
K	87265.554	-15.952	799.538	799.556
L	87275.531	-15.907	799.625	799.651
M	87285.507	-15.848	799.710	799.734
N	87295.484	-15.774	799.792	799.810
O	87305.460	-15.685	799.872	799.880
℄ Brg. Pier 3	87312.941	-15.610	799.930	799.930
P	87322.917	-15.496	800.006	800.007
Q	87332.892	-15.368	800.080	800.085
R	87342.867	-15.225	800.152	800.157
℄ Brg. N. Abut.	87357.246	-14.994	800.251	800.251
Bk. N. Abut.	87359.366	-14.957	800.266	800.266

WEST LONGITUDINAL BONDED CONST. JOINT

Location	Station	Offset	Theoretical Grade Elevations	Theoretical Grade Elevations Adjusted For Dead Load Deflection
Bk. S. Abut.	87132.972	-12.168	798.220	798.220
℄ Brg. S. Abut.	87135.091	-12.201	798.245	798.245
A	87145.061	-12.346	798.361	798.366
B	87155.032	-12.476	798.474	798.479
C	87165.003	-12.592	798.585	798.588
℄ Brg. Pier 1	87179.379	-12.734	798.742	798.742
D	87189.351	-12.815	798.848	798.858
E	87199.323	-12.881	798.951	798.971
F	87209.295	-12.932	799.053	799.079
G	87219.267	-12.969	799.152	799.175
H	87229.239	-12.992	799.249	799.264
I	87239.212	-13.000	799.344	799.350
℄ Brg. Pier 2	87246.691	-12.997	799.413	799.413
J	87256.664	-12.979	799.504	799.513
K	87266.636	-12.947	799.593	799.610
L	87276.608	-12.901	799.679	799.705
M	87286.580	-12.840	799.764	799.788
N	87296.552	-12.765	799.846	799.864
O	87306.524	-12.675	799.925	799.933
℄ Brg. Pier 3	87314.002	-12.598	799.984	799.984
P	87323.973	-12.483	800.059	800.060
Q	87333.944	-12.353	800.133	800.137
R	87343.915	-12.209	800.204	800.210
℄ Brg. N. Abut.	87358.288	-11.976	800.303	800.303
Bk. N. Abut.	87360.406	-11.939	800.318	800.318

BEAM 11

Location	Station	Offset	Theoretical Grade Elevations	Theoretical Grade Elevations Adjusted For Dead Load Deflection
Bk. S. Abut.	87134.301	-8.688	798.288	798.288
℄ Brg. S. Abut.	87136.418	-8.721	798.313	798.313
A	87146.384	-8.864	798.428	798.433
B	87156.349	-8.992	798.541	798.547
C	87166.316	-9.106	798.652	798.655
℄ Brg. Pier 1	87180.684	-9.245	798.808	798.808
D	87190.651	-9.324	798.914	798.925
E	87200.618	-9.388	799.017	799.037
F	87210.585	-9.438	799.118	799.144
G	87220.552	-9.473	799.217	799.240
H	87230.519	-9.494	799.314	799.329
I	87240.487	-9.500	799.408	799.415
℄ Brg. Pier 2	87247.962	-9.495	799.478	799.478
J	87257.930	-9.476	799.568	799.577
K	87267.897	-9.442	799.656	799.674
L	87277.864	-9.394	799.743	799.768
M	87287.831	-9.331	799.826	799.851
N	87297.798	-9.254	799.908	799.926
O	87307.764	-9.163	799.988	799.996
℄ Brg. Pier 3	87315.239	-9.084	800.046	800.046
P	87325.205	-8.967	800.121	800.122
Q	87335.171	-8.836	800.194	800.199
R	87345.136	-8.690	800.266	800.271
℄ Brg. N. Abut.	87359.502	-8.454	800.364	800.364
Bk. N. Abut.	87361.619	-8.417	800.378	800.378

BEAM 12

Location	Station	Offset	Theoretical Grade Elevations	Theoretical Grade Elevations Adjusted For Dead Load Deflection
Bk. S. Abut.	87136.764	-2.225	798.414	798.414
℄ Brg. S. Abut.	87138.880	-2.257	798.439	798.439
A	87148.836	-2.396	798.554	798.559
B	87158.792	-2.521	798.666	798.672
C	87168.749	-2.632	798.777	798.779
℄ Brg. Pier 1	87183.104	-2.765	798.932	798.932
D	87193.061	-2.841	799.037	799.047
E	87203.019	-2.901	799.139	799.159
F	87212.977	-2.948	799.240	799.266
G	87222.935	-2.979	799.338	799.361
H	87232.893	-2.997	799.434	799.449
I	87242.851	-2.999	799.528	799.534
℄ Brg. Pier 2	87250.319	-2.992	799.597	799.597
J	87260.277	-2.969	799.687	799.695
K	87270.235	-2.932	799.774	799.792
L	87280.193	-2.881	799.860	799.885
M	87290.150	-2.815	799.943	799.968
N	87300.108	-2.734	800.024	800.043
O	87310.065	-2.639	800.103	800.111
℄ Brg. Pier 3	87317.532	-2.558	800.161	800.161
P	87327.489	-2.438	800.236	800.237
Q	87337.445	-2.303	800.308	800.313
R	87347.401	-2.154	800.379	800.384
℄ Brg. N. Abut.	87361.753	-1.913	800.477	800.477
Bk. N. Abut.	87363.868	-1.875	800.491	800.491

DESIGNED RTBozo
CHECKED Sheila E. Moynihan
DRAWN R. Doty
CHECKED RTB SEM

May 17 1990
EXAMINED Greg J. Kaspar
ENGINEER OF BRIDGE DESIGN
PASSED Ralph E. Anderson
ENGINEER OF BRIDGES AND STRUCTURES
APPROVED
DIRECTOR OF HIGHWAYS

E-S 1-6-82

Note: Work this sheet with sheets #10 & #11 of 52.

TOP OF SLAB ELEVATIONS
EAST BOUND LANES
F.A.I. RT. 39 SEC. 5HBD
WINNEBAGO COUNTY
STA. 872+39.77

STATE OF ILLINOIS
DEPARTMENT OF TRANSPORTATION

ROUTE NO.	SECTION	COUNTY	TOTAL SHEETS	SHEET NO.
S. B. I. R. & L. 39	5HBD	WINNEBAGO	171	116
FED. ROAD DIST. NO. 7		ILLINOIS	FED. AID PROJECT-	

SHEET NO. 10
52 SHEETS

℄ ROADWAY AND PROFILE GRADE LINE

Location	Station	Offset	Theoretical Grade Elevations	Theoretical Grade Elevations Adjusted For Dead Load Deflection
Bk. S. Abut.	87137.611	0.000	798.458	798.458
℄ Brg. S. Abut.	87139.738	0.000	798.483	798.483
A	87149.692	0.000	798.600	798.605
B	87159.645	0.000	798.714	798.719
C	87169.599	0.000	798.826	798.828
℄ Brg. Pier 1	87184.135	0.000	798.984	798.984
D	87194.089	0.000	799.090	799.101
E	87204.043	0.000	799.193	799.213
F	87213.996	0.000	799.294	799.320
G	87223.950	0.000	799.393	799.416
H	87233.904	0.000	799.489	799.504
I	87243.857	0.000	799.582	799.589
℄ Brg. Pier 2	87251.402	0.000	799.652	799.652
J	87261.356	0.000	799.741	799.749
K	87271.309	0.000	799.828	799.845
L	87281.263	0.000	799.912	799.938
M	87291.217	0.000	799.994	800.019
N	87301.170	0.000	800.074	800.092
O	87311.124	0.000	800.151	800.159
℄ Brg. Pier 3	87318.430	0.000	800.206	800.206
P	87328.384	0.000	800.279	800.280
Q	87338.338	0.000	800.349	800.354
R	87348.291	0.000	800.417	800.423
℄ Brg. N. Abut.	87362.411	0.000	800.509	800.509
Bk. N. Abut.	87364.512	0.000	800.523	800.523

BEAM 13

Location	Station	Offset	Theoretical Grade Elevations	Theoretical Grade Elevations Adjusted For Dead Load Deflection
Bk. S. Abut.	87139.223	4.239	798.541	798.541
℄ Brg. S. Abut.	87141.337	4.208	798.565	798.565
A	87151.283	4.072	798.679	798.684
B	87161.231	3.951	798.791	798.796
C	87171.178	3.844	798.901	798.903
℄ Brg. Pier 1	87185.520	3.715	799.055	799.055
D	87195.468	3.643	799.159	799.170
E	87205.416	3.586	799.261	799.281
F	87215.364	3.544	799.361	799.387
G	87225.313	3.515	799.459	799.482
H	87235.262	3.501	799.554	799.569
I	87245.210	3.502	799.647	799.654
℄ Brg. Pier 2	87252.672	3.512	799.716	799.716
J	87262.620	3.538	799.805	799.814
K	87272.569	3.579	799.892	799.909
L	87282.517	3.634	799.977	800.003
M	87292.465	3.703	800.060	800.084
N	87302.413	3.787	800.140	800.159
O	87312.361	3.885	800.218	800.226
℄ Brg. Pier 3	87319.821	3.968	800.276	800.276
P	87329.769	4.092	800.350	800.351
Q	87339.715	4.230	800.422	800.427
R	87349.662	4.383	800.492	800.497
℄ Brg. N. Abut.	87364.000	4.628	800.589	800.589
Bk. N. Abut.	87366.113	4.667	800.603	800.603

BEAM 14

Location	Station	Offset	Theoretical Grade Elevations	Theoretical Grade Elevations Adjusted For Dead Load Deflection
Bk. S. Abut.	87141.489	10.207	798.657	798.657
℄ Brg. S. Abut.	87143.600	10.177	798.681	798.681
A	87153.539	10.044	798.795	798.800
B	87163.477	9.926	798.906	798.911
C	87173.416	9.822	799.015	799.017
℄ Brg. Pier 1	87187.745	9.698	799.168	799.168
D	87197.685	9.630	799.272	799.283
E	87207.625	9.576	799.374	799.393
F	87217.564	9.536	799.473	799.499
G	87227.504	9.511	799.570	799.593
H	87237.444	9.500	799.665	799.680
I	87247.384	9.504	799.757	799.764
℄ Brg. Pier 2	87254.839	9.517	799.825	799.825
J	87264.779	9.546	799.914	799.923
K	87274.719	9.589	800.001	800.018
L	87284.659	9.647	800.085	800.110
M	87294.598	9.720	800.167	800.192
N	87304.537	9.807	800.247	800.265
O	87314.476	9.908	800.325	800.333
℄ Brg. Pier 3	87321.931	9.994	800.382	800.382
P	87331.869	10.121	800.455	800.456
Q	87341.807	10.262	800.527	800.531
R	87351.745	10.417	800.596	800.602
℄ Brg. N. Abut.	87366.070	10.667	800.693	800.693
Bk. N. Abut.	87368.182	10.707	800.706	800.706

BONDED STAGE CONSTRUCTION JOINT

Location	Station	Offset	Theoretical Grade Elevations	Theoretical Grade Elevations Adjusted For Dead Load Deflection
Bk. S. Abut.	87142.777	13.605	798.667	798.667
℄ Brg. S. Abut.	87144.888	13.576	798.692	798.692
A	87154.821	13.445	798.810	798.815
B	87164.755	13.329	798.925	798.930
C	87174.689	13.227	799.037	799.040
℄ Brg. Pier 1	87189.011	13.105	799.194	799.194
D	87198.946	13.039	799.300	799.311
E	87208.881	12.987	799.403	799.423
F	87218.816	12.949	799.503	799.529
G	87228.751	12.926	799.601	799.624
H	87238.686	12.917	799.696	799.710
I	87248.621	12.922	799.788	799.794
℄ Brg. Pier 2	87256.072	12.936	799.855	799.855
J	87266.007	12.967	799.942	799.951
K	87275.942	13.012	800.027	800.044
L	87285.877	13.072	800.109	800.134
M	87295.811	13.147	800.188	800.213
N	87305.746	13.235	800.265	800.283
O	87315.680	13.339	800.338	800.346
℄ Brg. Pier 3	87323.130	13.425	800.392	800.392
P	87333.063	13.554	800.461	800.462
Q	87342.996	13.697	800.527	800.532
R	87352.929	13.854	800.591	800.596
℄ Brg. N. Abut.	87367.248	14.106	800.678	800.678
Bk. N. Abut.	87369.358	14.146	800.690	800.690

BEAM 15

Location	Station	Offset	Theoretical Grade Elevations	Theoretical Grade Elevations Adjusted For Dead Load Deflection
Bk. S. Abut.	87143.374	15.180	798.642	798.642
℄ Brg. S. Abut.	87145.484	15.151	798.668	798.668
A	87155.415	15.021	798.785	798.790
B	87165.347	14.906	798.900	798.905
C	87175.278	14.805	799.012	799.014
℄ Brg. Pier 1	87189.597	14.684	799.169	799.169
D	87199.530	14.619	799.274	799.285
E	87209.462	14.567	799.377	799.397
F	87219.395	14.530	799.477	799.503
G	87229.328	14.508	799.575	799.598
H	87239.260	14.500	799.669	799.684
I	87249.193	14.507	799.761	799.768
℄ Brg. Pier 2	87256.643	14.521	799.828	799.828
J	87266.576	14.553	799.916	799.924
K	87276.508	14.599	800.000	800.017
L	87286.441	14.659	800.082	800.107
M	87296.373	14.735	800.161	800.186
N	87306.305	14.824	800.237	800.256
O	87316.237	14.928	800.311	800.319
℄ Brg. Pier 3	87323.685	15.016	800.364	800.364
P	87333.616	15.145	800.433	800.434
Q	87343.547	15.289	800.499	800.504
R	87353.478	15.447	800.563	800.568
℄ Brg. N. Abut.	87367.793	15.700	800.649	800.649
Bk. N. Abut.	87369.903	15.740	800.662	800.662

BEAM 16

Location	Station	Offset	Theoretical Grade Elevations	Theoretical Grade Elevations Adjusted For Dead Load Deflection
Bk. S. Abut.	87146.008	22.144	798.534	798.534
℄ Brg. S. Abut.	87148.116	22.116	798.559	798.559
A	87158.038	21.990	798.676	798.681
B	87167.959	21.878	798.790	798.795
C	87177.881	21.781	798.901	798.903
℄ Brg. Pier 1	87192.185	21.666	799.057	799.057
D	87202.108	21.604	799.161	799.172
E	87212.030	21.556	799.263	799.283
F	87221.953	21.523	799.363	799.389
G	87231.876	21.505	799.459	799.482
H	87241.799	21.500	799.553	799.568
I	87251.721	21.510	799.644	799.651
℄ Brg. Pier 2	87259.163	21.528	799.711	799.711
J	87269.086	21.563	799.797	799.806
K	87279.009	21.613	799.881	799.898
L	87288.931	21.677	799.962	799.987
M	87298.853	21.756	800.040	800.065
N	87308.775	21.849	800.116	800.134
O	87318.697	21.957	800.189	800.197
℄ Brg. Pier 3	87326.138	22.047	800.241	800.241
P	87336.059	22.180	800.310	800.311
Q	87345.979	22.327	800.375	800.379
R	87355.900	22.488	800.438	800.443
℄ Brg. N. Abut.	87370.200	22.747	800.523	800.523
Bk. N. Abut.	87372.308	22.788	800.536	800.536

DESIGNED RT Bozo
CHECKED Sheila E. Magnuson
DRAWN R. Doty
CHECKED RTB SEM

May 17 1990
EXAMINED Greg J. Kaspar
ENGINEER OF BRIDGE DESIGN
PASSED Ralph E. Anderson
ENGINEER OF BRIDGES AND STRUCTURES
APPROVED
DIRECTOR OF HIGHWAYS

E-S 1-6-82

Note: Work this sheet with sheets #9 & #11 of 52.

TOP OF SLAB ELEVATIONS
EAST BOUND LANES
F.A.I. RT. 39 SEC. 5HBD
WINNEBAGO COUNTY
STA. 872+39.77

STATE OF ILLINOIS
DEPARTMENT OF TRANSPORTATION

ROUTE NO.	SECTION	COUNTY	TOTAL SHEETS	SHEET NO.
S.B.I. F.A.I. 39	5HBD	WINNEBAGO	171	117
FED. ROAD DIST. NO. 7		ILLINOIS	FED. AID PROJECT-	

SHEET NO. 11
52 SHEETS

BEAM 16A

Location	Station	Offset	Theoretical Grade Elevations	Theoretical Grade Elevations Adjusted For Dead Load Deflection
Bk. S. Abut.	87147.887	27.119	798.456	798.456
℄ Brg. S. Abut.	87149.993	27.091	798.481	798.481
A	87159.907	26.968	798.597	798.613
B	87169.822	26.859	798.711	798.733
C	87179.737	26.764	798.822	798.841
℄ Brg. Pier 1	87194.031	26.653	798.976	798.976
D	87203.946	26.594	799.081	799.119
E	87213.862	26.549	799.182	799.251
F	87223.777	26.519	799.281	799.365
G	87233.693	26.503	799.377	799.457
H	87243.608	26.501	799.470	799.535
I	87253.524	26.514	799.560	799.589
℄ Brg. Pier 2	87260.961	26.533	799.627	799.627

EAST LONGITUDINAL BONDED CONST. JOINT

Location	Station	Offset	Theoretical Grade Elevations	Theoretical Grade Elevations Adjusted For Dead Load Deflection
Bk. S. Abut.	87148.262	28.114	798.441	798.441
℄ Brg. S. Abut.	87150.368	28.086	798.466	798.466
A	87160.281	27.963	798.582	798.597
B	87170.194	27.855	798.695	798.717
C	87180.107	27.761	798.806	798.825
℄ Brg. Pier 1	87194.400	27.651	798.960	798.960
D	87204.313	27.592	799.064	799.102
E	87214.228	27.548	799.166	799.235
F	87224.142	27.518	799.264	799.349
G	87234.056	27.502	799.360	799.441
H	87243.970	27.501	799.453	799.518
I	87253.884	27.515	799.544	799.572
℄ Brg. Pier 2	87261.320	27.534	799.610	799.610
J	87271.234	27.573	799.696	799.702
K	87281.148	27.626	799.779	799.792
L	87291.062	27.693	799.859	799.878
M	87300.975	27.775	799.937	799.955
N	87310.888	27.871	800.011	800.025
O	87320.801	27.982	800.084	800.090
℄ Brg. Pier 3	87328.236	28.074	800.136	800.136
P	87338.148	28.210	800.204	800.204
Q	87348.060	28.360	800.268	800.272
R	87357.972	28.525	800.330	800.335
℄ Brg. N. Abut.	87372.260	28.788	800.415	800.415
Bk. N. Abut.	87374.366	28.829	800.427	800.427

BEAM 17

Location	Station	Offset	Theoretical Grade Elevations	Theoretical Grade Elevations Adjusted For Dead Load Deflection
Bk. S. Abut.	87150.090	32.965	798.365	798.365
℄ Brg. S. Abut.	87152.195	32.938	798.390	798.390
A	87162.013	32.583	798.509	798.513
B	87171.832	32.242	798.625	798.629
C	87181.652	31.916	798.739	798.740
℄ Brg. Pier 1	87195.810	31.470	798.899	798.899
D	87205.632	31.178	799.006	799.014
E	87215.455	30.900	799.111	799.126
F	87225.278	30.636	799.213	799.232
G	87235.103	30.387	799.312	799.329
H	87244.928	30.152	799.409	799.420
I	87254.753	29.930	799.503	799.508
℄ Brg. Pier 2	87262.123	29.774	799.572	799.572
J	87271.949	29.577	799.662	799.669
K	87281.777	29.396	799.749	799.762
L	87291.604	29.228	799.833	799.852
M	87301.432	29.074	799.914	799.932
N	87311.261	28.934	799.993	800.006
O	87321.152	28.986	800.066	800.072
℄ Brg. Pier 3	87328.585	29.079	800.119	800.119
P	87338.496	29.215	800.186	800.186
Q	87348.407	29.366	800.251	800.254
R	87358.317	29.531	800.313	800.317
℄ Brg. N. Abut.	87372.603	29.795	800.397	800.397
Bk. N. Abut.	87374.709	29.836	800.409	800.409

BEAM 17A

Location	Station	Offset	Theoretical Grade Elevations	Theoretical Grade Elevations Adjusted For Dead Load Deflection
Bk. S. Abut.	87151.183	35.868	798.320	798.320
℄ Brg. S. Abut.	87153.287	35.841	798.344	798.344
A	87163.101	35.487	798.463	798.467
B	87172.916	35.148	798.579	798.583
C	87182.731	34.823	798.693	798.694
℄ Brg. Pier 1	87196.884	34.380	798.852	798.852
D	87206.702	34.090	798.959	798.967
E	87216.521	33.813	799.063	799.078
F	87226.340	33.551	799.165	799.184
G	87236.160	33.303	799.264	799.281
H	87245.981	33.069	799.360	799.371
I	87255.802	32.850	799.454	799.459
℄ Brg. Pier 2	87263.169	32.694	799.523	799.523
J	87272.991	32.499	799.612	799.619
K	87282.814	32.319	799.699	799.712
L	87292.638	32.152	799.783	799.802
M	87302.462	32.000	799.864	799.882
N	87312.287	31.861	799.942	799.955
O	87322.173	31.915	800.015	800.021
℄ Brg. Pier 3	87329.603	32.009	800.067	800.067
P	87339.510	32.147	800.134	800.134
Q	87349.417	32.299	800.199	800.202
R	87359.322	32.466	800.260	800.264
℄ Brg. N. Abut.	87373.602	32.731	800.345	800.345
Bk. N. Abut.	87375.707	32.773	800.356	800.356

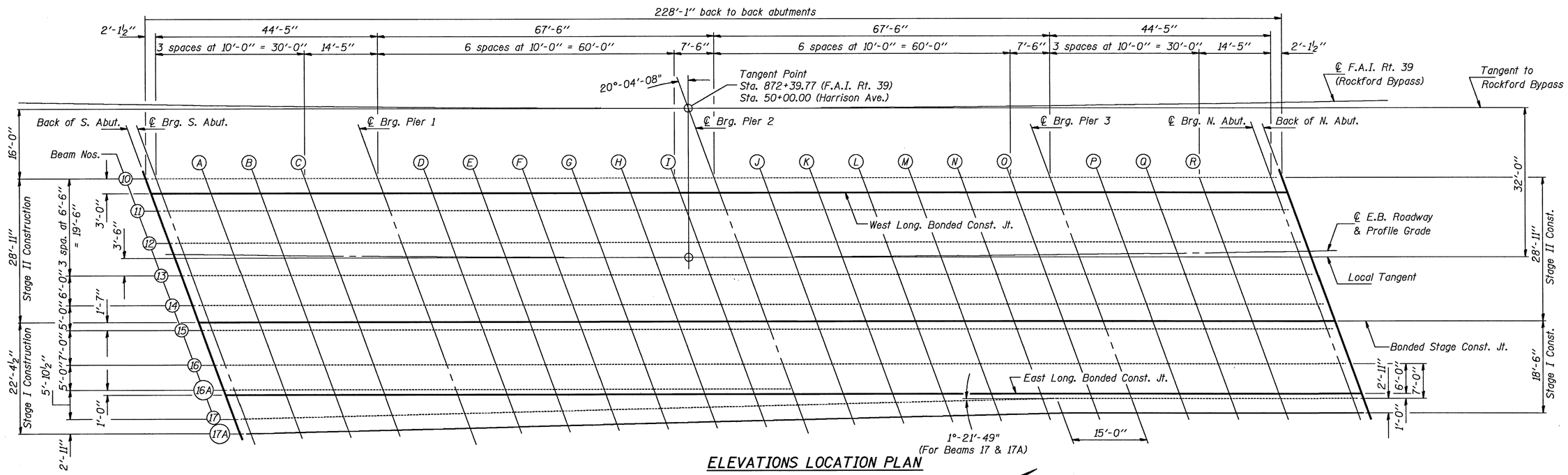

ELEVATIONS LOCATION PLAN

N

DESIGNED	RT Boro
CHECKED	Sheila E. Mozenhan
DRAWN	R. Doty
CHECKED	RTB SEM

May 17 1990
EXAMINED Greg J. Kaspar — ENGINEER OF BRIDGE DESIGN
PASSED Ralph E. Anderson — ENGINEER OF BRIDGES AND STRUCTURES
APPROVED — DIRECTOR OF HIGHWAYS

E-S 1-6-82

Note: Elevations along beams 17 and 17A are at 9'-11" cts. from S. Abut. to 15'-0" South of Pier 3 and at 10'-0" cts. for the remainder.

Note: Work this sheet with sheets #9 & #10 of 52.

TOP OF SLAB ELEVATIONS
EAST BOUND LANES
F.A.I. RT. 39 SEC. 5HBD
WINNEBAGO COUNTY
STA. 872+39.77

STATE OF ILLINOIS
DEPARTMENT OF TRANSPORTATION

ROUTE NO.	SECTION	COUNTY	TOTAL SHEETS	SHEET NO.
S.B.I. F.A.I. 39	5HBD	WINNEBAGO	171	118
FED. ROAD DIST. NO. 7		ILLINOIS	FED. AID PROJECT-	

SHEET NO. 12
52 SHEETS

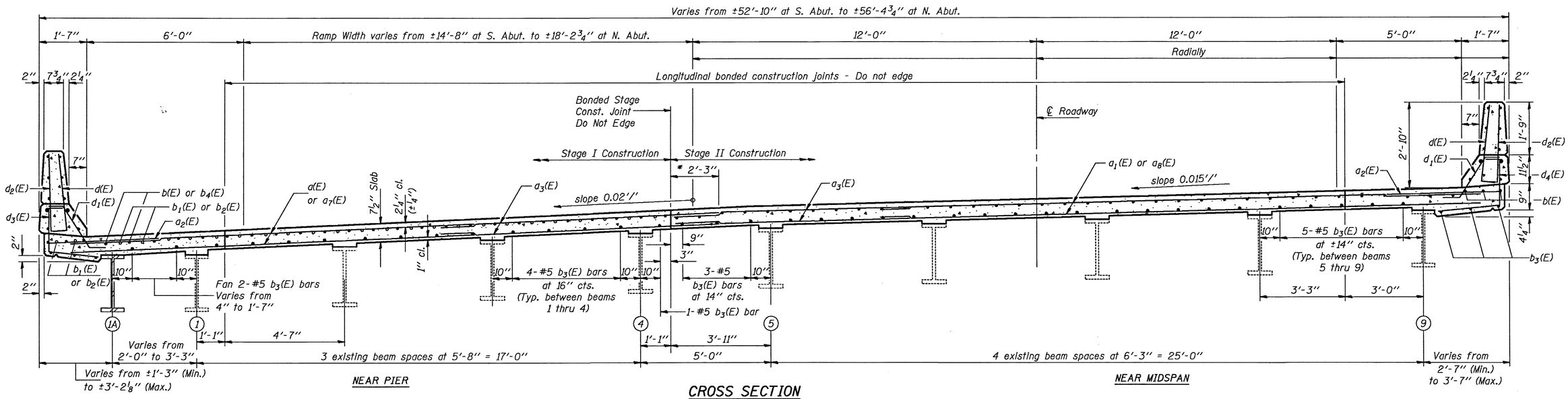

CROSS SECTION
(West Bound Lanes - Looking North)

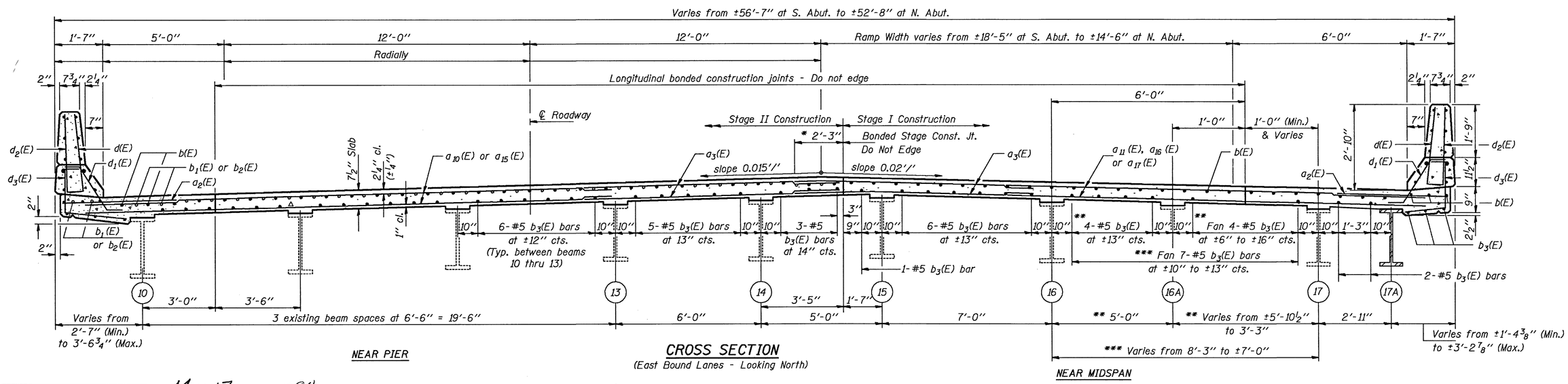

CROSS SECTION
(East Bound Lanes - Looking North)

DESIGNED	RT Boro
CHECKED	Sheila E. Mozynska
DRAWN	R. Doty
CHECKED	RTB SEM

May 17 1990
EXAMINED Greg J. Kaspar — ENGINEER OF BRIDGE DESIGN
PASSED Ralph E. Anderson — ENGINEER OF BRIDGES AND STRUCTURES
APPROVED — DIRECTOR OF HIGHWAYS

* Reinforcement bars in this area shall be tied with double the number of ties normally used. Min. lap of #5 a_3(E) bars at this location = 2'-2".
** From South Abutment to Pier #2.
*** From Pier #2 to North Abutment.

Notes: Reinforcement bars designated (E) shall be epoxy coated.
Work this sheet with sheets #13 thru #20 of 52.

SUPERSTRUCTURE DETAILS
F.A.I. RT. 39 SEC. 5HBD
WINNEBAGO COUNTY
STA. 872+39.77

ROUTE NO.	SECTION	COUNTY	TOTAL SHEETS	SHEET NO.
S. B. I. F. A. I. 39	5HBD	WINNEBAGO	171	119
FED. ROAD DIST. NO. 7	ILLINOIS	FED. AID PROJECT-		

SHEET NO. 13
52 SHEETS

STATE OF ILLINOIS
DEPARTMENT OF TRANSPORTATION

MIN. BAR LAP

#5 bars = 1'-8"
(Except at Stage Line as shown in Cross Section)

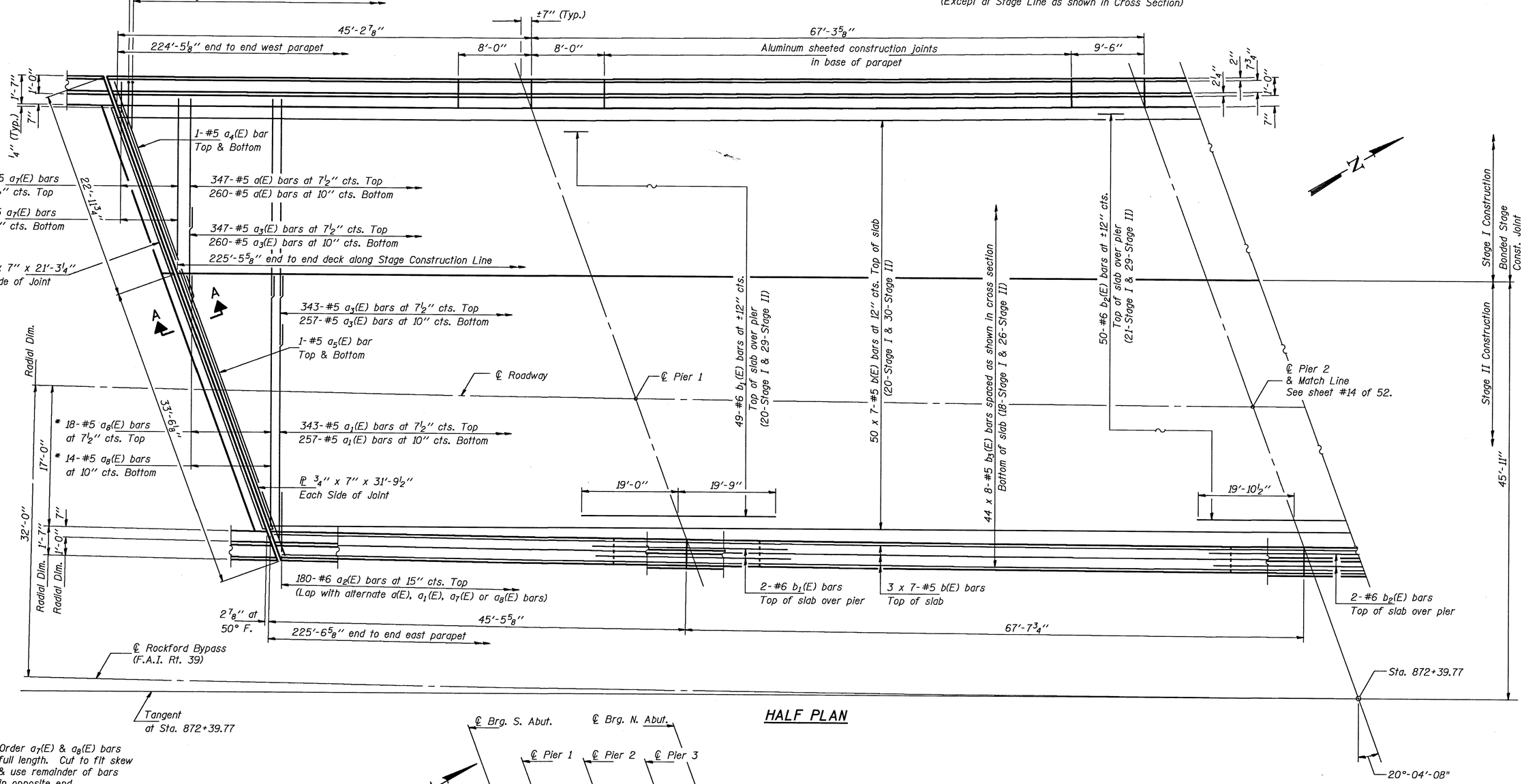

HALF PLAN

* Order a_7(E) & a_8(E) bars full length. Cut to fit skew & use remainder of bars in opposite end.

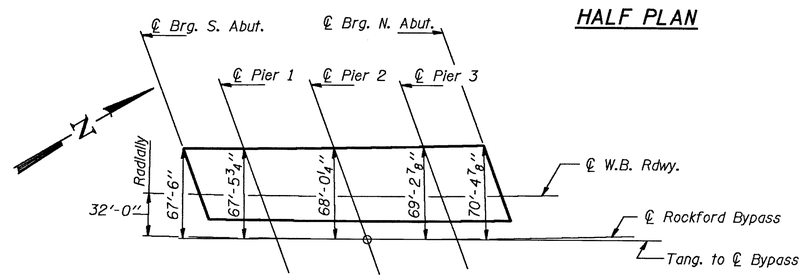

OFFSET DIMENSIONS FOR DECK

Notes: See sheet #16 of 52 for superstructure details, Section A-A and Bill of Material.
For Cross Section see sheet #12 of 52.
Reinforcement bars designated (E) shall be epoxy coated.
Bars indicated thus 20 x 3-#5 etc. indicates 20 lines of bars with 3 lengths per line.
See sheet #1 of 52 for drainage scupper spacing. Cut longitudinal reinforcement bars to clear scuppers.
Horizontal dimensions are given along inside face of parapet except as shown.
See sheet #15 of 52 for parapet reinforcement.

DESIGNED	RT Boo
CHECKED	Sheler E. Mazuhar
DRAWN	R. Doty
CHECKED	RTB SEM

May 17 1990
EXAMINED Greg. O. Kaspar — ENGINEER OF BRIDGE DESIGN
PASSED Ralph E. Anderson — ENGINEER OF BRIDGES AND STRUCTURES
APPROVED — DIRECTOR OF HIGHWAYS

SUPERSTRUCTURE
WEST BOUND LANES
F.A.I. RT. 39 SEC. 5HBD
WINNEBAGO COUNTY
STA. 872+39.77

STATE OF ILLINOIS
DEPARTMENT OF TRANSPORTATION

ROUTE NO.	SECTION	COUNTY	TOTAL SHEETS	SHEET NO.
S.B.I. F.A.I. 39	5HBD	WINNEBAGO	171	120
FED. ROAD DIST. NO. 7		ILLINOIS	FED. AID PROJECT-	

SHEET NO. 14
52 SHEETS

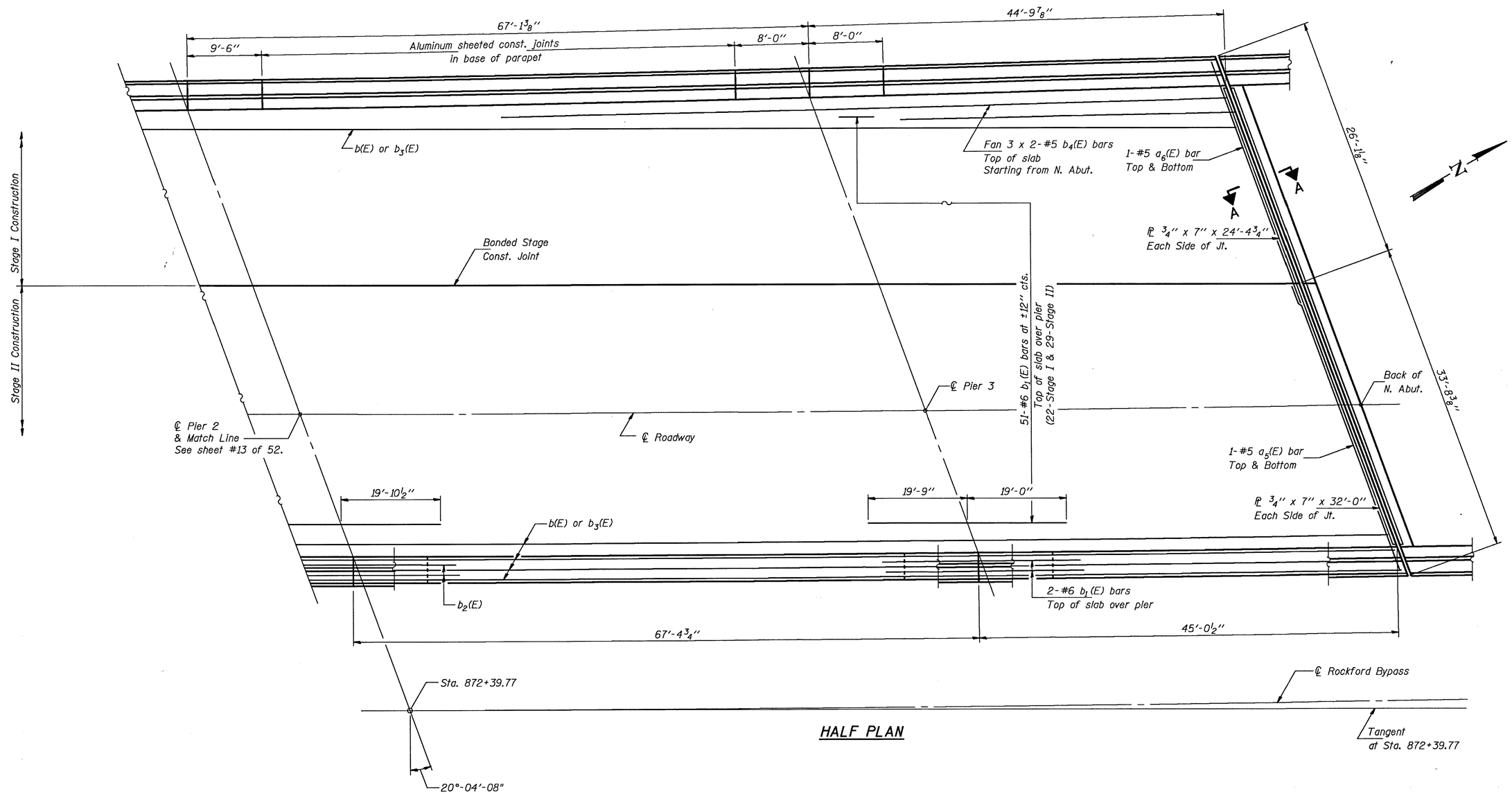

HALF PLAN

DESIGNED	RTBoro
CHECKED	Sheila E. Mozingo
DRAWN	R. Doty
CHECKED	RTB SEM

May 17 1990
EXAMINED Greg D. Kaspar
ENGINEER OF BRIDGE DESIGN
PASSED Ralph E. Anderson
ENGINEER OF BRIDGES AND STRUCTURES
APPROVED
DIRECTOR OF HIGHWAYS

SUPERSTRUCTURE
WEST BOUND LANES
F.A.I. RT. 39 SEC. 5HBD
WINNEBAGO COUNTY
STA. 872+39.77

STATE OF ILLINOIS
DEPARTMENT OF TRANSPORTATION

ROUTE NO.	SECTION	COUNTY	TOTAL SHEETS	SHEET NO.
S. B. I. F. A. I. 39	5HBD	WINNEBAGO	171	121
FED. ROAD DIST. NO. 7		ILLINOIS	FED. AID PROJECT-	

SHEET NO. 15
52 SHEETS

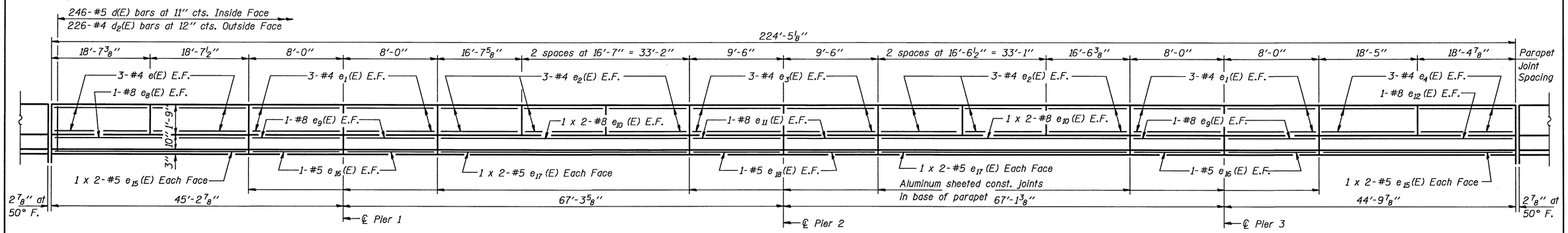

INSIDE ELEVATION OF WEST PARAPET
(West Bound Lanes)

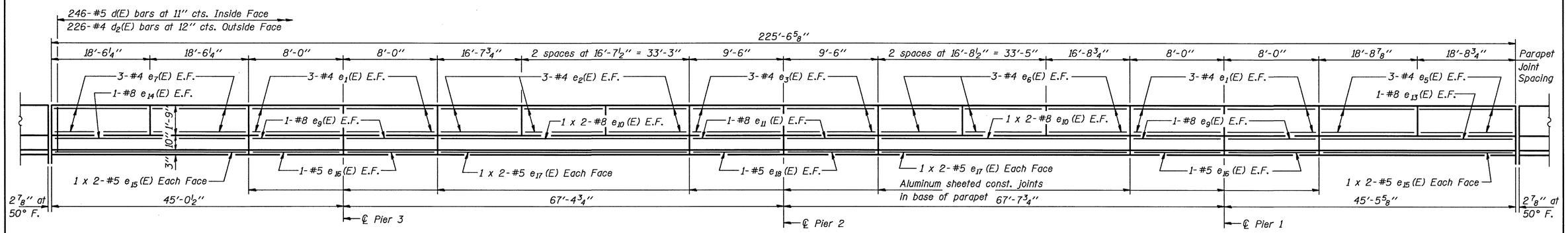

INSIDE ELEVATION OF EAST PARAPET
(West Bound Lanes)

MIN. BAR LAPS
#5 bars = 1'-8"
#8 bars = 3'-5"

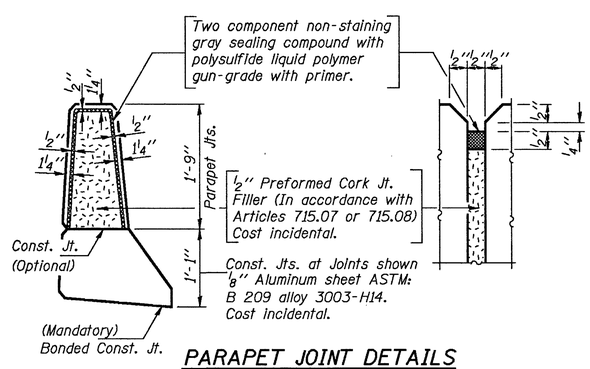

PARAPET JOINT DETAILS

Notes: Reinforcement bars designated (E) shall be epoxy coated.
See sheet #16 of 52 for Bill of Material.
Bars indicated thus 20 x 3-#5 etc. indicates 20 lines of bars with 3 lengths per line.

DESIGNED	RT Boro
CHECKED	Sheila E. Moynihan
DRAWN	R. Doty
CHECKED	RTB SEM

May 17 1990
EXAMINED Jaj. J. Kaspar
ENGINEER OF BRIDGE DESIGN
PASSED Ralph E. Anderson
ENGINEER OF BRIDGES AND STRUCTURES
APPROVED
DIRECTOR OF HIGHWAYS

WEST BOUND PARAPETS
SUPERSTRUCTURE DETAILS
F.A.I. RT. 39 SEC. 5HBD
WINNEBAGO COUNTY
STA. 872+39.77

STATE OF ILLINOIS
DEPARTMENT OF TRANSPORTATION

ROUTE NO.	SECTION	COUNTY	TOTAL SHEETS	SHEET NO.
S.B.I. R. & I. 39	5HBD	WINNEBAGO	171	122
FED. ROAD DIST. NO. 7	ILLINOIS	FED. AID PROJECT-		

SHEET NO. 16
52 SHEETS

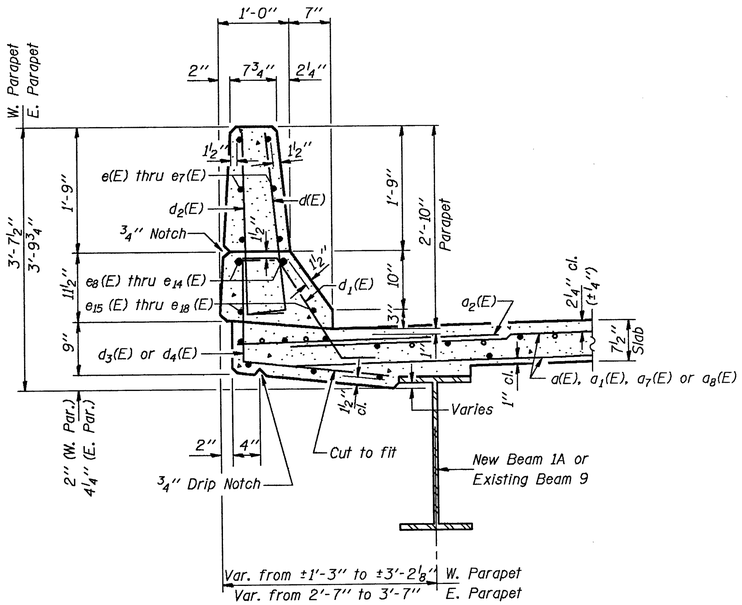

SECTION THRU PARAPET

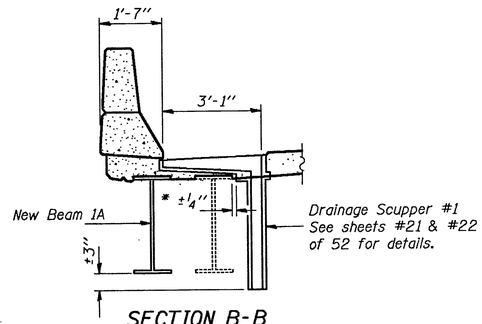

SECTION B-B

* Locate as close as possible to existing Beam #1.

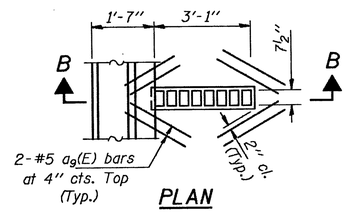

PLAN

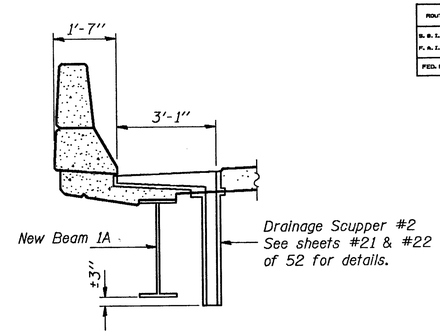

SECTION C-C

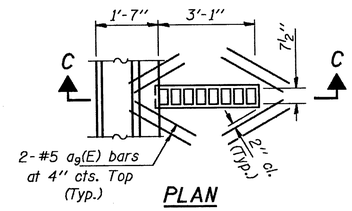

PLAN

SUPERSTRUCTURE WEST BOUND LANES BILL OF MATERIAL

Bar	No.	Size	Length	Shape
a(E)	607	#5	19'-5"	
a_1(E)	600	#5	25'-2"	
a_2(E)	360	#6	4'-6"	
a_3(E)	1207	#5	8'-0"	
a_4(E)	2	#5	24'-3"	
a_5(E)	4	#5	32'-6"	
a_6(E)	2	#5	27'-3"	
a_7(E)	25	#5	25'-9"	
a_8(E)	32	#5	30'-7"	
a_9(E)	16	#5	2'-0"	
b(E)	392	#5	33'-8"	
b_1(E)	108	#6	38'-9"	
b_2(E)	54	#6	39'-9"	
b_3(E)	352	#5	29'-8"	
b_4(E)	6	#5	40'-0"	
d(E)	492	#5	3'-0"	
d_1(E)	492	#5	2'-7"	
d_2(E)	452	#4	3'-0"	
d_3(E)	256	#4	4'-11"	
d_4(E)	226	#4	4'-11"	
e(E)	12	#4	18'-5"	
e_1(E)	48	#4	7'-9"	
e_2(E)	54	#4	16'-4"	
e_3(E)	24	#4	9'-3"	
e_4(E)	12	#4	18'-2"	
e_5(E)	12	#4	18'-6"	
e_6(E)	18	#4	16'-6"	
e_7(E)	12	#4	18'-3"	
e_8(E)	2	#8	37'-0"	
e_9(E)	16	#8	7'-9"	
e_{10}(E)	16	#8	26'-9"	
e_{11}(E)	8	#8	9'-3"	
e_{12}(E)	2	#8	36'-7"	
e_{13}(E)	2	#8	37'-2"	
e_{14}(E)	2	#8	36'-9"	
e_{15}(E)	16	#5	19'-6"	
e_{16}(E)	16	#5	7'-9"	
e_{17}(E)	16	#5	26'-0"	
e_{18}(E)	8	#5	9'-3"	
Reinforcement Bars, Epoxy Coated			Lbs.	87,390
Class X Concrete Superstructure			Cu. Yd.	357.9

Reinforcement bars designated (E) shall be epoxy coated.

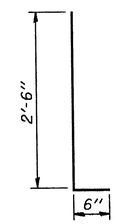

BARS d(E) & d_2(E)

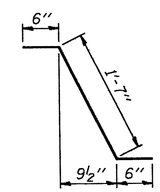

BAR d_1(E)

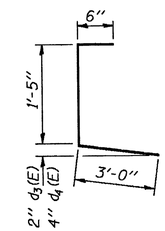

BARS d_3(E) & d_4(E)

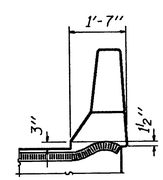

END OF SEAL TREATMENT

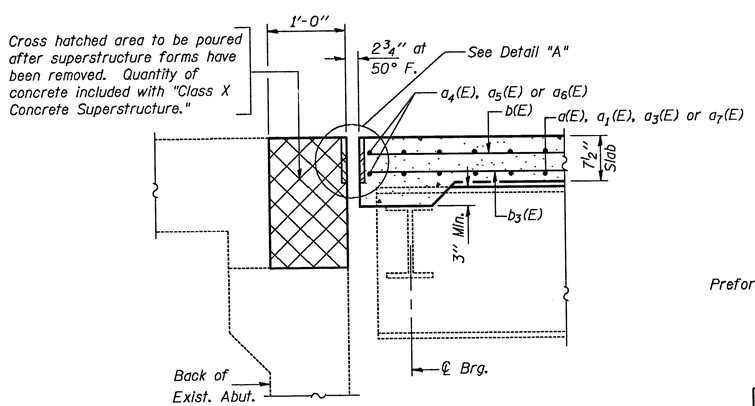

SECTION A-A
(Dimensions @ Rt. L's)

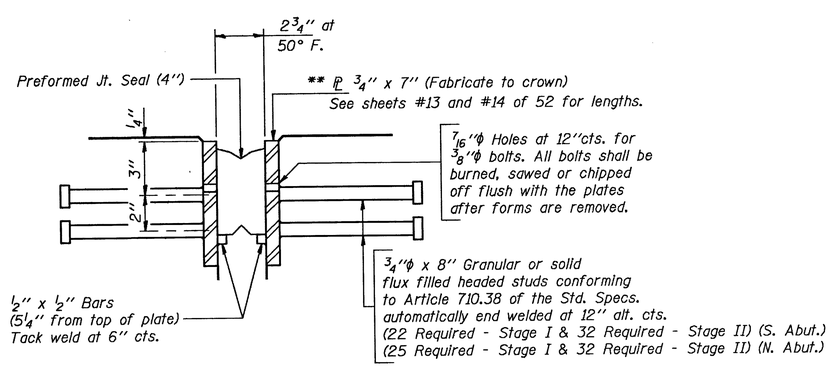

DETAIL "A"
(Dimensions are at Rt. L's)

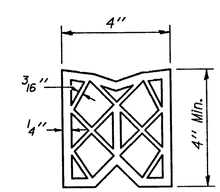

PREFORMED JOINT SEAL (4")

** Furnish in segments of 25 ft. maximum length. Maximum space between installed segments shall be 3/16". Seal space with Silicone Sealant suitable for Structural Steel. After fabrication all surfaces of the steel plates shall be given one shop coat of paint specified for New Structural Steel.

DESIGNED	R.T. Boro
CHECKED	Sheila E. Moynihan
DRAWN	R. Doty
CHECKED	RTB SEM

May 17 1990
EXAMINED Jaj J. Kaspar — ENGINEER OF BRIDGE DESIGN
PASSED Ralph E. Anderson — ENGINEER OF BRIDGES AND STRUCTURES
APPROVED — DIRECTOR OF HIGHWAYS

SUPERSTRUCTURE DETAILS
WEST BOUND LANES
F.A.I. RT. 39 SEC. 5HBD
WINNEBAGO COUNTY
STA. 872+39.77

ROUTE NO.	SECTION	COUNTY	TOTAL SHEETS	SHEET NO.
S. B. I. F. A. I. 39	5HBD	WINNEBAGO	171	123
FED. ROAD DIST. NO. 7		ILLINOIS	FED. AID PROJECT-	

SHEET NO. 17
52 SHEETS

STATE OF ILLINOIS
DEPARTMENT OF TRANSPORTATION

MIN. BAR LAP

#5 bars = 1'-8"
(Except at Stage Line as shown in Cross Section)

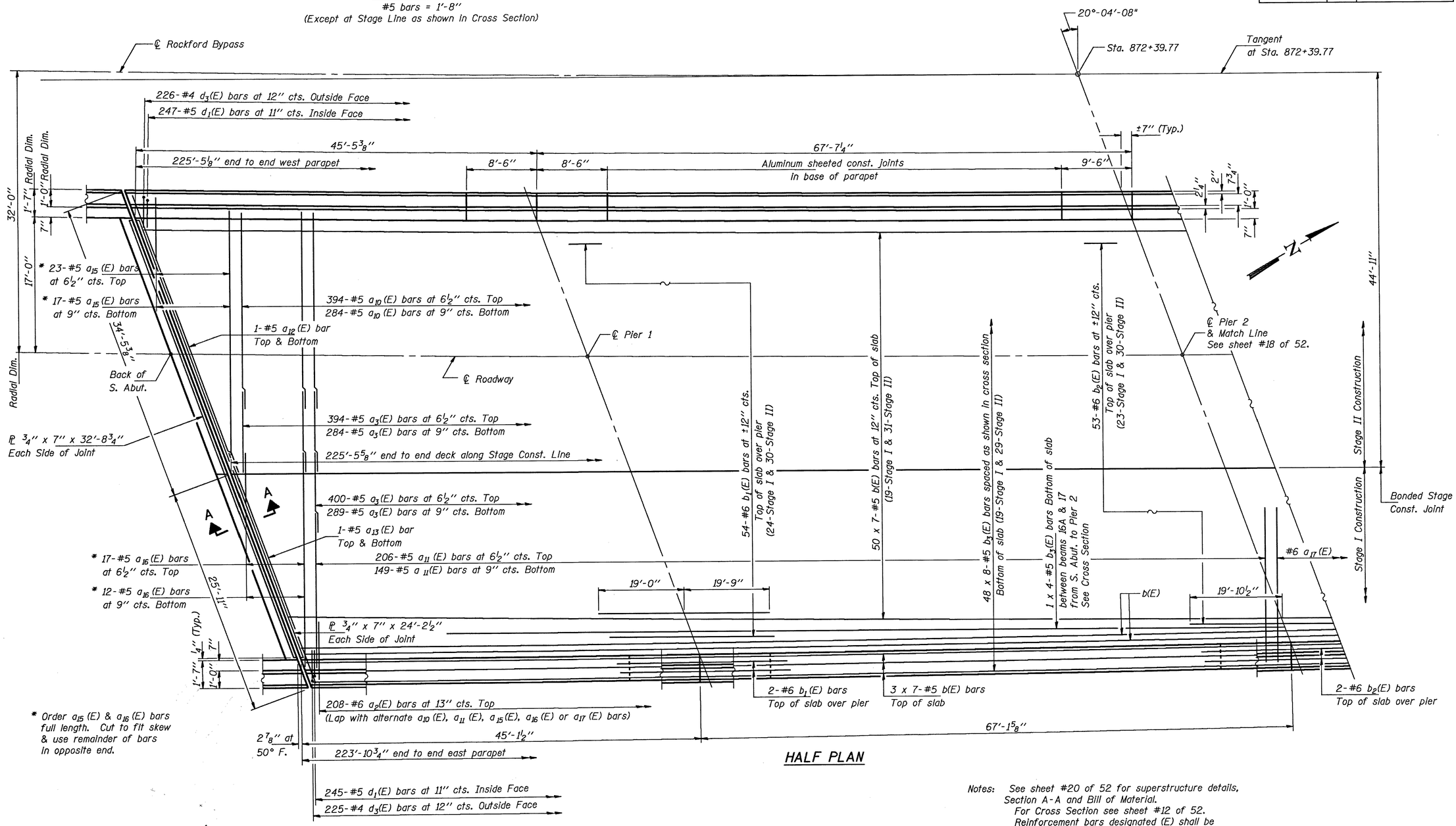

* Order a_{15} (E) & a_{16} (E) bars full length. Cut to fit skew & use remainder of bars in opposite end.

HALF PLAN

Notes: See sheet #20 of 52 for superstructure details, Section A-A and Bill of Material.
For Cross Section see sheet #12 of 52.
Reinforcement bars designated (E) shall be epoxy coated.
Bars indicated thus 20 x 3-#5 etc. indicates 20 lines of bars with 3 lengths per line.
See sheet #1 of 52 for drainage scupper spacing. Cut longitudinal reinforcement bars to clear scuppers.
Horizontal dimensions are given along inside face of parapet except as shown.
See sheet #19 of 52 for parapet reinforcement.

DESIGNED	RTBozo
CHECKED	Sheila E. Moynihan
DRAWN	R. Doty
CHECKED	RTB sem

May 17 1990

EXAMINED Graj J. Kaspar — ENGINEER OF BRIDGE DESIGN

PASSED Ralph E. Anderson — ENGINEER OF BRIDGES AND STRUCTURES

APPROVED — DIRECTOR OF HIGHWAYS

SUPERSTRUCTURE
EAST BOUND LANES
F.A.I. RT. 39 SEC. 5HBD
WINNEBAGO COUNTY
STA. 872+39.77

STATE OF ILLINOIS
DEPARTMENT OF TRANSPORTATION

ROUTE NO.	SECTION	COUNTY	TOTAL SHEETS	SHEET NO.
S. B. I. / F. A. I.	5HBD	WINNEBAGO	171	124
FED. ROAD DIST. NO. 7	ILLINOIS	FED. AID PROJECT-		

SHEET NO. 18
52 SHEETS

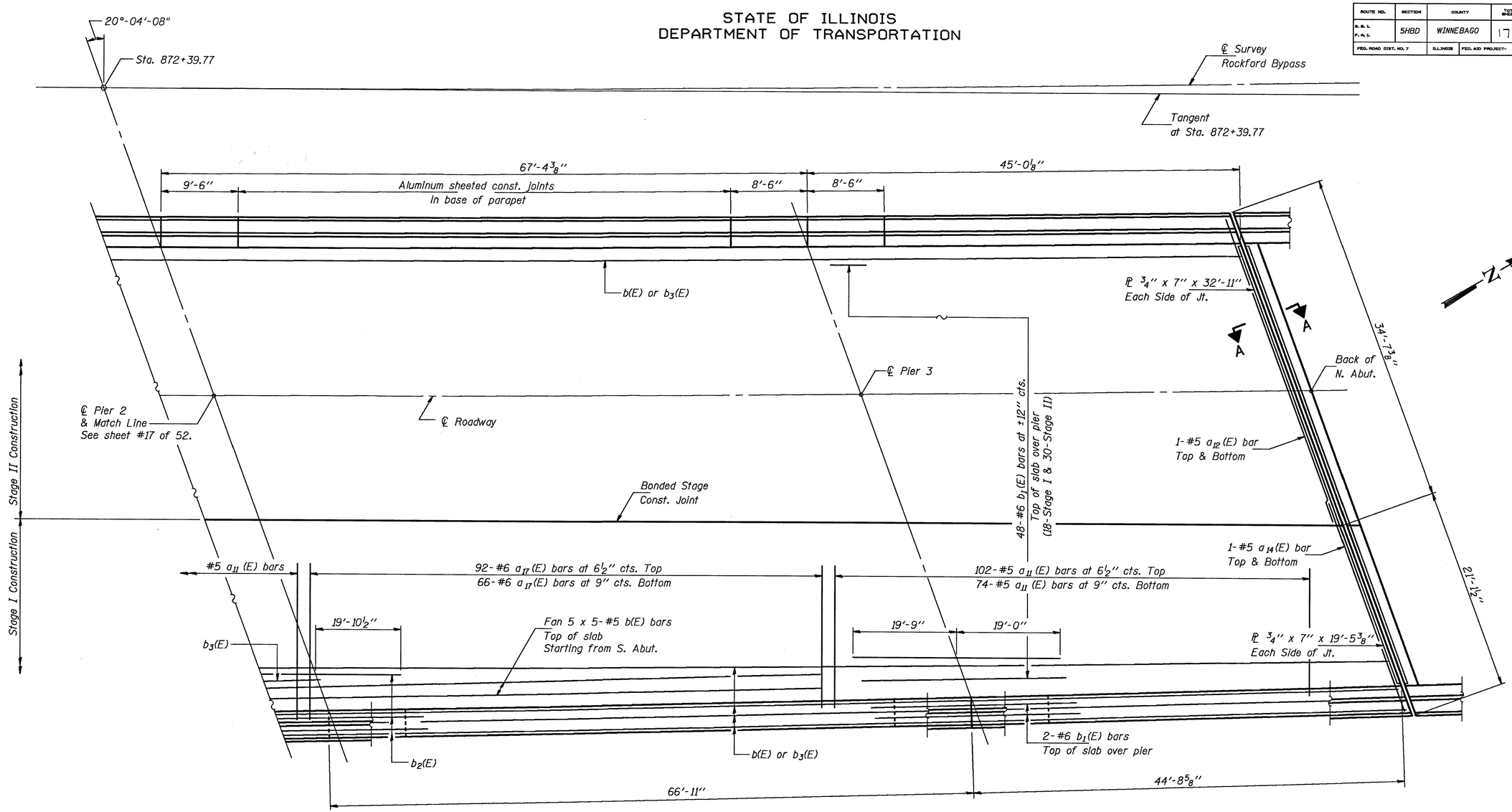

HALF PLAN

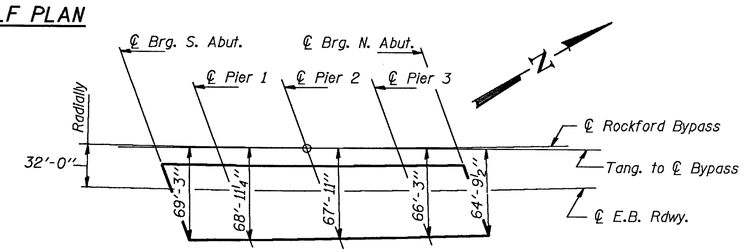

OFFSET DIMENSIONS FOR DECK

DESIGNED	RTBozo
CHECKED	Shala E. Moynihan
DRAWN	R. Doty
CHECKED	RTB SEM

May 17 1990

EXAMINED Graj J. Kaspar
ENGINEER OF BRIDGE DESIGN

PASSED Ralph E. Anderson
ENGINEER OF BRIDGES AND STRUCTURES

APPROVED
DIRECTOR OF HIGHWAYS

SUPERSTRUCTURE
EAST BOUND LANES
F.A.I. RT. 39 SEC. 5HBD
WINNEBAGO COUNTY
STA. 872+39.77

ROUTE NO.	SECTION	COUNTY	TOTAL SHEETS	SHEET NO.
S.B.I. F.A.I. 39	5HBD	WINNEBAGO	171	125
FED. ROAD DIST. NO. 7		ILLINOIS	FED. AID PROJECT-	

SHEET NO. 19
52 SHEETS

STATE OF ILLINOIS
DEPARTMENT OF TRANSPORTATION

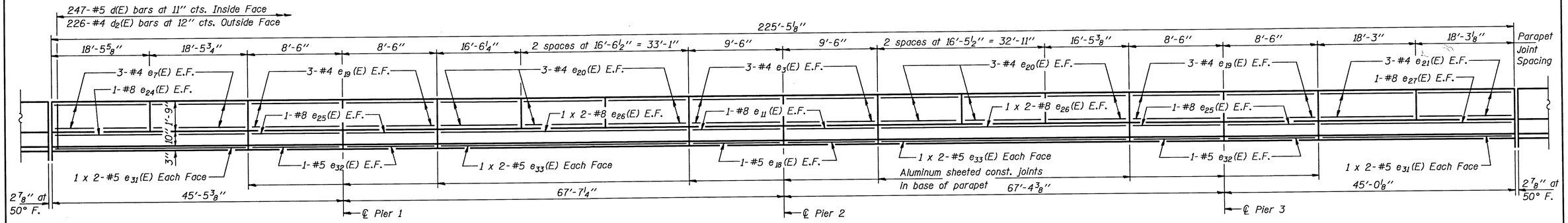

INSIDE ELEVATION OF WEST PARAPET
(East Bound Lanes)

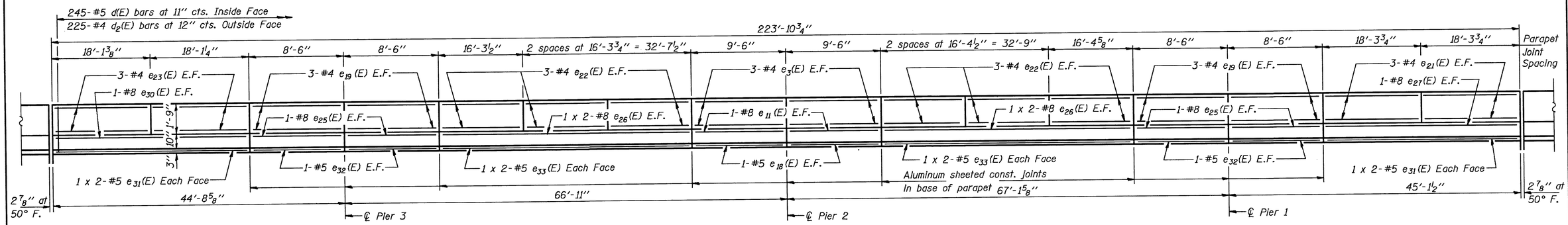

INSIDE ELEVATION OF EAST PARAPET
(East Bound Lanes)

MIN. BAR LAPS
#5 bars = 1'-8"
#8 bars = 3'-5"

Notes: Reinforcement bars designated (E) shall be epoxy coated.
See sheet #20 of 52 for Bill of Material.
Bars indicated thus 20 x 3-#5 etc. indicates 20 lines of bars with 3 lengths per line.
See sheet #15 of 52 for parapet joint details.

DESIGNED	RT Boro
CHECKED	Shalu E. Moynihan
DRAWN	R. Doty
CHECKED	RTB SEM

May 17 1990
EXAMINED Jaj J. Kaspar
ENGINEER OF BRIDGE DESIGN
PASSED Ralph E. Anderson
ENGINEER OF BRIDGES AND STRUCTURES
APPROVED
DIRECTOR OF HIGHWAYS

EAST BOUND PARAPETS
SUPERSTRUCTURE DETAILS
F.A.I. RT. 39 SEC. 5HBD
WINNEBAGO COUNTY
STA. 872+39.77

STATE OF ILLINOIS
DEPARTMENT OF TRANSPORTATION

ROUTE NO.	SECTION	COUNTY	TOTAL SHEETS	SHEET NO.
S.B.I. F.A.I. 39	5HBD	WINNEBAGO	171	126
FED. ROAD DIST. NO. 7	ILLINOIS	FED. AID PROJECT-		

SHEET NO. 20
52 SHEETS

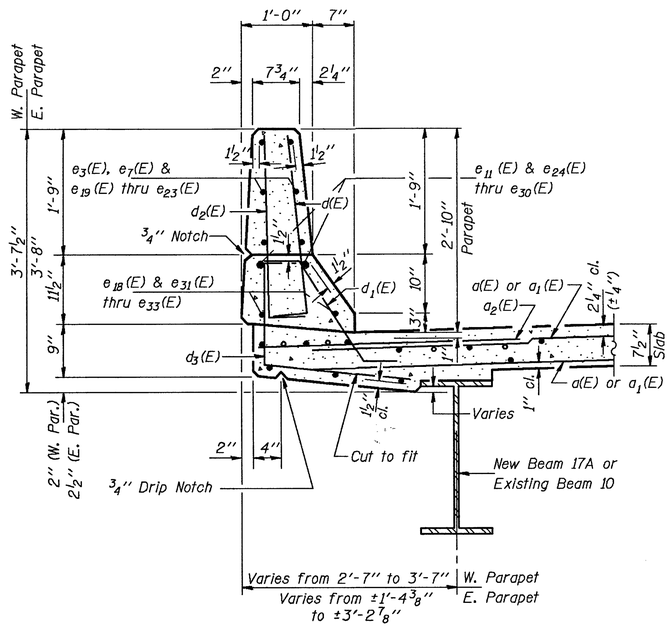

SECTION THRU PARAPET
(East Bound Lanes)

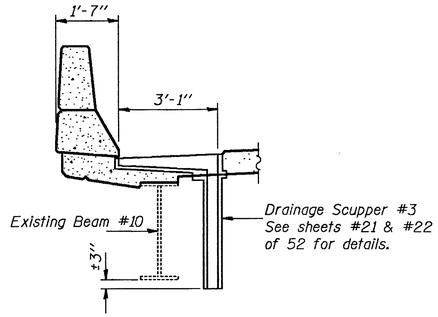

SECTION B-B

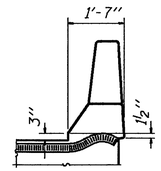

END OF SEAL TREATMENT

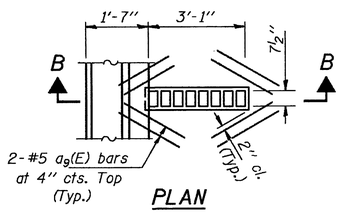

PLAN

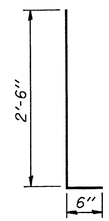

BARS d(E) & d2(E)

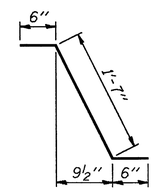

BAR d1(E)

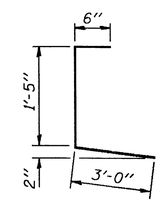

BAR d3(E)

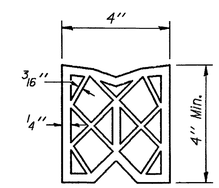

PREFORMED JOINT SEAL (4")

SUPERSTRUCTURE EAST BOUND LANES BILL OF MATERIAL

Bar	No.	Size	Length	Shape
a2(E)	416	#6	4'-6"	
a3(E)	1367	#5	8'-0"	
a9(E)	8	#5	2'-0"	
a10 (E)	678	#5	25'-5"	
a11 (E)	531	#5	19'-3"	
a12 (E)	4	#5	33'-6"	
a13 (E)	2	#5	27'-2"	
a14 (E)	2	#5	22'-4"	
a15 (E)	40	#5	31'-6"	
a16 (E)	29	#5	25'-6"	
a17 (E)	158	#6	19'-3"	
b(E)	417	#5	33'-8"	
b1 (E)	110	#6	38'-9"	
b2(E)	57	#6	39'-9"	
b3(E)	388	#5	29'-8"	
d(E)	492	#5	3'-0"	
d1 (E)	492	#5	2'-7"	
d2(E)	451	#4	3'-0"	
d3(E)	451	#4	4'-11"	
e3(E)	24	#4	9'-3"	
e7(E)	12	#4	18'-3"	
e11 (E)	8	#8	9'-3"	
e18 (E)	8	#5	9'-3"	
e19 (E)	48	#4	8'-3"	
e20(E)	36	#4	16'-3"	
e21 (E)	24	#4	18'-0"	
e22(E)	36	#4	16'-1"	
e23(E)	12	#4	17'-10"	
e24(E)	2	#8	36'-8"	
e25(E)	16	#8	8'-3"	
e26(E)	16	#8	26'-6"	
e27(E)	4	#8	36'-3"	
e30(E)	2	#8	36'-0"	
e31 (E)	16	#5	19'-3"	
e32(E)	16	#5	8'-3"	
e33(E)	16	#5	25'-7"	
Reinforcement Bars, Epoxy Coated			Lbs.	96,660
Class X Concrete Superstructure			Cu. Yd.	356.5

Reinforcement bars designated (E) shall be epoxy coated.

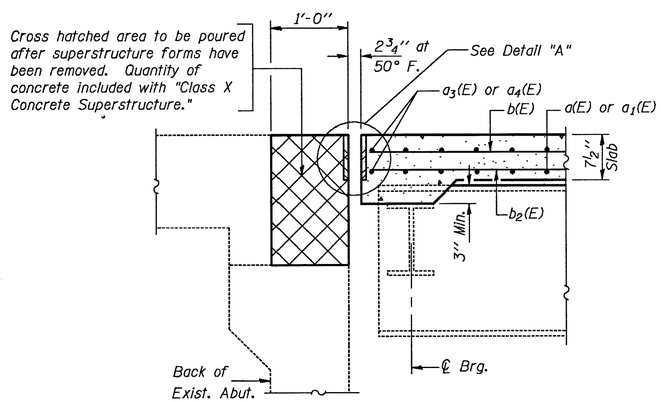

SECTION A-A
(Dimensions @ Rt. L's)

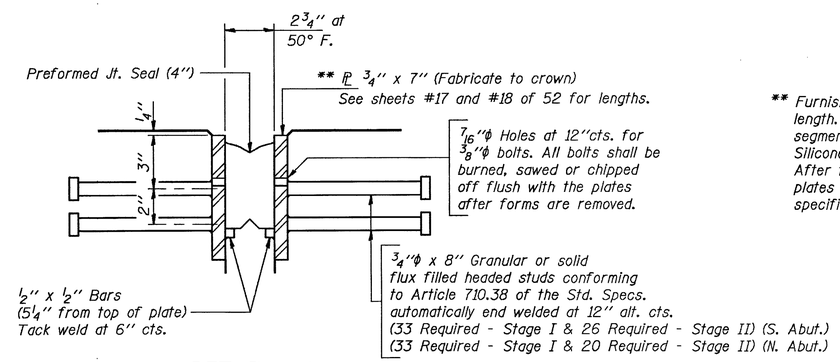

DETAIL "A"
(Dimensions are at Rt. L's)

** Furnish in segments of 25 ft. maximum length. Maximum space between installed segments shall be 3/16". Seal space with Silicone Sealant suitable for Structural Steel. After fabrication all surfaces of the steel plates shall be given one shop coat of paint specified for New Structural Steel.

DESIGNED	RTBoro
CHECKED	Sheila E. Magjuhan
DRAWN	R. Doty
CHECKED	RTB Sem

May 17 1990
EXAMINED Greg J. Kaspar — ENGINEER OF BRIDGE DESIGN
PASSED Ralph E. Anderson — ENGINEER OF BRIDGES AND STRUCTURES
APPROVED — DIRECTOR OF HIGHWAYS

SUPERSTRUCTURE DETAILS
EAST BOUND LANES
F.A.I. RT. 39 SEC. 5HBD
WINNEBAGO COUNTY
STA. 872+39.77

ROUTE NO.	SECTION	COUNTY	TOTAL SHEETS	SHEET NO.
U. S. I. F. A. I. 39	5HBD	WINNEBAGO	171	127
FED. ROAD DIST. NO. 7	ILLINOIS	FED. AID PROJECT-		

SHEET NO. 21
52 SHEETS

STATE OF ILLINOIS
DEPARTMENT OF TRANSPORTATION

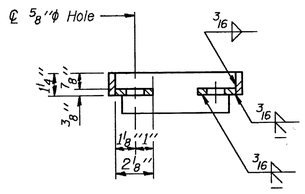

SECTION A-A

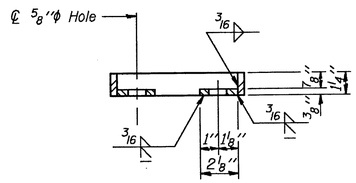

SECTION B-B

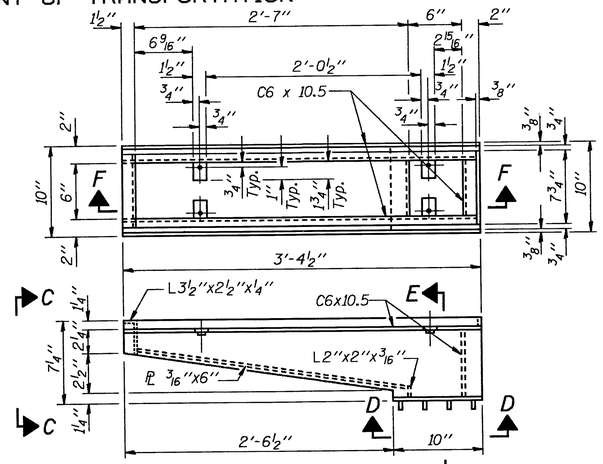

FRAME

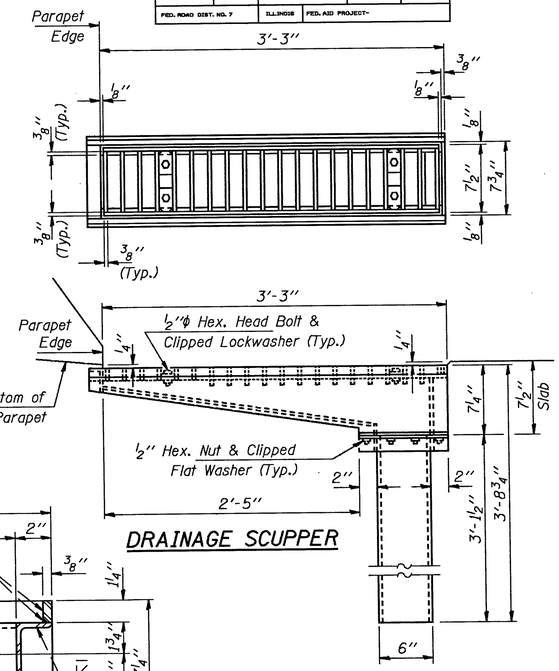

DRAINAGE SCUPPER

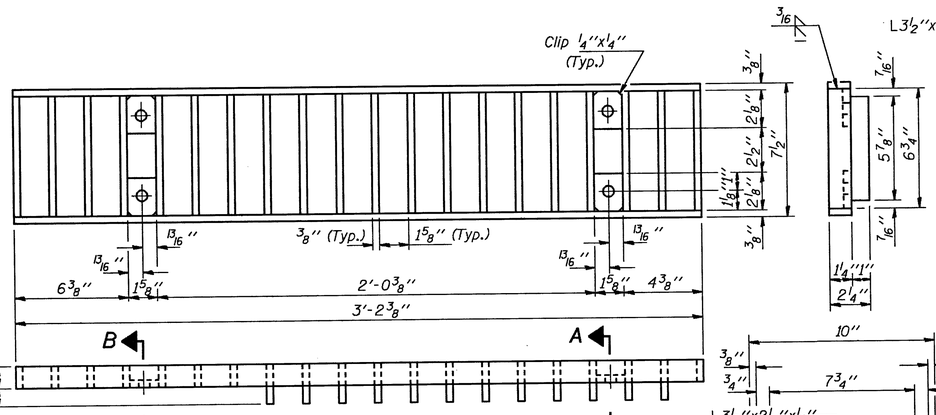

GRATE

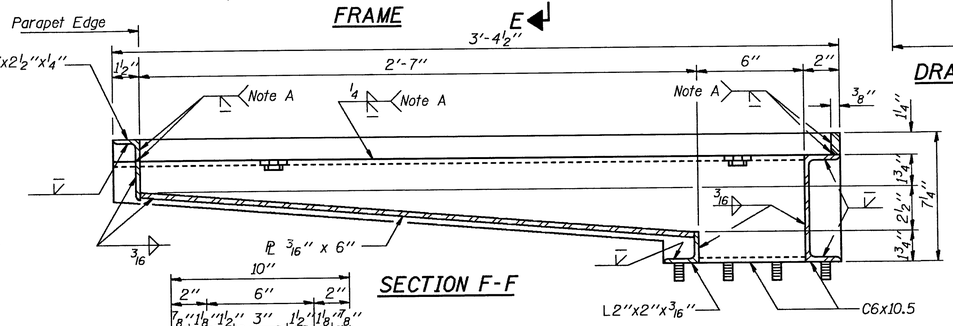

SECTION F-F

Note A: Surface of welds shall be recessed 1/16" Max. or placed flush with inside face of bars to provide clearance for Grate.

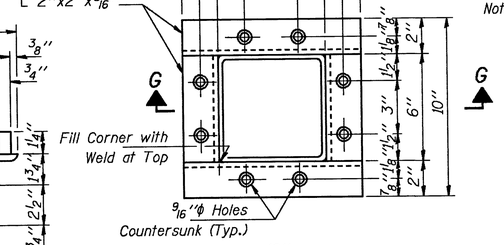

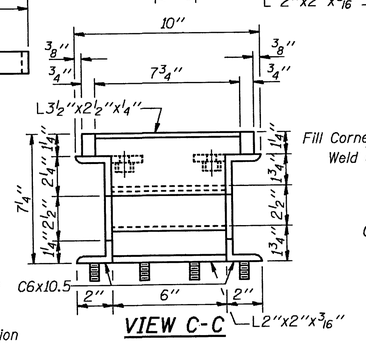

VIEW C-C

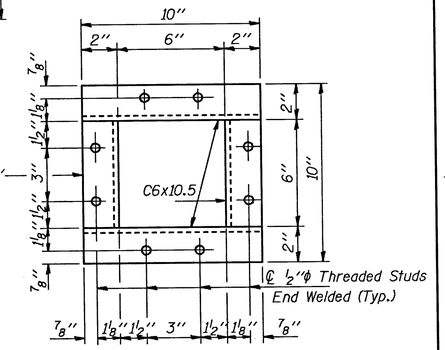

VIEW D-D

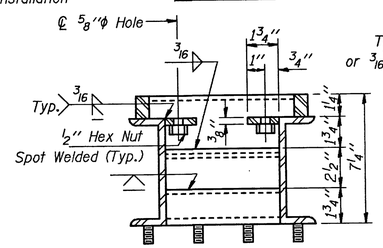

SECTION E-E

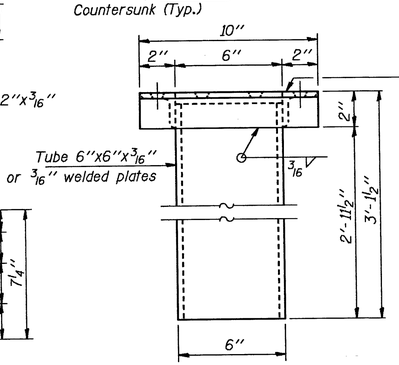

DOWNSPOUT

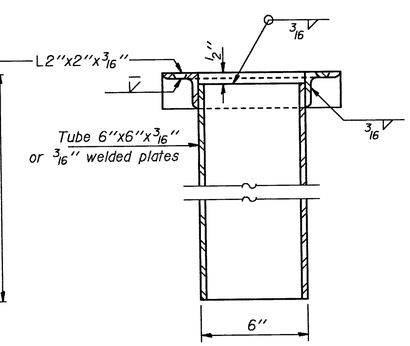

SECTION G-G

Notes: Hollow structural steel tubing shall conform to the requirements of ASTM designation A500 Grade B, or A501 Structural Steel Tubing.
All other shapes, plates and bars shall conform to the requirements of AASHTO M183.
Bolts, studs, washers and nuts shall conform to the requirements of ASTM A307.
The Grate, Frame and Downspout shall be galvanized after shop fabrication in accordance with AASHTO M111 & ASTM A385.
All bolts, washers and nuts shall be galvanized in accordance with AASHTO M232.
Cost of the Grate, Frame, Downspout, Bolts, Washers and Nuts including complete installation of Scupper will be paid for at the unit bid price for "DRAINAGE SCUPPERS."

BILL OF MATERIAL

ITEM	UNIT	QUANTITY
Drainage Scupper	Each	3

DESIGNED	RT Boro
CHECKED	Sheila E. Morgenhan
DRAWN	R. Doty
CHECKED	RTB SEM

May 17 1990
EXAMINED Raj J. Kaspar — ENGINEER OF BRIDGE DESIGN
PASSED Ralph E. Anderson — ENGINEER OF BRIDGES AND STRUCTURES
APPROVED — DIRECTOR OF HIGHWAYS

DS-3 12-1-83 (W.T. to inside of exterior stringer flange shall not be >3'-11")

(Sheet 1 of 2)

STEEL DRAINAGE SCUPPER
F.A.I. RT. 39 SEC. 5HBD
WINNEBAGO COUNTY
STA. 872+39.77

STATE OF ILLINOIS
DEPARTMENT OF TRANSPORTATION

ROUTE NO.	SECTION	COUNTY	TOTAL SHEETS	SHEET NO.
S. B. I. F. A. I. 39	5HBD	WINNEBAGO	171	128
FED. ROAD DIST. NO. 7	ILLINOIS	FED. AID PROJECT-		

SHEET NO. 22
52 SHEETS

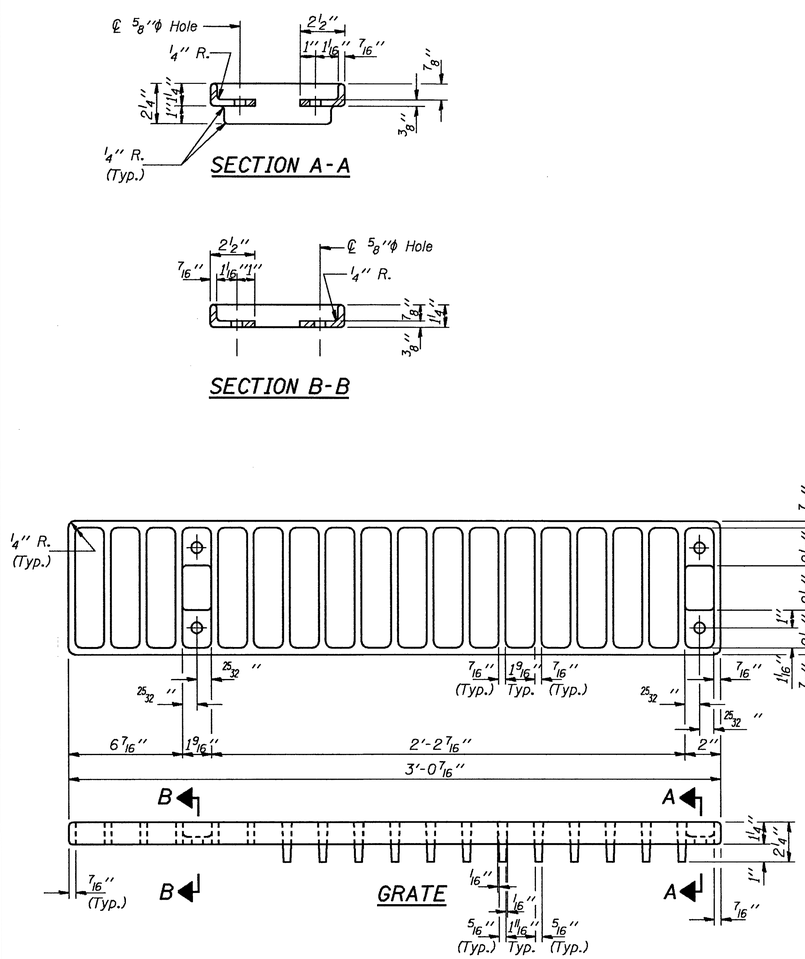

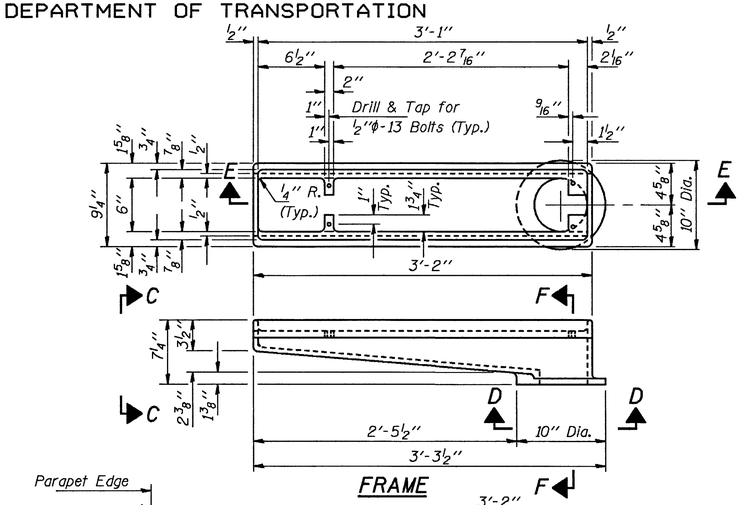

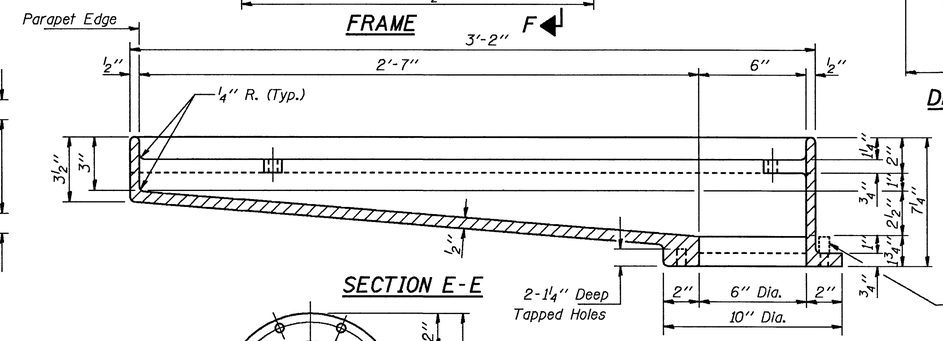

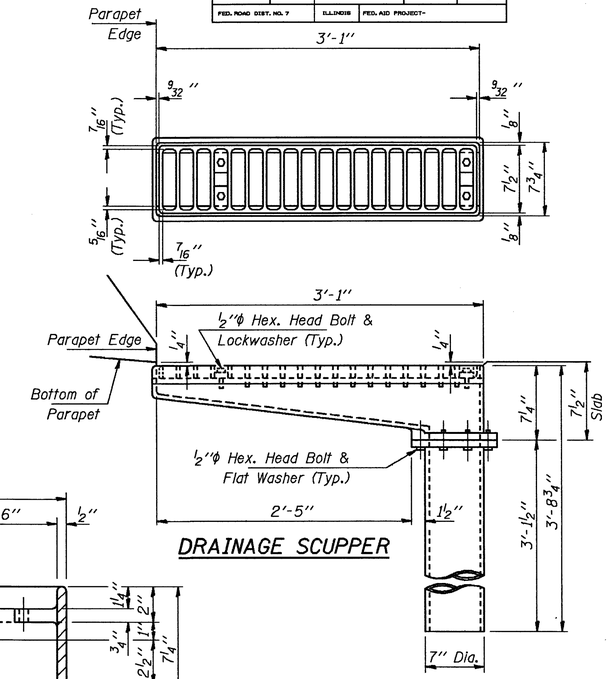

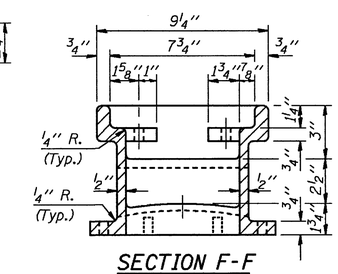

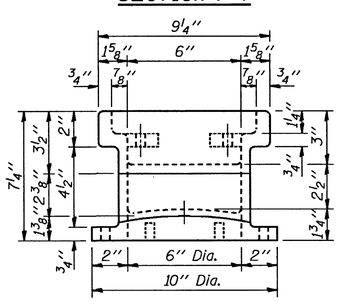

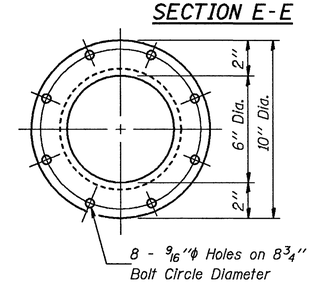

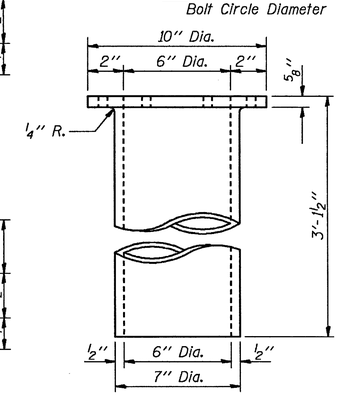

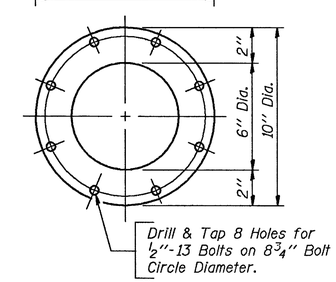

Notes: All cast iron parts shall be gray iron conforming to the requirements of AASHTO M105, Class 30.
Bolts and washers shall conform to the requirements of ASTM A307.
All bolts and washers shall be galvanized in accordance with AASHTO M232.
As an alternate bolts and washers may be stainless steel conforming to the requirements of ASTM A193, Type 304.
Cost of the Grate, Frame, Downspout, bolts and washers including complete installation of Scupper will be paid for at the unit bid price for "DRAINAGE SCUPPERS."
The Contractor may use at his option steel drainage scuppers or cast iron drainage scuppers.

DESIGNED	RTBozo
CHECKED	Sheila E. Margiotta
DRAWN	R. Doty
CHECKED	RTB sem

May 17 1990
EXAMINED Raj J. Kaspar — ENGINEER OF BRIDGE DESIGN
PASSED Ralph E. Anderson — ENGINEER OF BRIDGES AND STRUCTURES
APPROVED — DIRECTOR OF HIGHWAYS

DS-4 12-1-83 (W.T. to inside of exterior stringer flange shall not be >3'-11")

(Sheet 2 of 2)
ALTERNATE - CAST IRON
DRAINAGE SCUPPER
F.A.I. RT. 39 SEC. 5HBD
WINNEBAGO COUNTY
STA. 872+39.77

ROUTE NO.	SECTION	COUNTY	TOTAL SHEETS	SHEET NO.
S.B.I. F.A.I. 39	5HBD	WINNEBAGO	171	129
FED. ROAD DIST. NO. 7		ILLINOIS	FED. AID PROJECT-	

SHEET NO. 23
52 SHEETS

STATE OF ILLINOIS
DEPARTMENT OF TRANSPORTATION

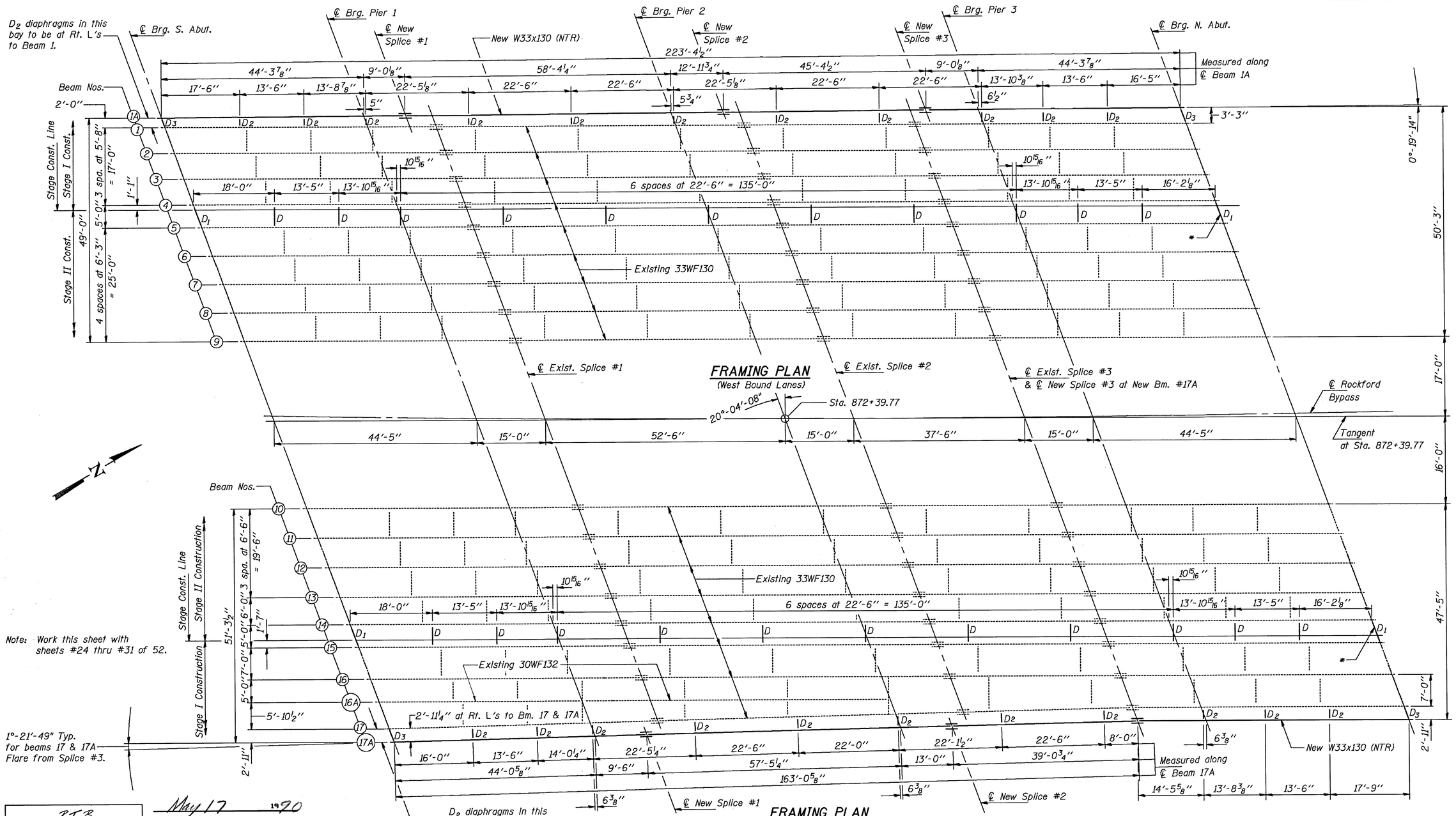

Note: Work this sheet with sheets #24 thru #31 of 52.

NTR denotes members to which Notch Toughness Requirements are applicable.

* Diaphragms D in these bays to be placed during Stage II Construction. Diaphragm D_1 in these bays to be spliced. See detail on sheet #29 of 52.

DESIGNED	RT Boro
CHECKED	Sheila E. Morgenhan
DRAWN	R. Doty
CHECKED	RTB SEM

May 17 1990

EXAMINED Raj S. Kaspar — ENGINEER OF BRIDGE DESIGN

PASSED Ralph E. Anderson — ENGINEER OF BRIDGES AND STRUCTURES

APPROVED — DIRECTOR OF HIGHWAYS

STRUCTURAL STEEL
F.A.I. RT. 39 SEC. 5HBD
WINNEBAGO COUNTY
STA. 872+39.77

STATE OF ILLINOIS
DEPARTMENT OF TRANSPORTATION

ROUTE NO.	SECTION	COUNTY	TOTAL SHEETS	SHEET NO.
S.B.I. F.A.I. 39	5HBD	WINNEBAGO	171	130
FED. ROAD DIST. NO. 7		ILLINOIS	FED. AID PROJECT-	

SHEET NO. 24
52 SHEETS

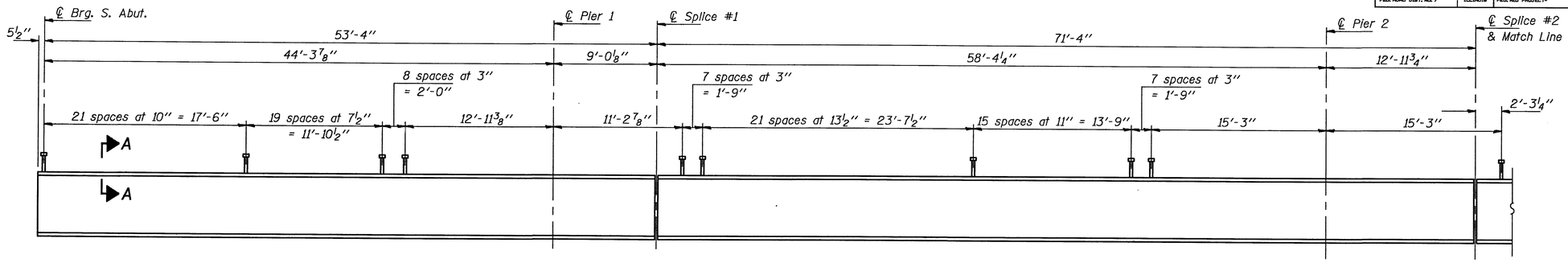

Note: For Section A-A see sheet #27 of 52.

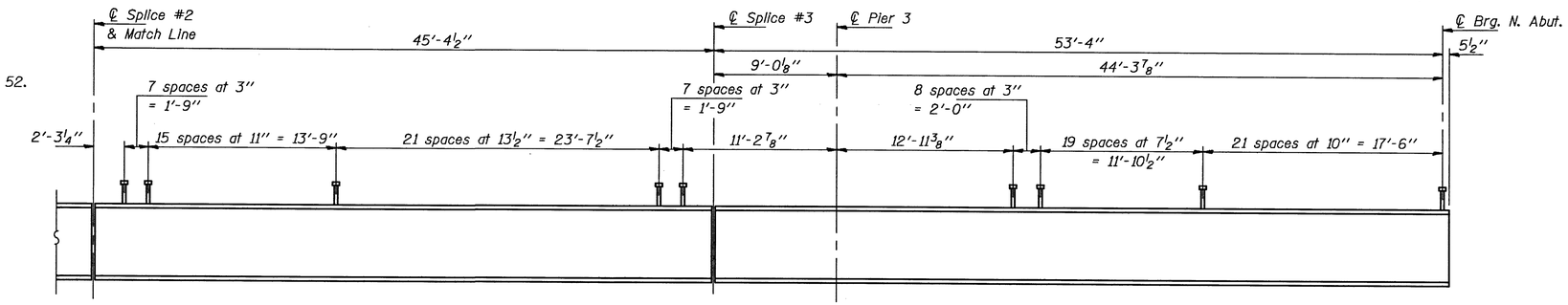

STUD SHEAR CONNECTOR SPACING
BEAM 1A

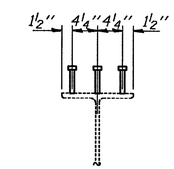

SECTION THRU BEAM
(Typ. except for Beam 16A)

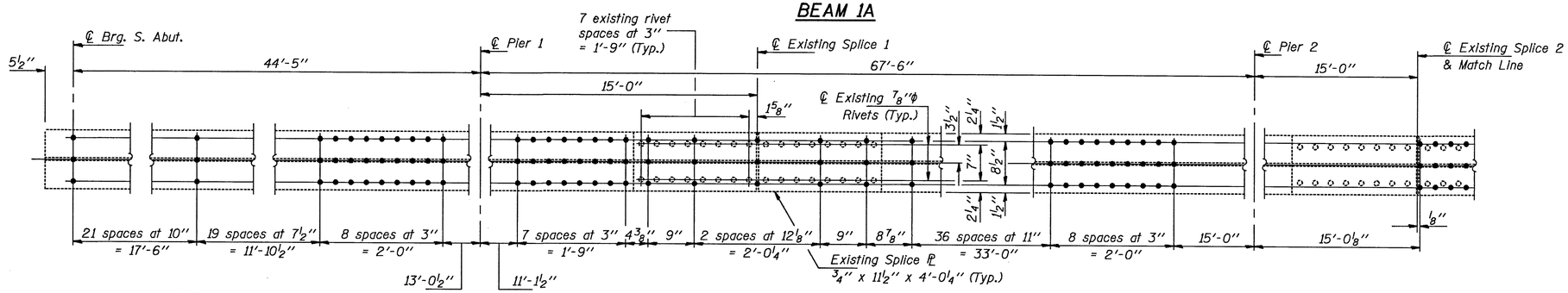

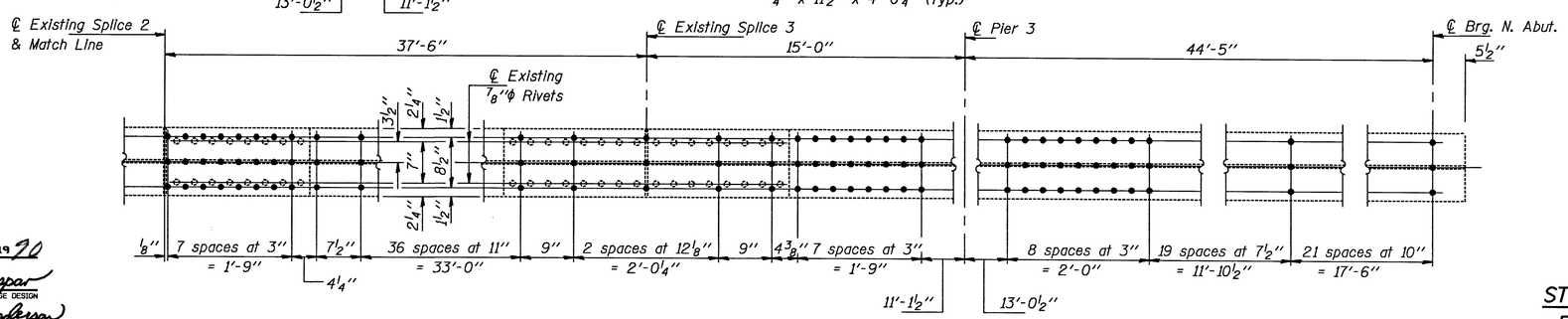

STUD SHEAR CONNECTOR SPACING
BEAMS 1, 2, 3 AND 4

DESIGNED	RTBoro
CHECKED	Sheila E. Moynihan
DRAWN	R. Doty
CHECKED	RTB SEM

May 17 1990

EXAMINED Craig D. Kaspar
ENGINEER OF BRIDGE DESIGN

PASSED Ralph E. Anderson
ENGINEER OF BRIDGES AND STRUCTURES

APPROVED
DIRECTOR OF HIGHWAYS

STRUCTURAL STEEL DETAILS
F.A.I. RT. 39 SEC. 5HBD
WINNEBAGO COUNTY
STA. 872+39.77

STATE OF ILLINOIS
DEPARTMENT OF TRANSPORTATION

ROUTE NO.	SECTION	COUNTY	TOTAL SHEETS	SHEET NO.
S.B.I. F.A.I. 39	5HBD	WINNEBAGO	171	131
FED. ROAD DIST. NO. 7		ILLINOIS	FED. AID PROJECT-	

SHEET NO. 25
52 SHEETS

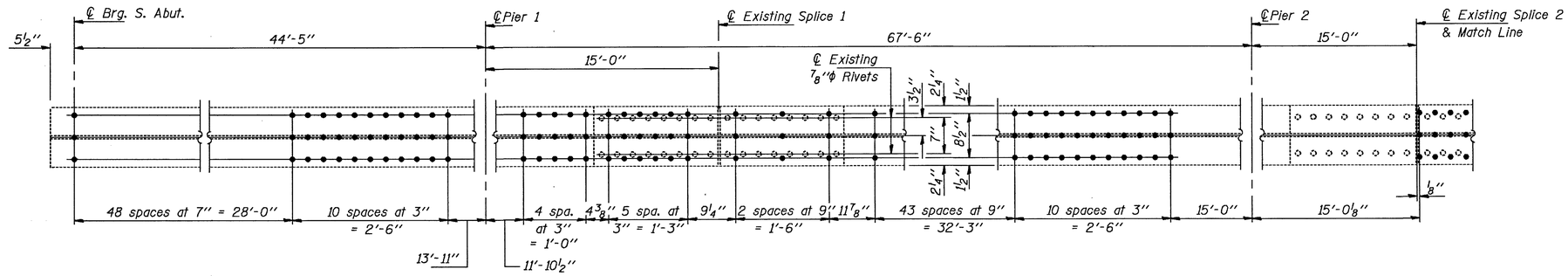

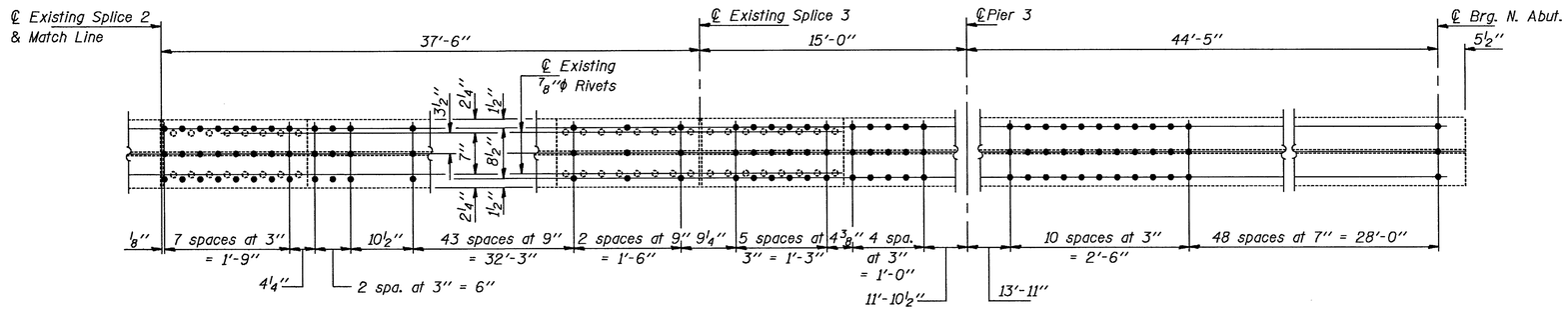

STUD SHEAR CONNECTOR SPACING
BEAMS 5 THRU 16

* 5½" cope in stringer at floor beam ends.

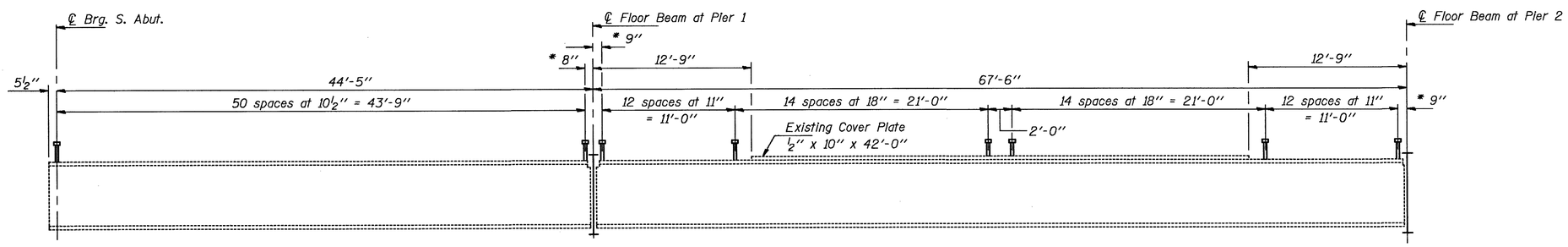

STUD SHEAR CONNECTOR SPACING
BEAM 16A

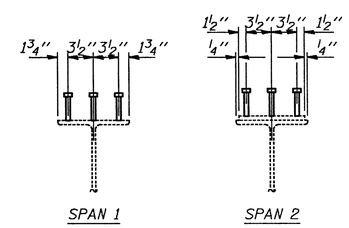

SECTION THRU BEAM 16A

DESIGNED	RTBoro
CHECKED	Sheila E. Moynihan
DRAWN	R. Doty
CHECKED	RTB SEM

May 17 1990
EXAMINED Jaj J. Kaspar — ENGINEER OF BRIDGE DESIGN
PASSED Ralph E. Anderson — ENGINEER OF BRIDGES AND STRUCTURES
APPROVED — DIRECTOR OF HIGHWAYS

Notes: See Section A-A on sheet #27 of 52.
See Section Thru Beam on sheet #24 of 52.

STRUCTURAL STEEL DETAILS
F.A.I. RT. 39 SEC. 5HBD
WINNEBAGO COUNTY
STA. 872+39.77

STATE OF ILLINOIS
DEPARTMENT OF TRANSPORTATION

ROUTE NO.	SECTION	COUNTY	TOTAL SHEETS	SHEET NO.
S.B.I. F.A.I. 39	5HBD	WINNEBAGO	171	132
FED. ROAD DIST. NO. 7	ILLINOIS	FED. AID PROJECT-		

SHEET NO. 26
52 SHEETS

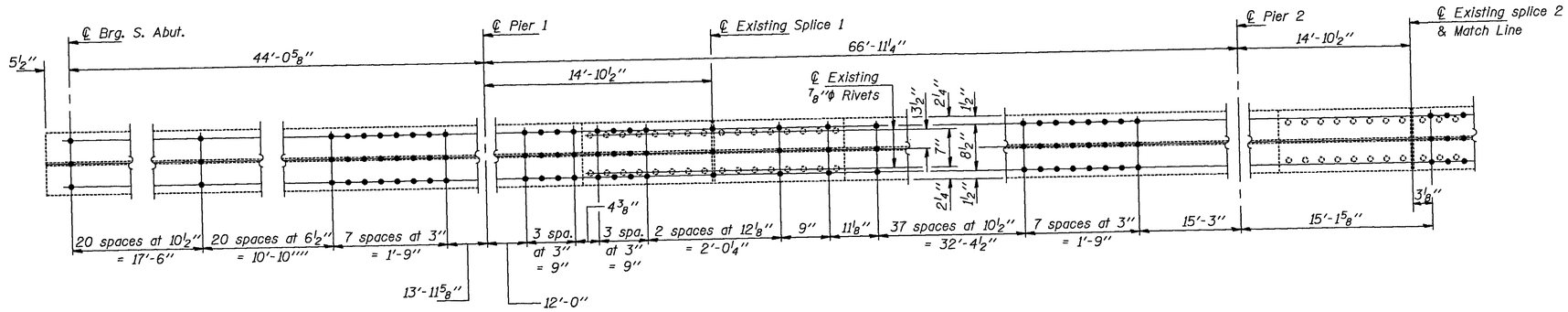

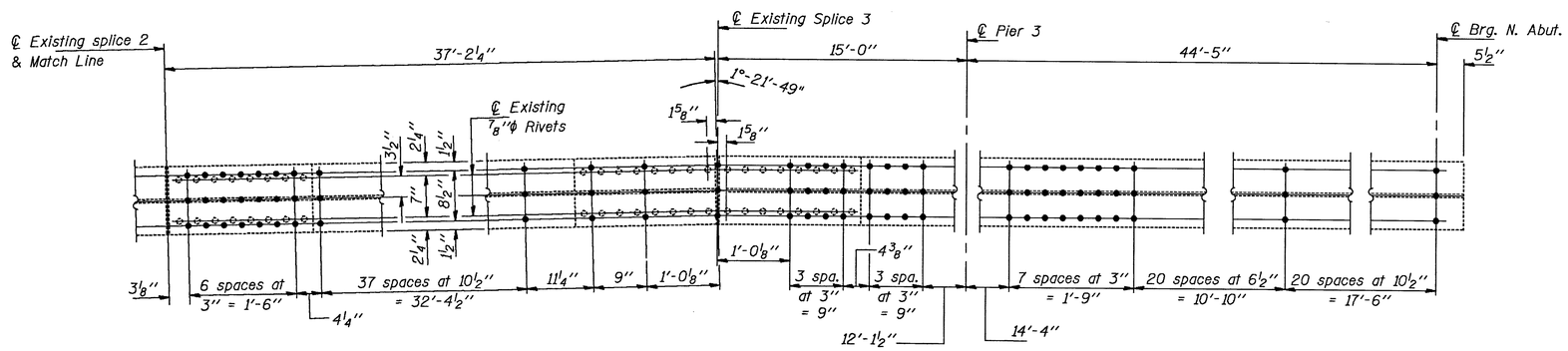

STUD SHEAR CONNECTOR SPACING
BEAM 17
(Dimensions are along ℄ Beam 17)

DESIGNED	RTBoro
CHECKED	Shirley E. Moynihan
DRAWN	R. Doty
CHECKED	RTB SEM

May 17 1990
EXAMINED Greg D. Kasper — ENGINEER OF BRIDGE DESIGN
PASSED Ralph E. Anderson — ENGINEER OF BRIDGES AND STRUCTURES
APPROVED — DIRECTOR OF HIGHWAYS

Notes: See Section A-A on sheet #27 of 52.
See Section Thru Beam on sheet #24 of 52.

STRUCTURAL STEEL DETAILS
F.A.I. RT. 39 SEC. 5HBD
WINNEBAGO COUNTY
STA. 872+39.77

STATE OF ILLINOIS
DEPARTMENT OF TRANSPORTATION

ROUTE NO.	SECTION	COUNTY	TOTAL SHEETS	SHEET NO.
S.B.I. F.A.I. 39	5HBD	WINNEBAGO	171	133
FED. ROAD DIST. NO. 7	ILLINOIS	FED. AID PROJECT-		

SHEET NO. 27
52 SHEETS

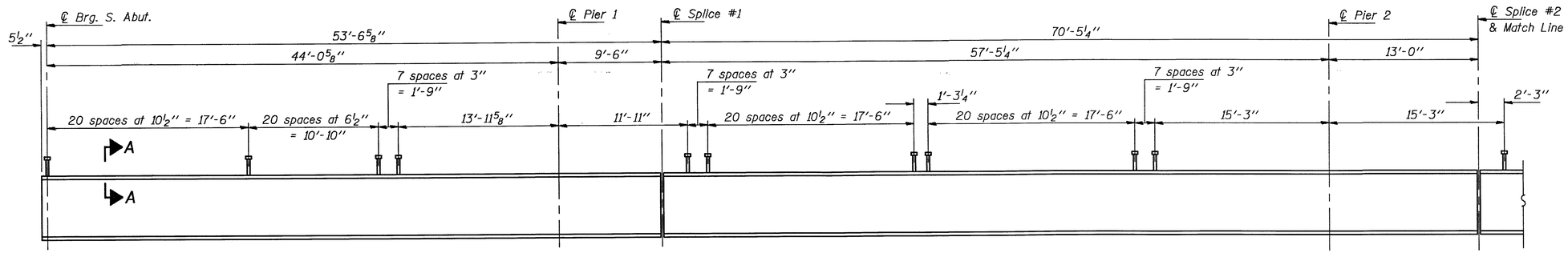

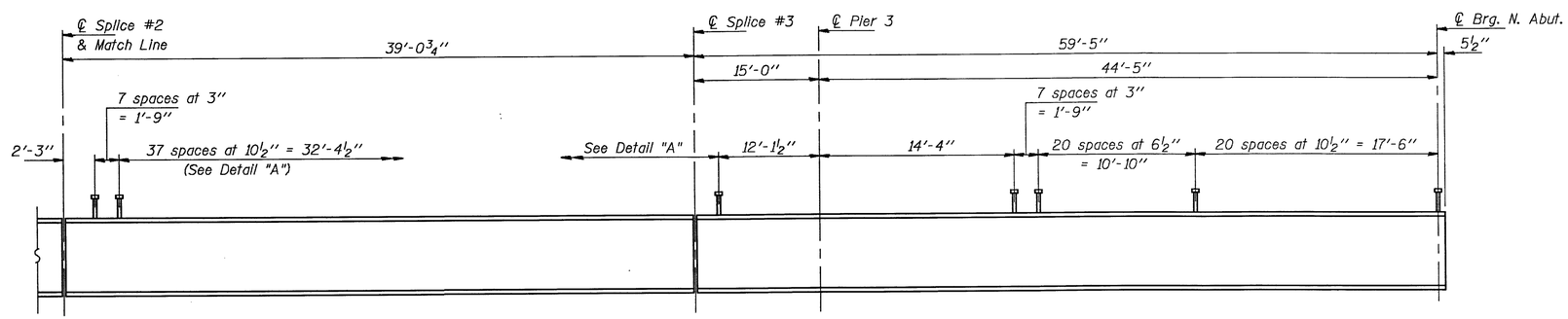

SHEAR STUD TABLE

Beam No.	* No.
1A	600
1 Thru 4	642
5 Thru 16	762
16A	315
17 & 17A	624

* No. Required per Beam.

STUD SHEAR CONNECTOR SPACING
BEAM 17A
(Dimensions are along ℄ Beam 17A)

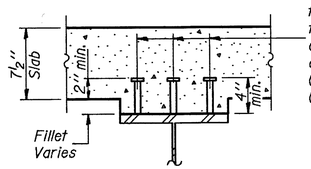

¾"ϕ Granular or solid flux filled headed studs, conforming to the requirements of Art. 710.38 of the Standard Spec's. automatically end welded to flange. (Total No. Required = 13875) (See Shear Stud Table).

SECTION A-A

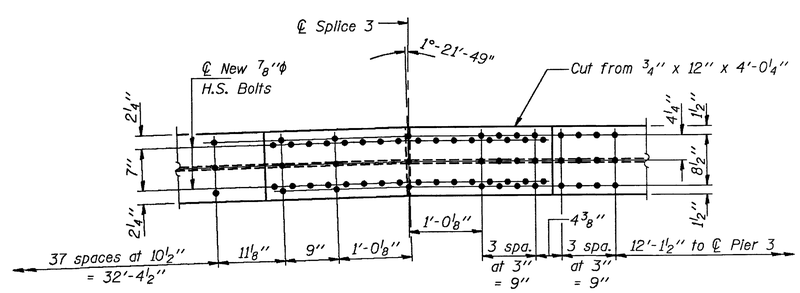

DETAIL "A"

Note: See Section Thru Beam on sheet #24 of 52.

DESIGNED	R T Boro
CHECKED	Sheila E. Moyneihan
DRAWN	R. Doty
CHECKED	RTB SEM

May 17 1990

EXAMINED Jaj. J. Kaspar
ENGINEER OF BRIDGE DESIGN

PASSED Ralph E. Anderson
ENGINEER OF BRIDGES AND STRUCTURES

APPROVED
DIRECTOR OF HIGHWAYS

STRUCTURAL STEEL DETAILS
F.A.I. RT. 39 SEC. 5HBD
WINNEBAGO COUNTY
STA. 872+39.77

STATE OF ILLINOIS
DEPARTMENT OF TRANSPORTATION

ROUTE NO.	SECTION	COUNTY	TOTAL SHEETS	SHEET NO.
S. B. I. F. A. I. 39	5HBD	WINNEBAGO	171	134
FED. ROAD DIST. NO. 7	ILLINOIS	FED. AID PROJECT-		

SHEET NO. 28
52 SHEETS

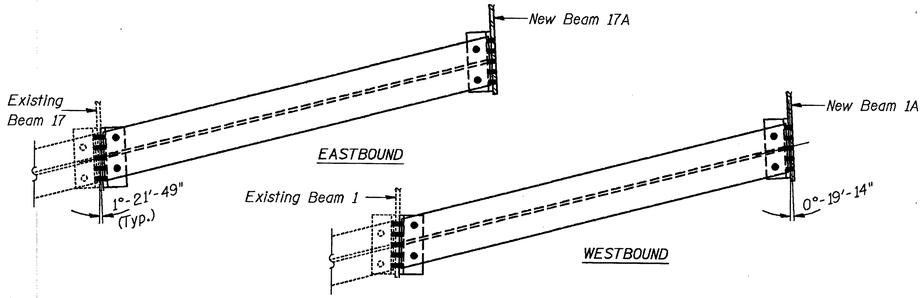

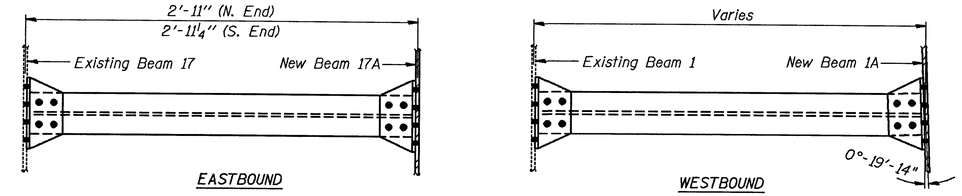

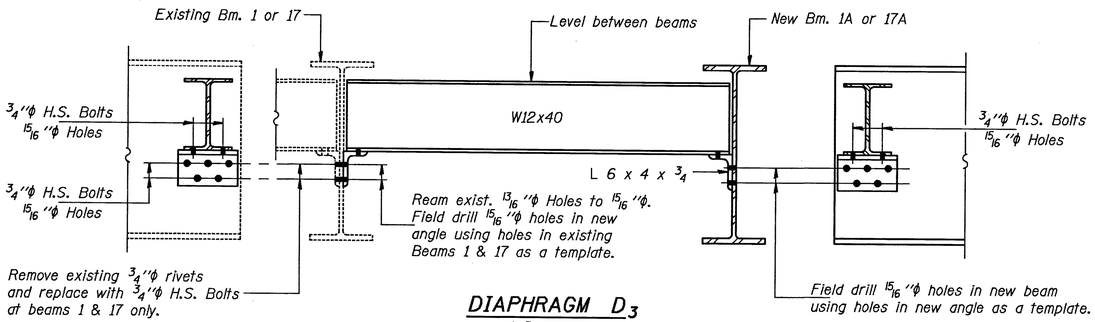

DIAPHRAGM D_3

4 Required

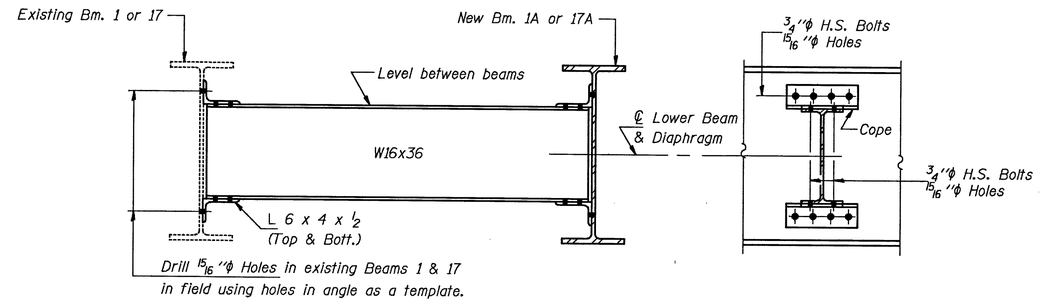

DIAPHRAGM D_2

22 Required

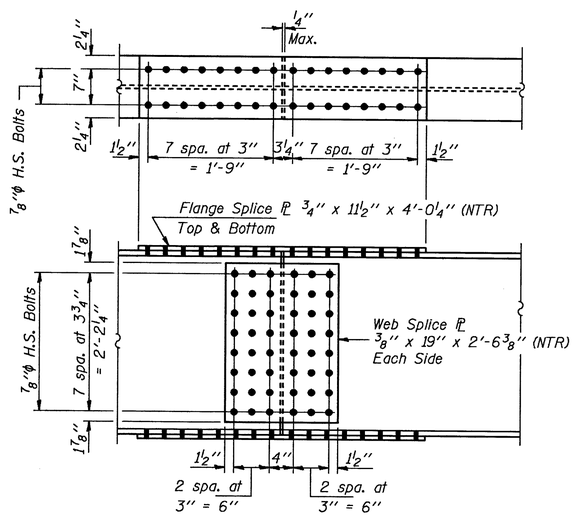

SPLICE

(5 Required)

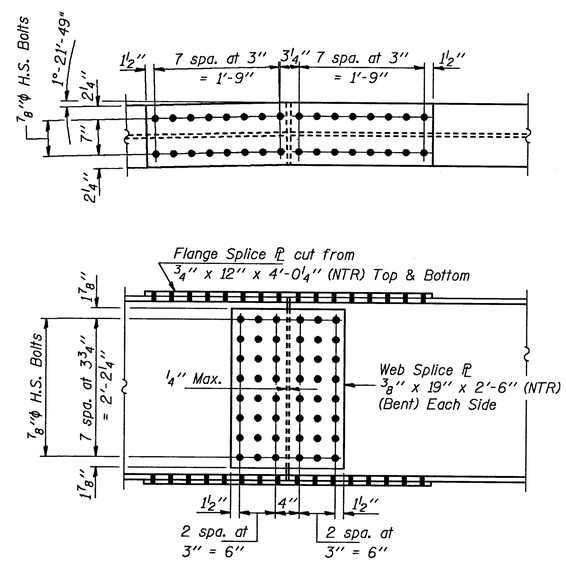

SPLICE

(Splice #3 - Beam 17A only)
(1 Required)

TOP OF BEAM ELEVATIONS

Beam No.	℄ Brg. S. Abut.	℄ Brg. Pier 1	℄ Splice #1	℄ Brg. Pier 2	℄ Splice #2	℄ Splice #3	℄ Brg. Pier 3	℄ Brg. N. Abut.
* 1A	796.81	797.33	797.43	798.05	798.19	798.59	798.66	799.02
1	796.83	797.31	—	798.05	—	—	798.66	799.06
2	796.97	797.45	—	798.19	—	—	798.79	799.19
3	797.11	797.59	—	798.32	—	—	798.92	799.32
4	797.17	797.68	—	798.37	—	—	799.00	799.37
5	797.26	797.77	—	798.47	—	—	799.10	799.46
6	797.44	797.94	—	798.64	—	—	799.26	799.62
7	797.53	798.03	—	798.72	—	—	799.34	799.69
8	797.62	798.12	—	798.81	—	—	799.42	799.77
9	797.71	798.21	—	798.89	—	—	799.50	799.85
10	797.55	798.04	—	798.69	—	—	799.28	799.62
11	797.65	798.13	—	798.78	—	—	799.36	799.70
12	797.74	798.22	—	798.87	—	—	799.45	799.78
13	797.83	798.31	—	798.95	—	—	799.53	799.86
14	797.84	798.31	—	798.95	—	—	799.52	799.85
15	797.82	798.30	—	798.94	—	—	799.50	799.80
16	797.79	798.27	—	798.90	—	—	799.45	799.75
16A	797.62	798.11	—	798.77	—	—	—	—
17	797.62	798.11	—	798.77	—	—	799.33	799.63
* 17A	797.68	798.13	798.23	798.78	798.91	799.23	799.34	799.68

* New Beams 1A & 17A are given for fabrication only.
All others are for information only (Existing top of beam to be raised ±4"-final elevation shown).

Notes: Two hardened washers shall be required over all 15/16"φ holes.
Cost of field drilling holes and removing existing rivets is incidental to "Structural Steel."
NTR denotes members to which Notch Toughness Requirements are applicable.

DESIGNED	RT Boro
CHECKED	Sheila E. Morgenhan
DRAWN	R. Doty
CHECKED	RTB SEM TJW

May 17 1990
EXAMINED Greg. D. Kaspar — ENGINEER OF BRIDGE DESIGN
PASSED Ralph E. Anderson — ENGINEER OF BRIDGES AND STRUCTURES
APPROVED — DIRECTOR OF HIGHWAYS

STRUCTURAL STEEL DETAILS
F.A.I. RT. 39 SEC. 5HBD
WINNEBAGO COUNTY
STA. 872+39.77

STATE OF ILLINOIS
DEPARTMENT OF TRANSPORTATION

ROUTE NO.	SECTION	COUNTY	TOTAL SHEETS	SHEET NO.
S.B.I. F.A.I. 39	5HBD	WINNEBAGO	171	135
FED. ROAD DIST. NO. 7		ILLINOIS	FED. AID PROJECT-	

SHEET NO. 29
52 SHEETS

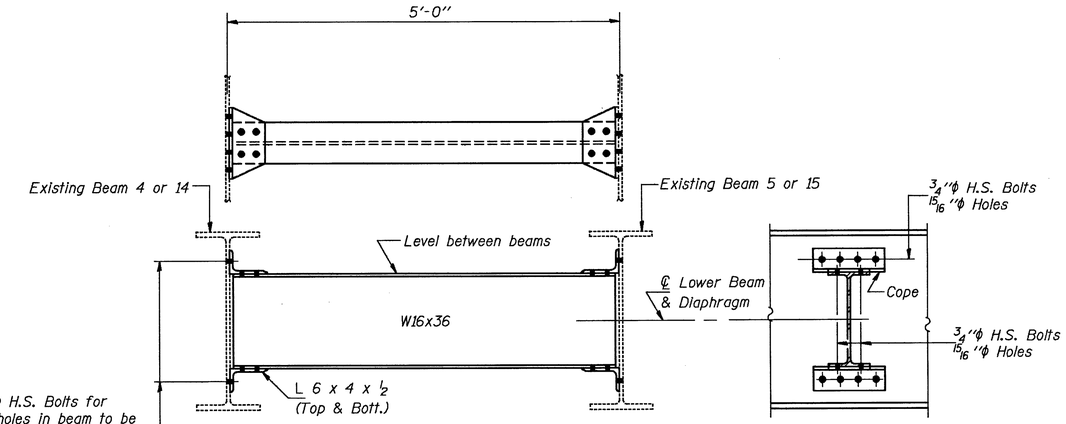

DIAPHRAGM D
22 Required

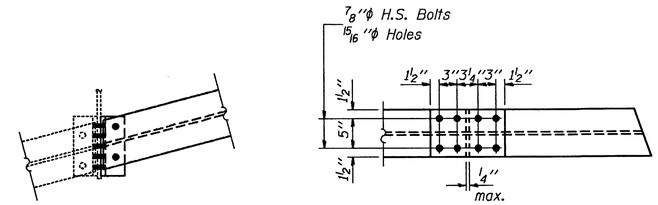

VIEW A-A

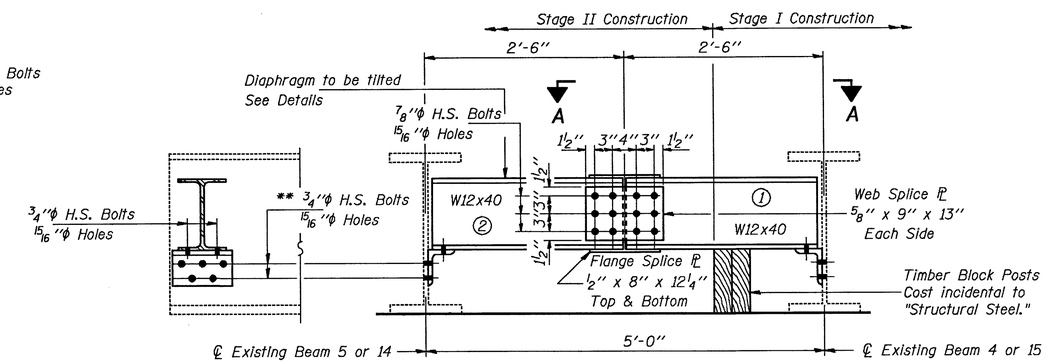

DIAPHRAGM D_1 SPLICE
4 Required
(W.B.L. Looking South - E.B.L. Looking North)
For details of connections to beams see diaphragm D_1.
Dimensions are at Rt. L's to beams.

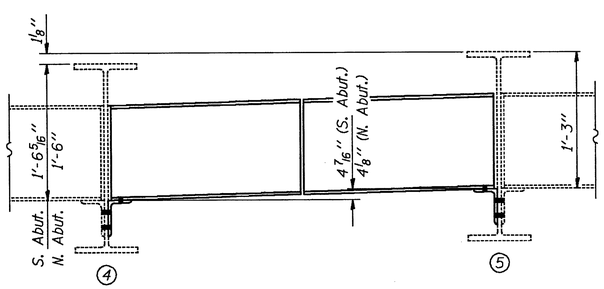

DIAPHRAGM D_1
(Looking North)

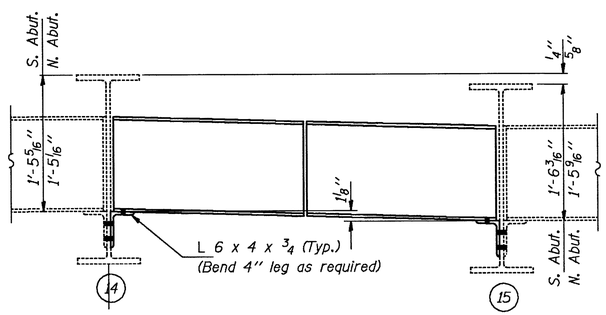

DIAPHRAGM D_1
(Looking North)

DIAPHRAGM D_1 CONSTRUCTION SEQUENCE

1.) Order Diaphragm D_1 in two sections.
2.) Attach section ① of Diaphragm to Beam 4 or 15 during Stage I Construction.
3.) Place Timber Block Posts between section ① of diaphragm and abutment bearing seat.
4.) Attach section ② of diaphragm to both Beams 5 or 14 and section ① of diaphragm during Stage II Construction.
5.) Attach all splice plates to sections ① and ② of diaphragms.
6.) Remove Timber Block Posts.

Notes: Two hardened washers shall be required over all 15/16"ϕ holes.
Cost of field drilling holes and removing existing rivets is incidental to "Structural Steel."

** Remove existing ¾"ϕ rivets and replace with ¾"ϕ H.S. Bolts. Ream existing 13/16"ϕ Holes to 15/16"ϕ. Field drill 15/16"ϕ Holes in new angle using holes in existing beams as a template.

DESIGNED	R T Boro
CHECKED	Sheila E. Moynihan
DRAWN	R. Doty
CHECKED	RTB SEM

May 17 1990
EXAMINED Raj I. Kaspar — ENGINEER OF BRIDGE DESIGN
PASSED Ralph E. Anderson — ENGINEER OF BRIDGES AND STRUCTURES
APPROVED — DIRECTOR OF HIGHWAYS

STRUCTURAL STEEL DETAILS
F.A.I. RT. 39 SEC. 5HBD
WINNEBAGO COUNTY
STA. 872+39.77

STATE OF ILLINOIS
DEPARTMENT OF TRANSPORTATION

INTERIOR BEAM MOMENT TABLE

	New Beam 1A				Existing Beam 1				Existing Beams 2, 3 and 4				Existing Beams 5 Thru 9				Existing Beams 10 Thru 14			
	0.4 Span 1 or 0.6 Span 4	Pier 1 or Pier 3	0.5 Span 2 or Span 3	Pier 2	0.4 Span 1 or 0.6 Span 4	Pier 1 or Pier 3	0.5 Span 2 or Span 3	Pier 2	0.4 Span 1 or 0.6 Span 4	Pier 1 or Pier 3	0.5 Span 2 or Span 3	Pier 2	0.4 Span 1 or 0.6 Span 4	Pier 1 or Pier 3	0.5 Span 2 or Span 3	Pier 2	0.4 Span 1 or 0.6 Span 4	Pier 1 or Pier 3	0.5 Span 2 or Span 3	Pier 2
Is (in4)	6710	6710	6710	6710	6710	6710	6710	8915	6710	6710	6710	8915	6710	8915	6710	8915	6710	8915	6710	9672
Ic (in4)	15947	—	15947	—	15947	—	15947	—	16858	—	16858	—	17272	—	17272	—	17436	—	17436	—
Ss (in3)	406	406	406	406	406	406	406	527	406	406	406	527	406	527	406	527	406	527	406	567
Sc (in3)	572	—	572	—	572	—	572	—	582	—	582	—	587	—	587	—	589	—	589	—
wℓ (K/ft.)	.591	.788	.591	.788	.591	.788	.591	.822	.693	.917	.693	.951	.748	1.018	.748	1.018	.771	1.058	.771	1.068
Mℓ ('K)	66.3	233.7	116.8	331.4	66.3	233.7	116.8	331.4	77.7	271.3	136.7	384.6	77.8	314.4	143.7	403.8	80.8	325.1	146.6	425.1
sℓ (K/ft.)	.197	—	.197	—	.197	—	.197	—	.224	—	.224	—	.238	—	.238	—	.254	—	.254	—
Msℓ ('K)	26.8	—	51.4	—	26.8	—	51.4	—	30.8	—	59.4	—	30.8	—	61.8	—	32.9	—	66.0	—
Mℓ ('K)	187.0	137.3	272.1	178.0	187.0	137.3	272.1	178.0	231.4	166.7	338.8	216.8	252.4	198.5	368.0	234.9	262.6	205.6	382.1	249.1
M (Imp) ('K)	55.2	37.9	70.7	46.3	55.2	37.9	70.7	46.3	68.2	46.2	88.1	56.4	74.4	55.0	95.7	61.1	77.5	57.0	99.3	64.8
$\frac{5}{3}$(Mℓ+I) ('K)	403.7	292.0	571.3	373.8	403.7	292.0	571.3	373.8	499.3	354.8	711.5	455.3	544.7	422.5	772.8	493.3	566.8	437.7	802.3	523.2
Ma ('K)	646	683	961	917	646	683	961	917	790	814	1180	1092	849	958	1272	1166	885	992	1319	1233
Mu ('K)	2384	—	2384	—	2219	—	2219	—	2285	—	2285	—	2313	—	2313	—	2323	—	2323	—
fsℓ non-comp (k.s.i.)	2.0	6.9	3.5	9.8	2.0	6.9	3.5	7.5	2.3	8.0	4.0	8.8	2.3	7.2	4.2	9.2	2.4	7.4	4.3	9.0
fsℓ (comp) (k.s.i.)	0.7	—	1.2	—	0.7	—	1.2	—	0.7	—	1.3	—	0.7	—	1.4	—	0.8	—	1.4	—
fs$\frac{5}{3}$(ℓ+I) (k.s.i.)	8.5	8.6	12.0	11.0	8.5	8.6	12.0	8.5	10.3	10.5	14.7	10.4	11.1	9.6	15.8	11.2	11.5	10.0	16.3	11.1
fs (Overload) (k.s.i.)	11.1	15.5	16.6	20.8	11.1	15.5	16.6	16.0	13.3	18.5	20.1	19.2	14.1	16.8	21.4	20.4	14.7	17.4	22	20.1
fs (Total) (k.s.i.)	—	20.2	—	27.1	—	20.2	—	20.9	—	24.1	—	24.9	—	21.8	—	26.6	—	22.5	—	26.1
VR (K)	33.3	—	29.9	—	33.3	—	29.9	—	41.1	—	36.9	—	45.7	—	40.4	—	47.5	—	42.2	—

INTERIOR BEAM MOMENT TABLE

	Existing Beams 15 and 16				Existing Beam 16A		Existing Beam 17				New Beam 17A			
	0.4 Span 1 or 0.6 Span 4	Pier 1 or Pier 3	0.5 Span 2 or Span 3	Pier 2	0.5 Span 1	0.5 Span 2	0.4 Span 1 or 0.6 Span 4	Pier 1 or Pier 3	0.5 Span 2 or Span 3	Pier 2	0.4 Span 1 or 0.6 Span 4	Pier 1 or Pier 3	0.5 Span 2 or Span 3	Pier 2
Is (in4)	6710	8915	6710	9672	5770	8143	6710	8915	6710	9672	6710	6710	6710	6710
Ic (in4)	17743	—	17743	—	14564	18599	16287	—	16287	—	16287	—	16287	—
Ss (in3)	406	527	406	567	380	520	406	527	406	567	406	406	406	406
Sc (in3)	592	—	592	—	550	712	576	—	576	—	576	—	576	—
wℓ (K/ft.)	.818	1.116	.818	1.127	.678	.719	.626	.874	.626	.885	.626	.626	.626	.626
Mℓ ('K)	85.7	343.5	155.4	449.4	167.2	409.5	66.4	265.6	117.7	344.6	66.4	265.6	117.7	344.6
sℓ (K/ft.)	.266	—	.266	—	.218	.218	.215	—	.215	—	.215	—	.215	—
Msℓ ('K)	34.6	—	69.4	—	53.8	124.2	27.7	—	54.2	—	27.7	—	54.2	—
Mℓ ('K)	282.8	220.3	412.2	267.0	261.0	464.8	200.0	158.7	286.3	191.3	200.0	158.7	286.3	191.3
M (Imp) ('K)	83.4	61.0	107.2	69.4	77.0	120.8	59.0	43.9	74.4	49.7	59.0	43.9	74.4	49.7
$\frac{5}{3}$(Mℓ+I) ('K)	610.3	468.8	865.7	560.7	563.3	976.0	431.7	337.7	601.2	401.7	431.7	337.7	601.2	401.7
Ma ('K)	950	1056	1418	1313	1020	1963	683	784	1005	970	683	784	1005	970
Mu ('K)	2341	—	2341	—	2152	2677	2243	—	2243	—	2415	—	2415	—
fsℓ non-comp (k.s.i.)	2.5	7.8	4.6	9.5	5.3	9.5	2.0	6.0	3.5	7.3	2.0	7.9	3.5	10.2
fsℓ (comp) (k.s.i.)	0.8	—	1.5	—	1.3	2.3	0.6	—	1.3	—	0.6	—	1.2	—
fs$\frac{5}{3}$(ℓ+I) (k.s.i.)	12.4	10.7	17.5	11.9	12.3	16.4	9.0	7.7	12.5	8.5	9.0	10.0	12.5	11.9
fs (Overload) (k.s.i.)	15.7	18.5	23.6	21.4	18.9	28.2	11.6	13.7	17.3	15.8	11.6	17.9	17.3	22.1
fs (Total) (k.s.i.)	—	24.0	—	27.8	—	—	—	17.9	—	20.5	—	23.2	—	28.7
VR (K)	51.1	—	45.3	—	36.4	38.6	36.3	—	32.2	—	36.3	—	32.2	—

Is and Ss are the moment of Inertia and section modulus of the steel section used in computing fs (Total & Overload).

Ic and Sc are the moment of Inertia and section modulus of the composite section used in computing fs (Overload).

VR is the maximum Live Load + Impact shear range in span.

Ma (Applied Moment)=1.3[Mℓ + Msℓ + $\frac{5}{3}$(Mℓ + I)].

Mu is the Full Plastic Moment Capacity computed according to AASHTO 10.48.1 & 10.50.1.1.

fs (Overload) is the sum of the stresses due to Mℓ + Msℓ + $\frac{5}{3}$(Mℓ + I).

fs (Total) is the sum of the stresses due to 1.3[Mℓ + Msℓ + $\frac{5}{3}$(Mℓ + I)].

INTERIOR BEAM REACTION TABLE

	New Beam 1A & Existing Beam 1			Existing Beams 2, 3 and 4			Existing Beams 5 Thru 9			Existing Beams 10 Thru 14		
	Abuts.	Pier 1 or 3	Pier 2	Abuts.	Pier 1 or 3	Pier 2	Abuts.	Pier 1 or 3	Pier 2	Abuts.	Pier 1 or 3	Pier 2
Rℓ (K)	12.3	48.0	56.3	14.2	55.8	65.5	15.0	61.2	69.6	15.4	63.5	72.4
Rℓ (K)	22.9	28.4	30.8	28.3	35.0	38.0	31.1	38.9	41.7	32.3	40.5	43.5
Imp. (K)	6.8	7.9	8.0	8.4	9.7	9.9	9.2	10.8	10.8	9.5	11.2	11.3
R (Total) (K)	42.0	84.3	95.1	50.9	100.5	113.4	55.3	110.9	122.1	57.2	115.2	127.2

	Existing Beam 15			Exist. Bm. 16A	Existing Beam 17			New Beam 17A		
	Abuts.	Pier 1 or 3	Pier 2	S. Abut.	Abuts.	Pier 1 or 3	Pier 2	Abuts.	Pier 1 or 3	Pier 2
Rℓ (K)	16.3	67.2	76.5	19.9	12.8	77.8	74.8	12.8	52.0	59.0
Rℓ (K)	34.8	43.6	46.8	28.1	24.6	60.3	48.4	24.6	30.9	33.1
Imp. (K)	10.3	12.1	12.2	8.3	7.3	16.8	12.6	7.3	8.6	8.6
R (Total) (K)	61.4	122.9	135.5	56.3	44.7	154.9	135.8	44.7	91.5	100.7

Existing Beam 16		
16.3	93.0	92.3
34.8	73.0	62.1
10.3	20.3	16.2
61.4	186.3	170.6

DESIGNED RTBoro
CHECKED Shirle E. Morgenthaler
DRAWN R. Doty
CHECKED RTB SEM TJW

May 17 1990
EXAMINED Jaj. J. Kaspar
ENGINEER OF BRIDGE DESIGN
PASSED Ralph E. Anderson
ENGINEER OF BRIDGES AND STRUCTURES
APPROVED
DIRECTOR OF HIGHWAYS

STRUCTURAL STEEL DETAILS
F.A.I. RT. 39 SEC. 5HBD
WINNEBAGO COUNTY
STA. 872+39.77

ROUTE NO.	SECTION	COUNTY	TOTAL SHEETS	SHEET NO.
U. S. I. F. A. I. 39	5HBD	WINNEBAGO	171	137
FED. ROAD DIST. NO. 7		ILLINOIS	FED. AID PROJECT-	

SHEET NO. 31
52 SHEETS

STATE OF ILLINOIS
DEPARTMENT OF TRANSPORTATION

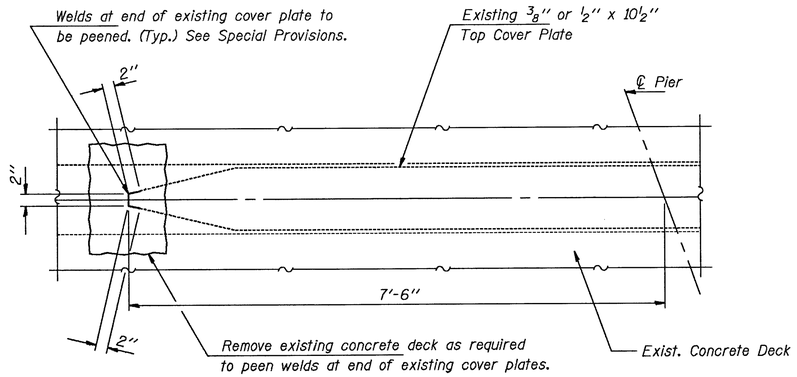

PEENING DETAILS

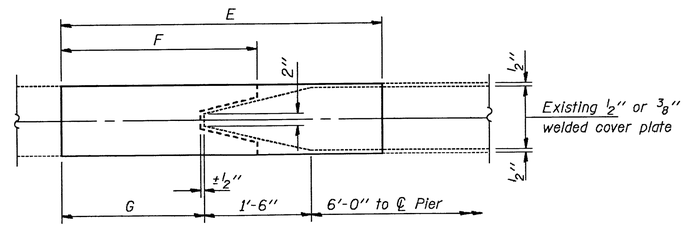

END OF EXISTING TOP COVER PLATE

Use new cover plate as a template to field drill 15/16"ϕ holes in top of existing beams. Cost incidental to "Structural Steel."

COVER PLATE THICKNESS t

Location	Bms. 1 Thru 4	Bms. 5 Thru 9	Bms. 10 Thru 14	Bms. 15 & 16	Beam 17
Pier 1 (Span 1) & Pier 3 (Span 4)	———	7/8"	1"	1 1/8"	1/2"
Pier 1 (Span 2) & Pier 3 (Span 3)	———	1/2"	1/2"	1/2"	———
Pier 2 (Spans 2 & 3)	1/2"	5/8"	3/4"	7/8"	1/2"

FILL PLATE THICKNESS

Location	Bms. 1 Thru 4	Bms. 5 Thru 9	Bms. 10 Thru 14	Bms. 15 & 16	Beam 17
Pier 1 (Span 1) & Pier 3 (Span 4)	———	3/8"	3/8"	3/8"	3/8"
Pier 1 (Span 2) & Pier 3 (Span 3)	———	3/8"	3/8"	3/8"	———
Pier 2 (Spans 2 & 3)	3/8"	3/8"	1/2"	1/2"	1/2"

PEENING LOCATIONS

Beams 1, 2, 3 & 4 - Pier 2 (Spans 2 & 3)
Beams 5 Thru 17 - Pier 1 (Spans 1 & 2)
Beams 5 Thru 17 - Pier 2 (Spans 2 & 3)
Beams 5 Thru 17 - Pier 3 (Spans 3 & 4)
No Peening Required on Beam 16A

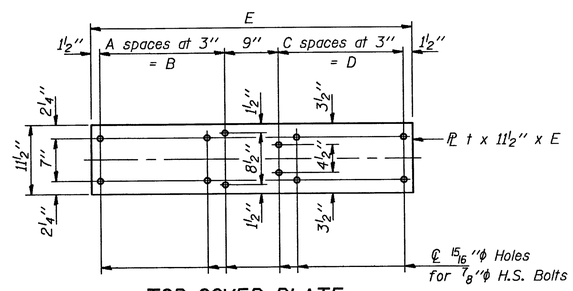

TOP COVER PLATE

TABLE OF DIMENSIONS

t	A	B	C	D	E	F	G
1/2"	6	18"	2	6"	3'-0"	2'-0"	1'-2 1/2"
5/8"	7	21"	3	9"	3'-6"	2'-3"	1'-5 1/2"
3/4"	8	24"	4	12"	4'-0"	2'-6"	1'-8 1/2"
7/8"	9	27"	5	15"	4'-6"	2'-9"	1'-11 1/2"
1"	10	30"	6	18"	5'-0"	3'-0"	2'-2 1/2"
1 1/8"	12	36"	8	24"	6'-0"	3'-6"	2'-8 1/2"

Notes: Peen welds for existing cover plates on top flanges only.
Peen welds for existing beams #1 thru #4 and #15 thru #17 before Stage I Removal.
Peen welds for existing beams #5 thru #14 before Stage II Removal.
Cost to peen welds shall be incidental to "Structural Steel."
Cover plate repairs shall be done for top flanges only.
Cover plate repairs shall be done for existing beams #1 thru #4 and #15 thru #17 after Stage I Removal. Cover plate repairs shall be done for existing beams #5 thru #14 after Stage II Removal.

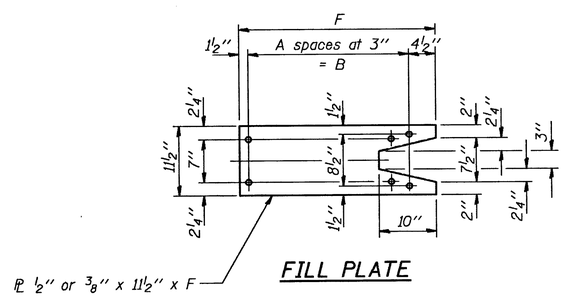

FILL PLATE

DESIGNED	R T Boro
CHECKED	Sheila E. Moynihan
DRAWN	R. Doty
CHECKED	RTB SEM

May 17 1990

EXAMINED Roger D. Kaspar
ENGINEER OF BRIDGE DESIGN

PASSED Ralph E. Anderson
ENGINEER OF BRIDGES AND STRUCTURES

APPROVED
DIRECTOR OF HIGHWAYS

COVER PLATE REPAIR DETAILS
F.A.I. RT. 39 SEC. 5HBD
WINNEBAGO COUNTY
STA. 872+39.77

STATE OF ILLINOIS
DEPARTMENT OF TRANSPORTATION

ROUTE NO.	SECTION	COUNTY	TOTAL SHEETS	SHEET NO.
S.B.I. F.A.I. 39	5HBD	WINNEBAGO	171	138
FED. ROAD DIST. NO. 7		ILLINOIS	FED. AID PROJECT-	

SHEET NO. 32
52 SHEETS

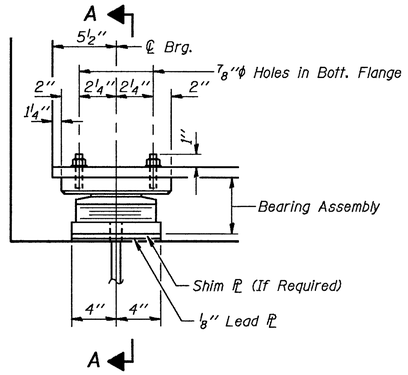

ELEVATION AT ABUT.
(New Beam)

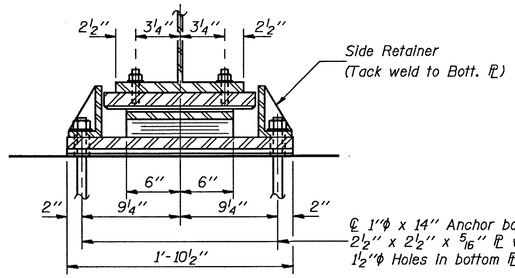

SECTION A-A

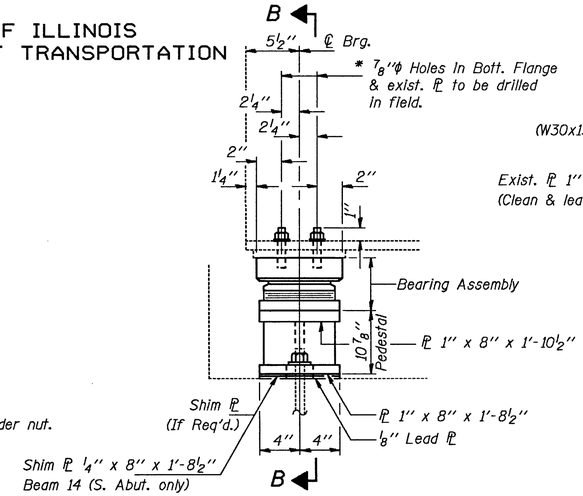

ELEVATION AT ABUT.
(Existing Beams)

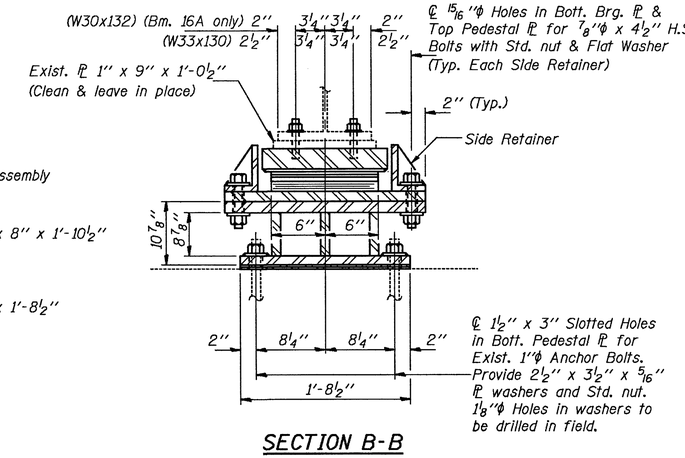

SECTION B-B

TYPE II TFE ELASTOMERIC EXP. BRG.

Note: The ⅛" TFE sheet shall be bonded directly to the top steel plate with a two-component, medium viscosity epoxy resin, conforming to the requirements of the Federal Specification MMM-A-134, Type I. The bond agent shall be applied on the full area of the contact surfaces. Bonding of ⅛" TFE sheet during vulcanizing process will be permitted provided the process and method of adjusting assembly height is approved by the Engineer.

* Cost of drilling holes in bottom flanges and existing plate in field is incidental to "Elastomeric Bearing Assembly, Type II."

Notes: For anchor bolt installation details see sheet #34 of 52.
For jacking existing structure details see sheet #52 of 52.

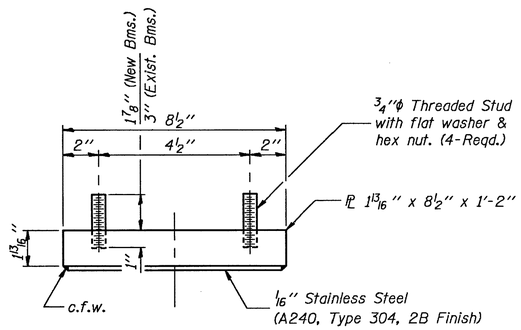

TOP BEARING ASSEMBLY

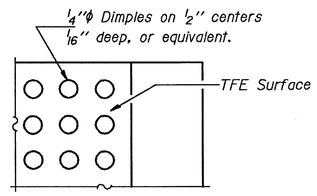

PLAN-TFE SURFACE

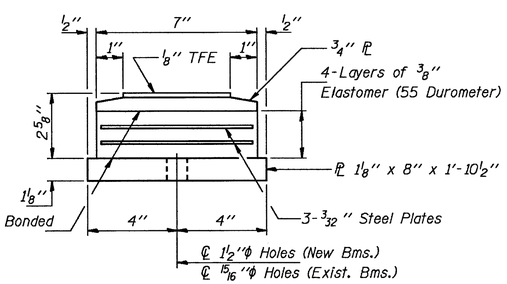

BOTTOM BEARING ASSEMBLY

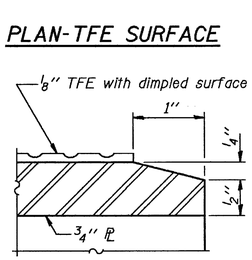

SECTION THRU TFE

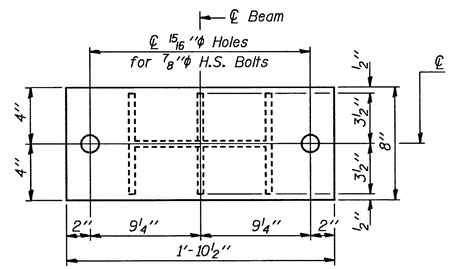

TOP PLATE

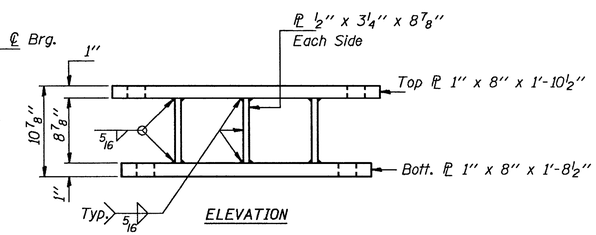

ELEVATION

PEDESTAL
(35 Required)
Equivalent built up section will be allowed in lieu of rolled section.

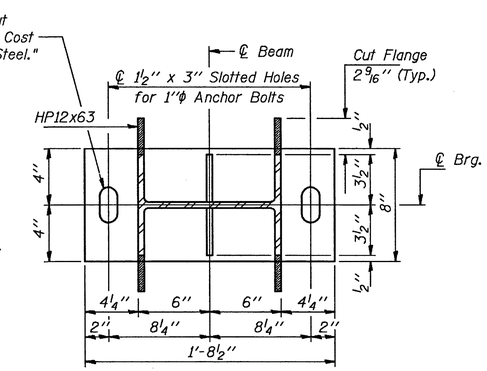

BOTTOM PLATE

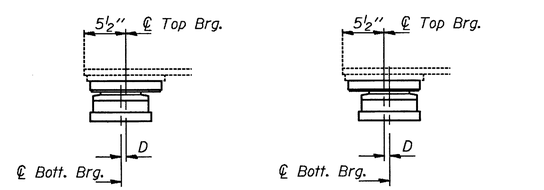

BELOW 50° F.
(Move bott. brg. away from fixed brg.)

ABOVE 50° F.
(Move bott. brg. toward fixed brg.)

SETTING PEDESTAL AT EXP. BRG.
D=⅛" per each 100' of expansion for every 15° temp. change from the normal temp. of 50° F.

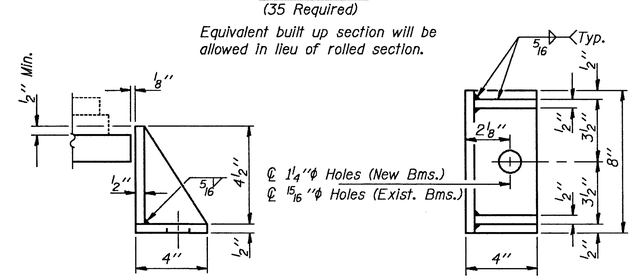

SIDE RETAINER
(78 Required)
Equivalent rolled angle with stiffeners will be allowed in lieu of welded plates.

BILL OF MATERIAL

Item	Unit	Total
Elastomeric Bearing Assembly, Type II	Each	39

DESIGNED	R T Boro
CHECKED	Shiela E. Morgulan
DRAWN	R. Doty
CHECKED	R T B Sem

May 17 1990
EXAMINED Greg J. Laspar — ENGINEER OF BRIDGE DESIGN
PASSED Ralph E. Anderson — ENGINEER OF BRIDGES AND STRUCTURES
APPROVED — DIRECTOR OF HIGHWAYS

I-2-E2 12-1-83

BEARING DETAILS
F.A.I. RT. 39 SEC. 5HBD
WINNEBAGO COUNTY
STA. 872+39.77

ROUTE NO.	SECTION	COUNTY	TOTAL SHEETS	SHEET NO.
S.B.I. F.A.I. 39	5HBD	WINNEBAGO	171	139
FED. ROAD DIST. NO. 7		ILLINOIS	FED. AID PROJECT-	

SHEET NO. 33
52 SHEETS

STATE OF ILLINOIS
DEPARTMENT OF TRANSPORTATION

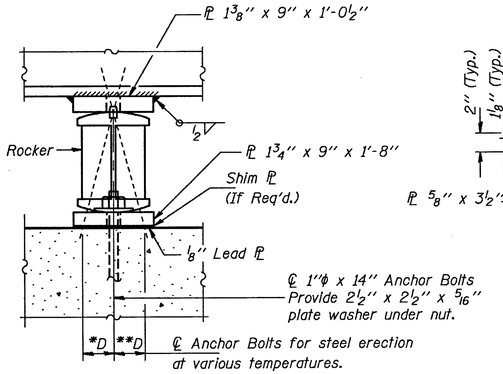

ELEVATION AT PIERS 1 & 3
(New Beams)
(4 Required)

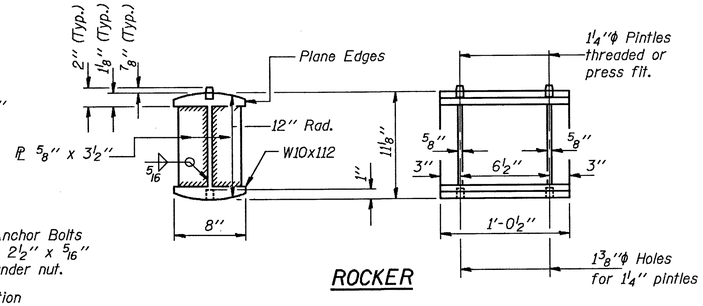

ROCKER

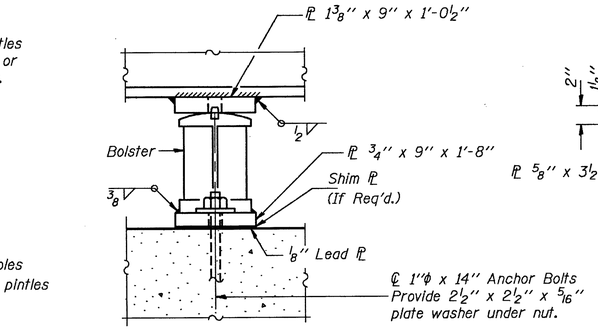

ELEVATION AT PIER 2
(New Beams)
(2 Required)

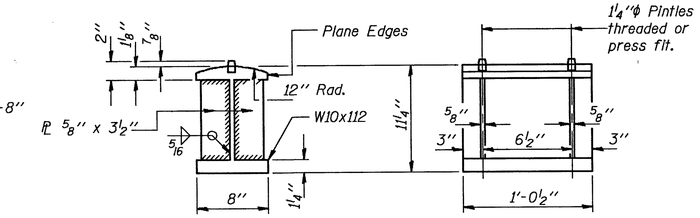

BOLSTER

Note: For jacking existing structure details see sheet #52 of 52.
Replace all existing adjusting shims with new 1/8" shim PL's provided.

Location	PL Size
Pier 1	1/8" x 9" x 1'-7"
Pier 2	1/8" x 9" x 1'-7"
Pier 3	3/8" x 9" x 1'-7"

REQUIRED SHIM PL'S
(Beam 14 Only)

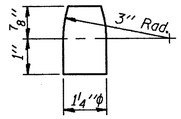

PINTLE

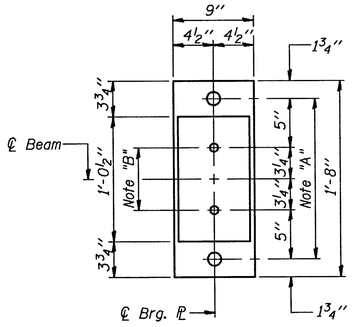

PLAN
AT PIERS 1 & 3
(New Beams)

NOTES FOR SETTING OF ANCHOR BOLTS
AT EXPANSION BEARINGS

a.) D* (Side of brg. away from fixed brg.)
D* = 1/8" per each 100' of expansion for every 15° fall below the normal temp. of 50° F.

D** (Side of brg. toward fixed brg.)
D** = 1/8" per each 100' of expansion for every 15° rise above the normal temp. of 50° F.

b.) After girders have been erected and dimensions D* & D** determined, holes shall be drilled and anchor bolts shall be installed as shown on sheet #34 of 52. All new fixed anchor bolts may be built into the masonry.

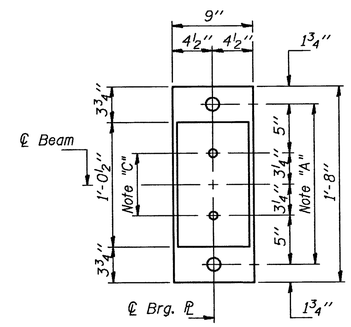

PLAN
AT PIER 2
(New Beams)

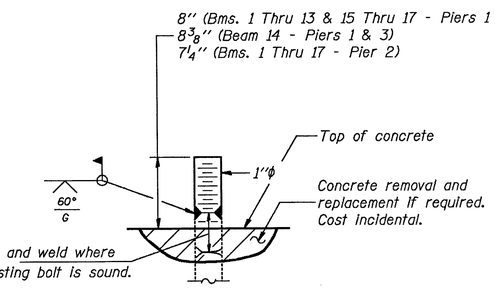

ANCHOR BOLT EXTENSION DETAIL

The furnishing and installation of required Anchor Bolt Extensions shall be paid for at the contract unit price each for "Anchor Bolt Extension."

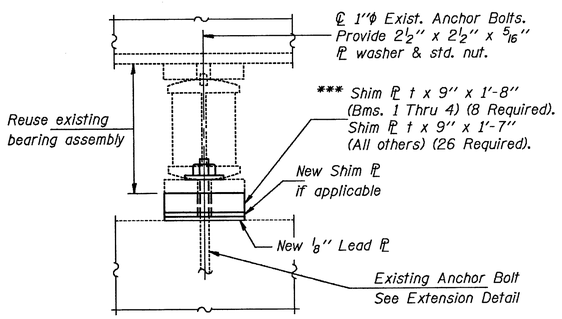

ELEVATION AT PIERS 1 & 3
(Existing Beams)

Note "A"
1 1/2"φ Holes for 1"φ Anchor Bolts-5/16" x 2 1/2" x 2 1/2" PL washer under nut.

Note "B"
1 3/8"φ Holes-1" deep in top PL for 1 1/4"φ Pintles. Thread or press fit pintles into bottom PL.

Note "C"
1 3/8"φ Holes-1" deep in top PL only for 1 1/4"φ Pintles.

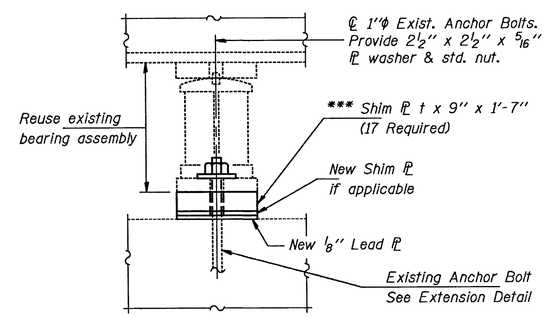

ELEVATION AT PIER 2
(Existing Beams)

*** Total thickness of shim plates, t = 4".
1 1/2"φ Holes for existing 1"φ anchor bolts shall have 1 3/4" edge distance (Typ.)

BILL OF MATERIAL

Item	Unit	Total
Remove and Reinstall Bearings	Each	51
Anchor Bolt Extension	Each	102

DESIGNED	R T Boro
CHECKED	Sheila E Mojahar
DRAWN	R. Doty
CHECKED	RTB SPM

May 17 1990
EXAMINED Graj J. Kaspar
ENGINEER OF BRIDGE DESIGN
PASSED Ralph E. Anderson
ENGINEER OF BRIDGES AND STRUCTURES
APPROVED
DIRECTOR OF HIGHWAYS

BEARING DETAILS
F.A.I. RT. 39 SEC. 5HBD
WINNEBAGO COUNTY
STA. 872+39.77

The Illinois Coil-Lock Anchor Bolt is a proprietary item which is the property of the Illinois Department of Transportation. Use, reproduction or disclosure without express written permission is prohibited and protected under Federal copyright laws. The production and the fabrication of this bolt for use on highway projects in the State of Illinois shall be permitted and there shall be no incurred charges or fees to the manufacturer or the fabricator for producing or fabricating this bolt.

STATE OF ILLINOIS
DEPARTMENT OF TRANSPORTATION

ROUTE NO.	SECTION	COUNTY	TOTAL SHEETS	SHEET NO.
S.B.I. F.A.I. 39	5HBD	WINNEBAGO	171	140
FED. ROAD DIST. NO. 7		ILLINOIS	FED. AID PROJECT-	

SHEET NO. 34
52 SHEETS

D	E	H	K	"d"
1"	$1\frac{1}{8}$"	$\frac{13}{16}$"	$1\frac{3}{4}$"	$\frac{1}{4}$"
$1\frac{1}{2}$"	$1\frac{5}{8}$"	$1\frac{5}{16}$"	$2\frac{1}{8}$"	$\frac{1}{2}$"
2"	$2\frac{1}{8}$"	$1\frac{13}{16}$"	$2\frac{7}{8}$"	$\frac{1}{2}$"
$2\frac{1}{2}$"	$2\frac{5}{8}$"	$2\frac{5}{16}$"	$3\frac{3}{8}$"	1"

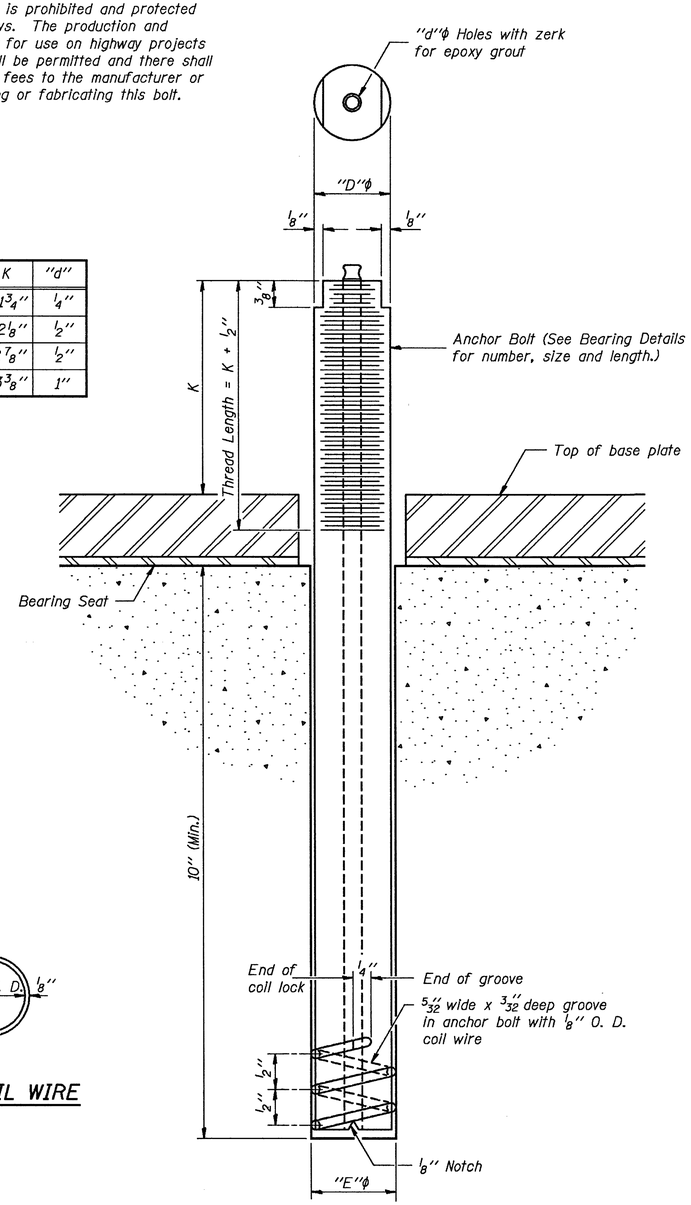

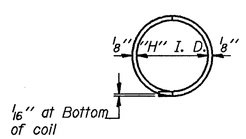

PLAN-COIL WIRE

ILLINOIS COIL-LOCK ANCHOR BOLT

MATERIALS FOR ILLINOIS COIL-LOCK ANCHOR BOLT

The anchor bolt shall be fabricated from cold drawn or hot finished seamless carbon steel mechanical tubing conforming to ASTM A519, Grade 1026 and supplied with hexagonal nuts and cut washers.

The coil wire shall be made of any suitable soft steel wire.

The finished anchor bolt shall be cleaned of rust and other foreign materials and wrapped or packaged to prevent contamination until they are installed.

The epoxy grout shall be a two-component, epoxy resin bonding system comforming to ASTM C881, Type I, Grade 1 and of a Class suitable for the temperature at installation.

INSTALLATION PROCEDURE for the ILLINOIS COIL-LOCK ANCHOR BOLT

1. With the coil wire in place, the bolt shall be inserted into the hole and turned clockwise to a snug fit in the hole. Nut and washer shall be placed on the bolt. The nut shall be tensioned until the steel base plates are held securely to the concrete bearing seat.
2. Epoxy grout shall be pumped through the zerk fitting with a pressure gun. Pumping shall continue until the epoxy overflows the hole around the bolt shank. After pumping is discontinued, excess epoxy shall be immediately wiped off.

ALTERNATE ANCHOR BOLTS

The Contractor may use, at his option, the capsule or the adhesive cartridge type anchor rods that have been previously tested and given a prior approval by the Department. The Contractor shall install these anchor rods in pre-drilled holes in accordance with the manufacturer's recommendations and procedures.

The capsule or the adhesive cartridge type anchor rods shall be a two part system composed of:

1. A threaded rod stud with nut and washer conforming to ASTM A307.
2. A sealed glass capsule or a sealed glass adhesive cartridge containing premeasured amounts of the adhesive chemical.

GENERAL NOTES

Holes in the masonry for anchor bolts shall be drilled through the base plates to the diameter and depth shown or in accordance with the manufacturer's recommendation after beams or girders have been erected and adjusted.

Prior to setting the bolts, the holes shall be dry and all dust and loose particles shall be removed by the use of compressed air or vacuuming.

The anchor bolts, furnished and installed and including the epoxy grout or capsules shall not be paid for separately but shall be included in the unit bid price for "Furnishing and Erecting Structural Steel".

DESIGNED	RTBoro
CHECKED	Sheila E. Morgisher
DRAWN	R. Doty
CHECKED	RTB SOM

May 17 1990
EXAMINED Raj D. Kaspar
ENGINEER OF BRIDGE DESIGN
PASSED Ralph E. Anderson
ENGINEER OF BRIDGES AND STRUCTURES
APPROVED
DIRECTOR OF HIGHWAYS

ABB-1 12-1-83

ANCHOR BOLT DETAILS
FOR BEARINGS
F.A.I. RT. 39 SEC. 5HBD
WINNEBAGO COUNTY
STA. 872+39.77

STATE OF ILLINOIS
DEPARTMENT OF TRANSPORTATION

ROUTE NO.	SECTION	COUNTY	TOTAL SHEETS	SHEET NO.
S.B.I. F.A.I. 39	5HBD	WINNEBAGO	171	141
FED. ROAD DIST. NO. 7		ILLINOIS	FED. AID PROJECT-	

SHEET NO. 35
52 SHEETS

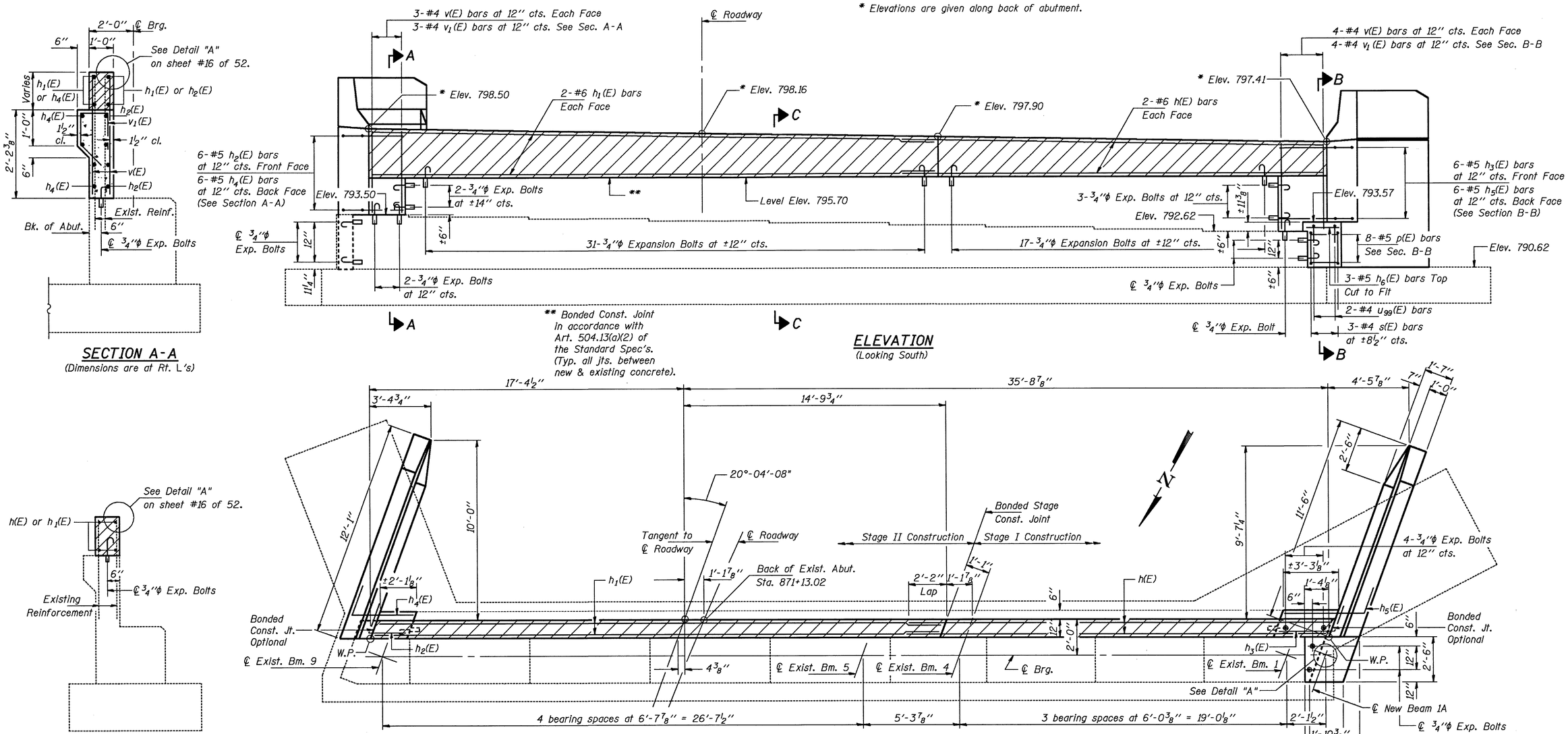

Notes: All edges shall have standard ¾" chamfers except as noted.
Space reinforcement in cap to miss anchor bolts.
Reinforcement bars designated (E) shall be epoxy coated.
Hatched area to be poured after superstructure forms have been removed. Quantity of concrete is included with "Class X Concrete Superstructure" on sheet #16 of 52.
For anchor bolt installation details see sheet #34 of 52.
Existing vertical reinforcement shall be cleaned, straightened and incorporated into the new construction.
Work this sheet with sheet #36 of 52.

DESIGNED	R T Boro
CHECKED	Steele E Moynihan
DRAWN	R. Doty
CHECKED	RTB SOM

May 17 1990
EXAMINED Greg D. Kaspar — ENGINEER OF BRIDGE DESIGN
PASSED Ralph E. Anderson — ENGINEER OF BRIDGES AND STRUCTURES
APPROVED — DIRECTOR OF HIGHWAYS

SOUTH ABUTMENT
WEST BOUND LANES
F.A.I. RT. 39 SEC. 5HBD
WINNEBAGO COUNTY
STA. 872+39.77

ROUTE NO.	SECTION	COUNTY	TOTAL SHEETS	SHEET NO.
S.B.I. F.A.I. 39	5HBD	WINNEBAGO	171	142
FED. ROAD DIST. NO. 7	ILLINOIS	FED. AID PROJECT-		

SHEET NO. 36
52 SHEETS

STATE OF ILLINOIS
DEPARTMENT OF TRANSPORTATION

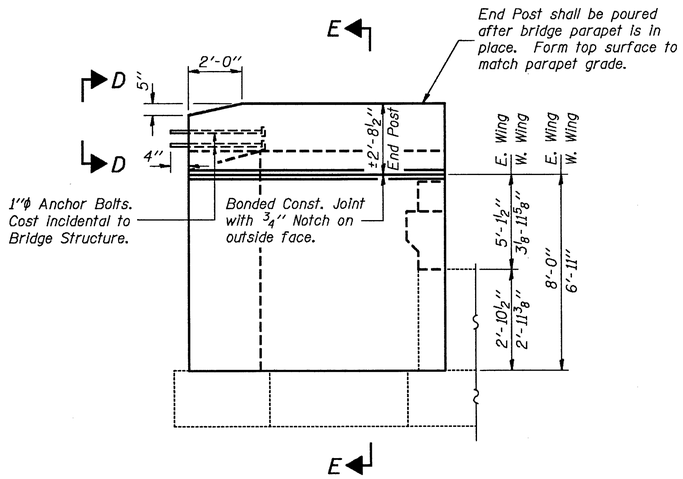

WING WALL ELEVATION

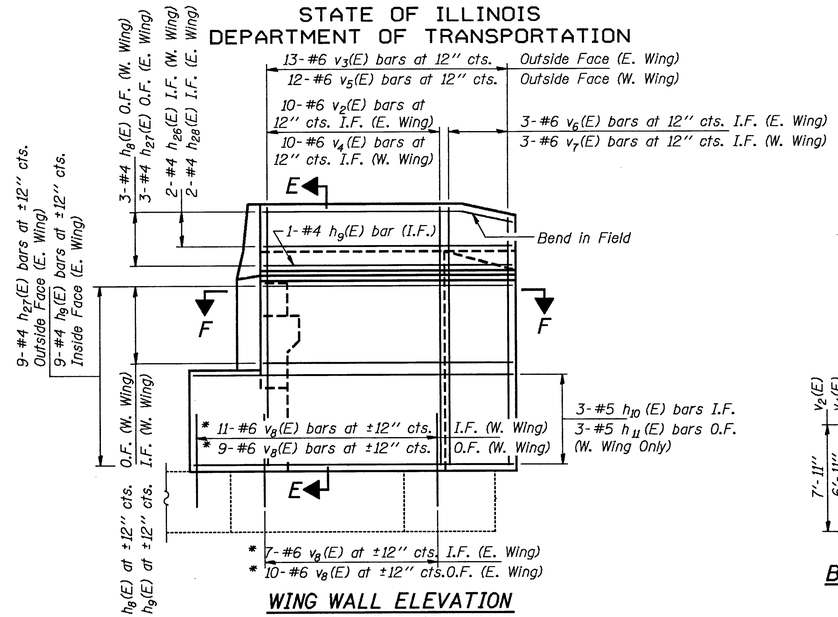

WING WALL ELEVATION
Reinforcement

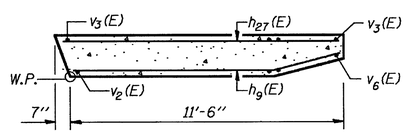

SEC. F-F
(East Wing)

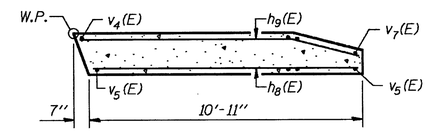

SEC. F-F
(West Wing)

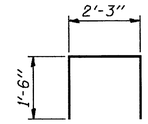

BAR u99(E)

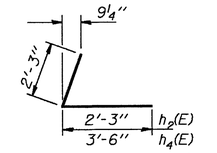

BARS h2(E) & h4(E)

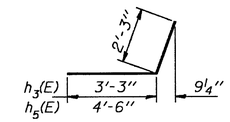

BARS h3(E) & h5(E)

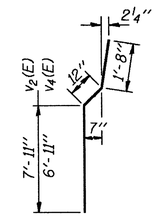

BARS v2(E) & v4(E)

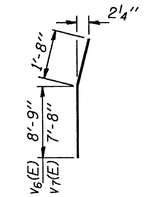

BARS v6(E) & v7(E)

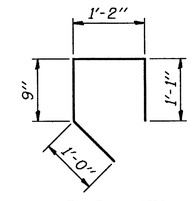

BAR v1(E)

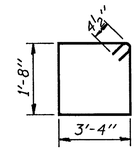

BAR s(E)

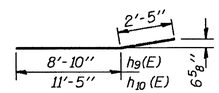

BARS h9(E) & h10 (E)

BILL OF MATERIAL

Bar	No.	Size	Length	Shape
h(E)	4	#6	23'-4"	
h1(E)	4	#6	31'-6"	
h2(E)	6	#5	4'-6"	
h3(E)	6	#5	5'-6"	
h4(E)	6	#5	5'-9"	
h5(E)	6	#5	6'-9"	
h6(E)	3	#5	2'-9"	
h8(E)	8	#4	10'-8"	
h9(E)	15	#4	11'-3"	
h10(E)	3	#5	13'-10"	
h11 (E)	3	#5	13'-4"	
h26(E)	2	#4	10'-11"	
h27(E)	12	#4	11'-9"	
h28(E)	2	#4	11'-6"	
p(E)	8	#5	1'-7"	
s(E)	3	#4	10'-9"	
u99(E)	2	#4	5'-3"	
v(E)	14	#4	4'-9"	
v1(E)	7	#4	4'-0"	
v2(E)	10	#6	10'-7"	
v3(E)	13	#6	10'-5"	
v4(E)	10	#6	9'-7"	
v5(E)	12	#6	9'-5"	
v6(E)	3	#6	10'-5"	
v7(E)	3	#6	9'-4"	
v8(E)	37	#6	2'-0"	
Structure Excavation			Cu. Yd.	35
Class X Concrete			Cu. Yd.	13.4
Reinforcement Bars, Epoxy Coated			Lbs.	1840
Expansion Bolts, ¾"ϕ			Each	69

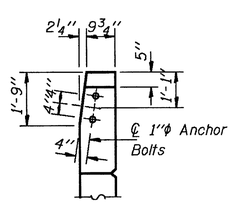

VIEW D-D

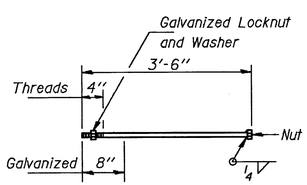

1"ϕ ANCHOR BOLT

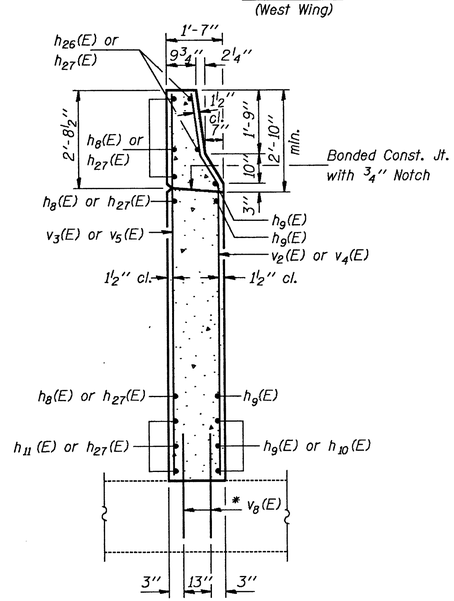

SEC. E-E

* Drill 1"ϕ x 9" Min. hole. Epoxy grout v8(E) bars See Special Provisions.

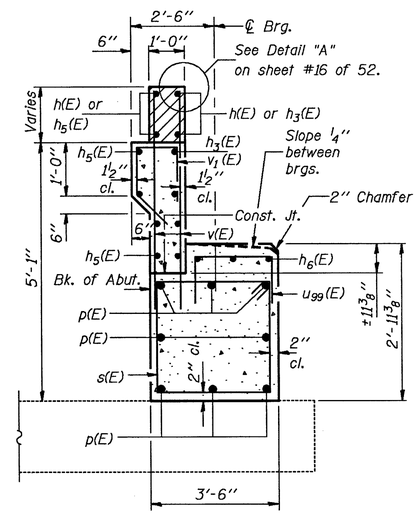

SECTION B-B
(Dimensions are at Rt. L's)

Note: Work this sheet with sheet #35 of 52.

DESIGNED	RTB 020
CHECKED	Sheila E. Magnuson
DRAWN	R. Doty
CHECKED	RTB SEM

May 17 1996
EXAMINED Greg L. Kaspar — ENGINEER OF BRIDGE DESIGN
PASSED Ralph E. Anderson — ENGINEER OF BRIDGES AND STRUCTURES
APPROVED — DIRECTOR OF HIGHWAYS

SOUTH ABUTMENT DETAILS
WEST BOUND LANES
F.A.I. RT. 39 SEC. 5HBD
WINNEBAGO COUNTY
STA. 872+39.77

ROUTE NO.	SECTION	COUNTY	TOTAL SHEETS	SHEET NO.
S.B.I.L. F.A.I. 39	5HBD	WINNEBAGO	171	143
FED. ROAD DIST. NO. 7	ILLINOIS	FED. AID PROJECT-		

SHEET NO. 37
52 SHEETS

STATE OF ILLINOIS
DEPARTMENT OF TRANSPORTATION

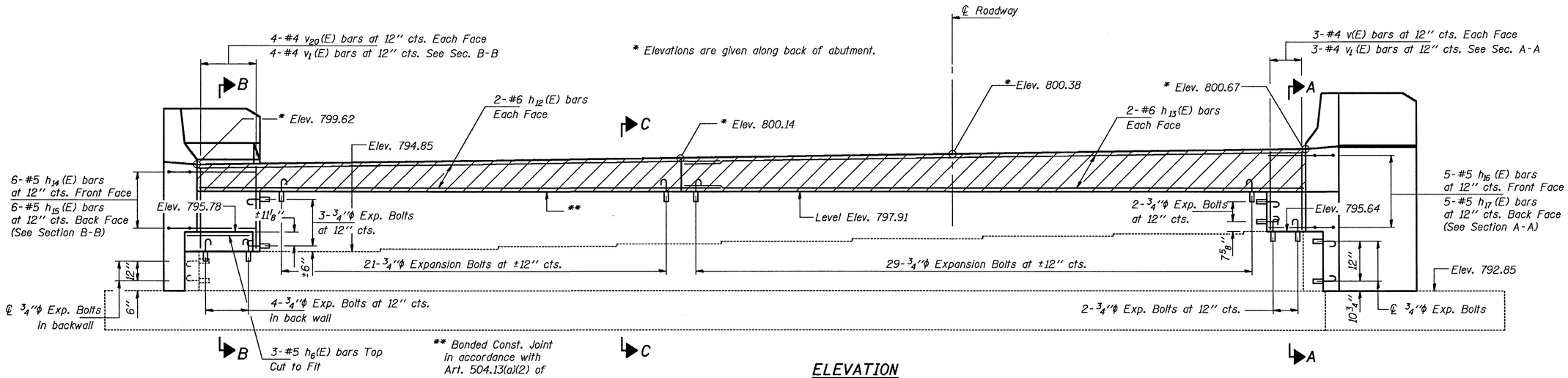

ELEVATION
(Looking North)

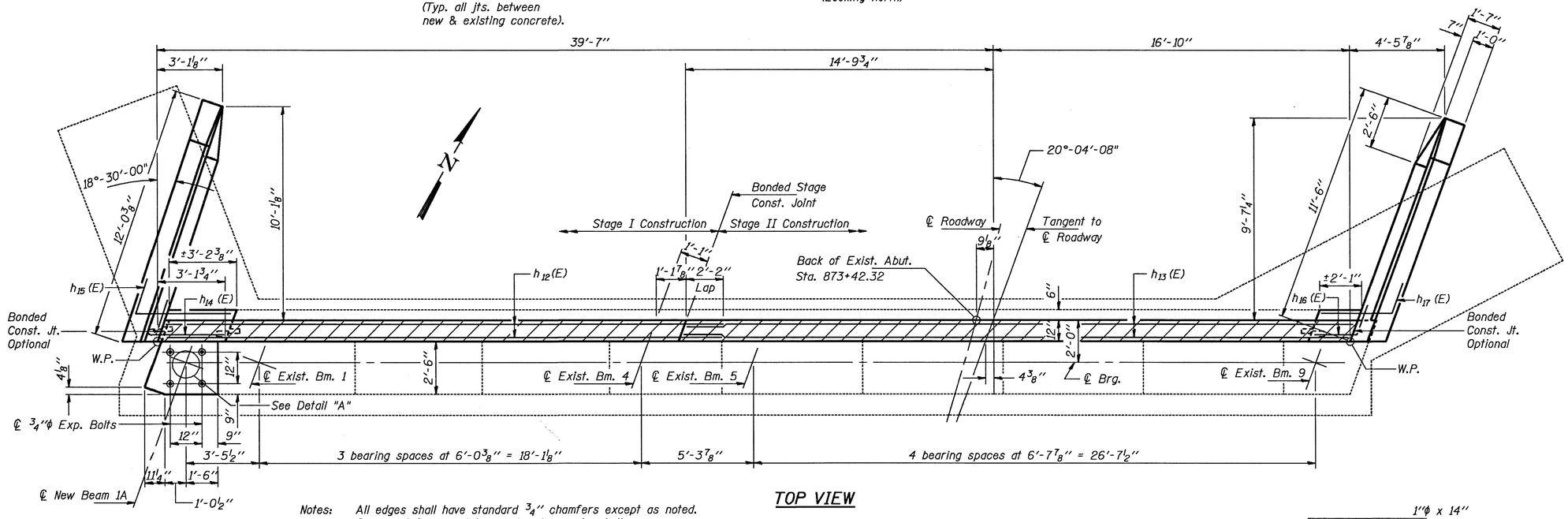

TOP VIEW

Notes:
All edges shall have standard ¾" chamfers except as noted.
Space reinforcement in cap to miss anchor bolts.
Reinforcement bars designated (E) shall be epoxy coated.
Hatched area to be poured after superstructure forms have been removed. Quantity of concrete is included with "Class X Concrete Superstructure" on sheet #16 of 52.
For anchor bolt installation details see sheet #34 of 52.
Existing vertical reinforcement shall be cleaned, straightened and incorporated into the new construction.
Work this sheet with sheet #38 of 52.

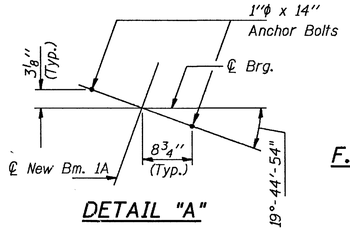

DETAIL "A"

DESIGNED	RTBoro
CHECKED	Shale E. Moyuba
DRAWN	R. Doty
CHECKED	RTB SOM

May 17 1990

EXAMINED Jaj J. Kaspar — ENGINEER OF BRIDGE DESIGN

PASSED Ralph E. Anderson — ENGINEER OF BRIDGES AND STRUCTURES

APPROVED _____ DIRECTOR OF HIGHWAYS

NORTH ABUTMENT
WEST BOUND LANES
F.A.I. RT. 39 SEC. 5HBD
WINNEBAGO COUNTY
STA. 872+39.77

STATE OF ILLINOIS
DEPARTMENT OF TRANSPORTATION

ROUTE NO.	SECTION	COUNTY	TOTAL SHEETS	SHEET NO.
S. B. I. F. A. I. 39	5HBD	WINNEBAGO	171	144
FED. ROAD DIST. NO. 7		ILLINOIS	FED. AID PROJECT-	

SHEET NO. 38
52 SHEETS

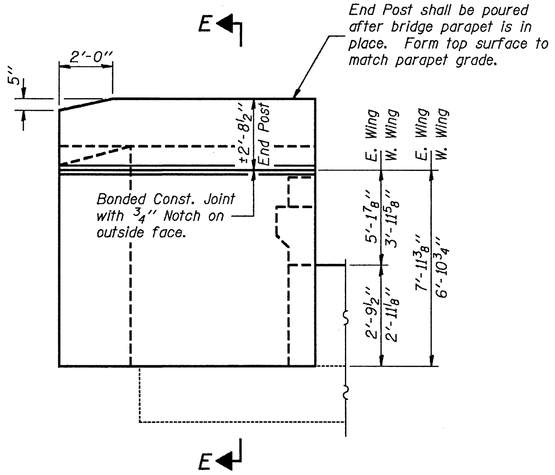

WING WALL ELEVATION

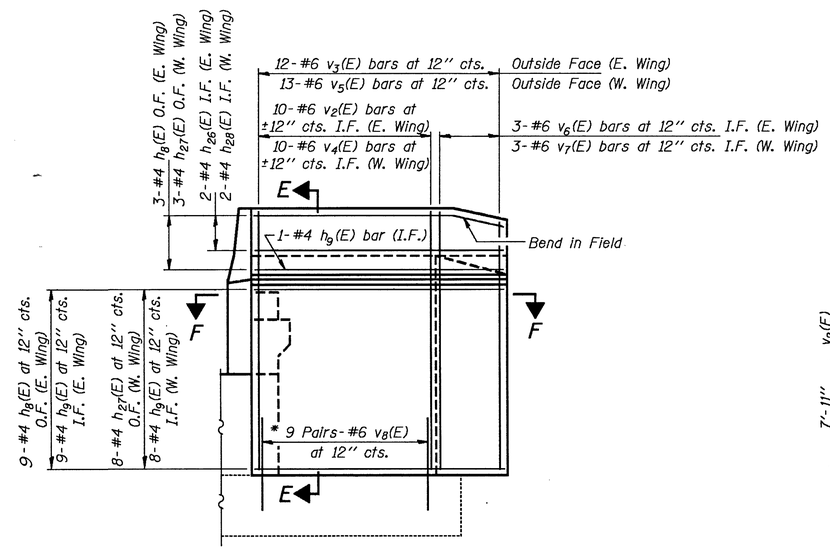

WING WALL ELEVATION
Reinforcement

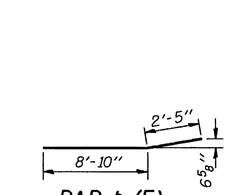

BAR h9(E)

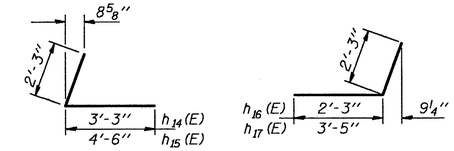

BARS h14 (E) & h15 (E)

BARS h16 (E) & h17 (E)

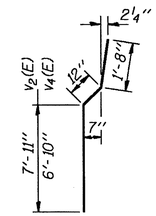

BARS v2(E) & v4(E)

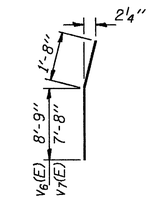

BARS v6(E) & v7(E)

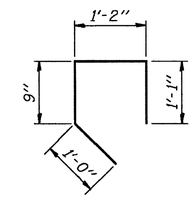

BAR v1(E)

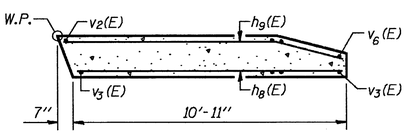

SEC. F-F
(East Wing)

* Drill 1"ϕ x 9" Min. hole. Epoxy grout v8(E) bars See Special Provisions.

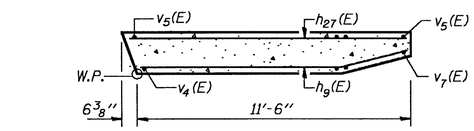

SEC. F-F
(West Wing)

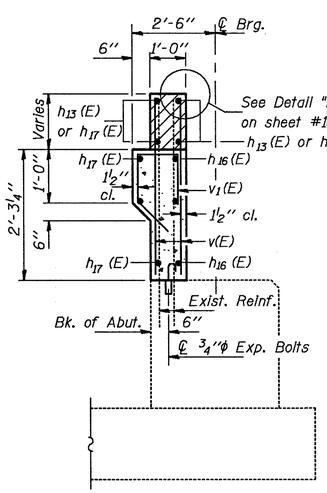

SECTION A-A
(Dimensions are at Rt. L's)

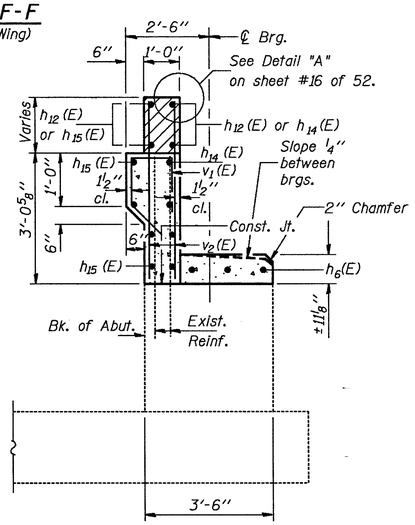

SECTION B-B
(Dimensions are at Rt. L's)

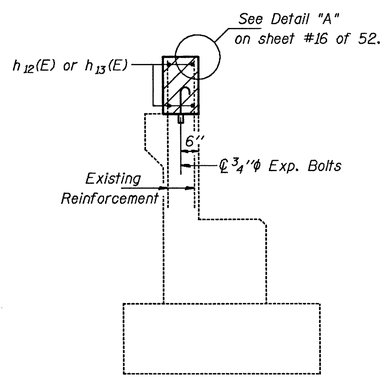

SECTION C-C

Note: Work this sheet with sheet #37 of 52.

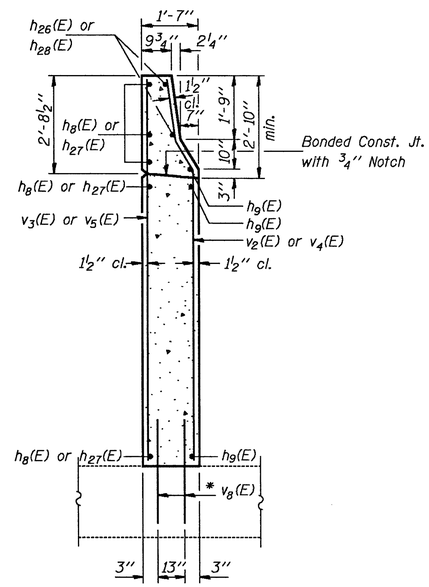

SEC. E-E

BILL OF MATERIAL

Bar	No.	Size	Length	Shape
h6(E)	3	#5	2'-9"	
h8(E)	12	#4	10'-8"	
h9(E)	19	#4	11'-3"	
h12(E)	4	#6	26'-8"	
h13(E)	4	#6	31'-9"	
h14(E)	6	#5	5'-6"	
h15(E)	6	#5	6'-9"	
h16(E)	5	#5	4'-6"	
h17(E)	5	#5	5'-8"	
h26(E)	2	#4	10'-11"	
h28(E)	2	#4	11'-6"	
v(E)	6	#4	4'-9"	
v1(E)	7	#4	4'-0"	
v2(E)	10	#6	10'-7"	
v3(E)	12	#6	10'-5"	
v4(E)	10	#6	9'-7"	
v5(E)	13	#6	9'-5"	
v6(E)	3	#6	10'-5"	
v7(E)	3	#6	9'-4"	
v8(E)	36	#6	2'-0"	
v20(E)	8	#4	4'-6"	
Structure Excavation			Cu. Yd.	32
Class X Concrete			Cu. Yd.	12.8
Reinforcement Bars, Epoxy Coated			Lbs.	1680
Expansion Bolts, ¾"ϕ			Each	69

DESIGNED	RTBors
CHECKED	Shirle E. Moynihan
DRAWN	R. Doty
CHECKED	RTB SEM

May 17 1990
EXAMINED Jaj. O. Kaspar
ENGINEER OF BRIDGE DESIGN
PASSED Ralph E. Anderson
ENGINEER OF BRIDGES AND STRUCTURES
APPROVED
DIRECTOR OF HIGHWAYS

NORTH ABUTMENT DETAILS
WEST BOUND LANES
F.A.I. RT. 39 SEC. 5HBD
WINNEBAGO COUNTY
STA. 872+39.77

ROUTE NO.	SECTION	COUNTY	TOTAL SHEETS	SHEET NO.
S.B.I. F.A.I. 39	5HBD	WINNEBAGO	171	145
FED. ROAD DIST. NO. 7		ILLINOIS	FED. AID PROJECT-	

SHEET NO. 39
52 SHEETS

STATE OF ILLINOIS
DEPARTMENT OF TRANSPORTATION

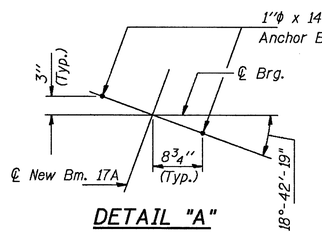

DETAIL "A"

* Elevations are given along back of abutment.

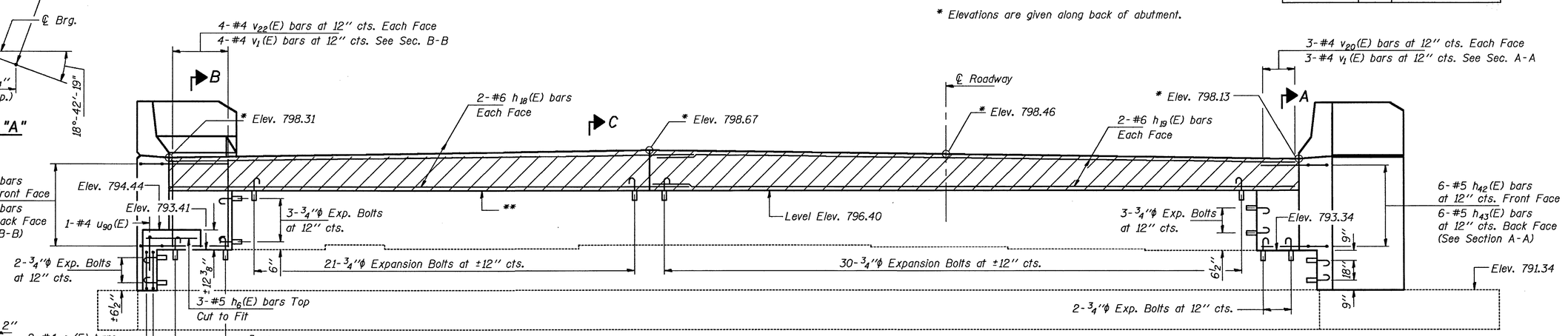

ELEVATION
(Looking South)

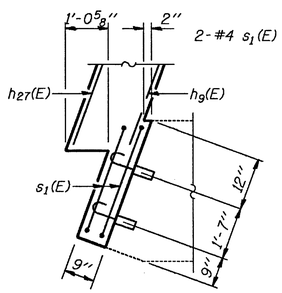

PLAN - CAP EXTENSION

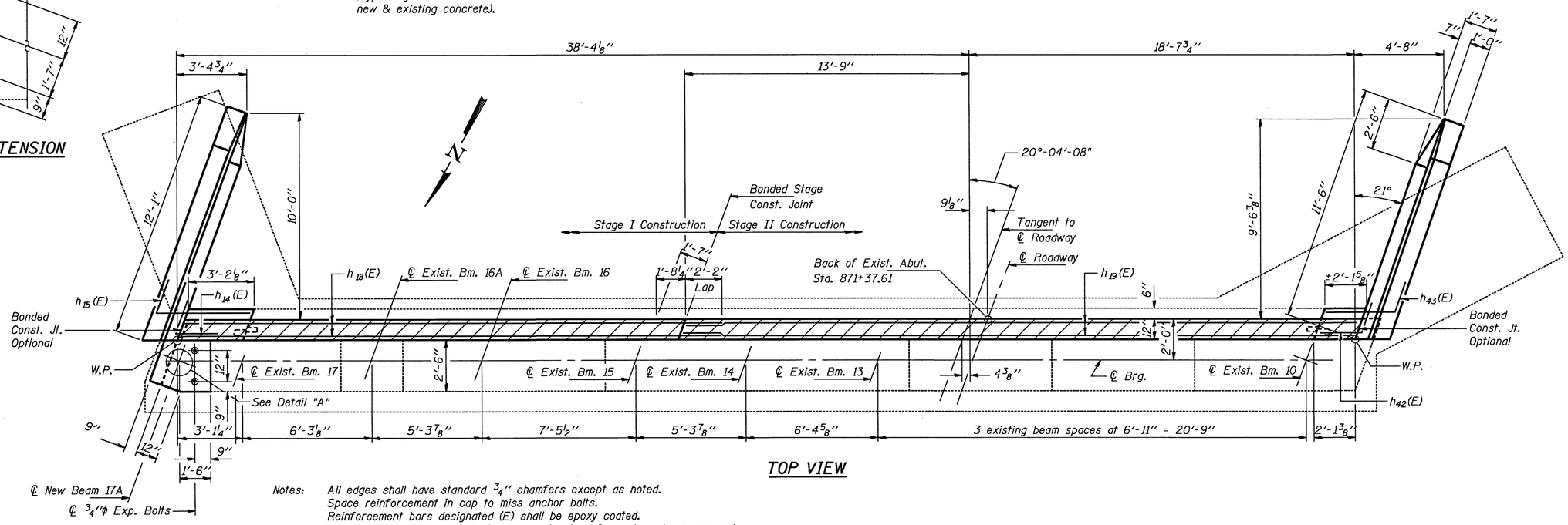

TOP VIEW

Notes:
All edges shall have standard ¾" chamfers except as noted.
Space reinforcement in cap to miss anchor bolts.
Reinforcement bars designated (E) shall be epoxy coated.
Hatched area to be poured after superstructure forms have been removed. Quantity of concrete is included with "Class X Concrete Superstructure" on sheet #20 of 52.
For anchor bolt installation details see sheet #34 of 52.
Existing vertical reinforcement shall be cleaned, straightened and incorporated into the new construction.
Work this sheet with sheet #40 of 52.

DESIGNED	RTBoo
CHECKED	Sheila E. Moquitar
DRAWN	R. Doty
CHECKED	RTB SEM

May 17 1990
EXAMINED Greg J. Kaspar — ENGINEER OF BRIDGE DESIGN
PASSED Ralph E. Anderson — ENGINEER OF BRIDGES AND STRUCTURES
APPROVED — DIRECTOR OF HIGHWAYS

SOUTH ABUTMENT
EAST BOUND LANES
F.A.I. RT. 39 SEC. 5HBD
WINNEBAGO COUNTY
STA. 872+39.77

ROUTE NO.	SECTION	COUNTY	TOTAL SHEETS	SHEET NO.
S. B. I. F. A. I. 39	5HBD	WINNEBAGO	171	146
FED. ROAD DIST. NO. 7		ILLINOIS	FED. AID PROJECT-	

SHEET NO. 40
52 SHEETS

STATE OF ILLINOIS
DEPARTMENT OF TRANSPORTATION

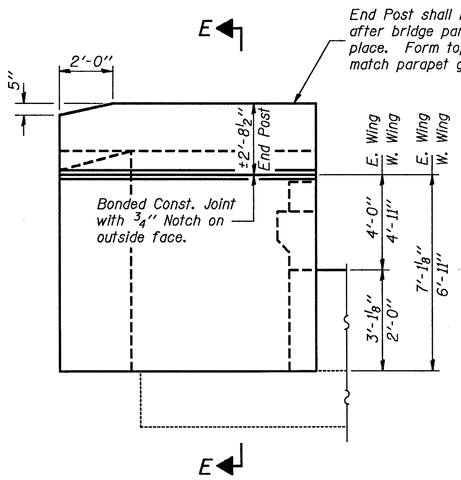

WING WALL ELEVATION

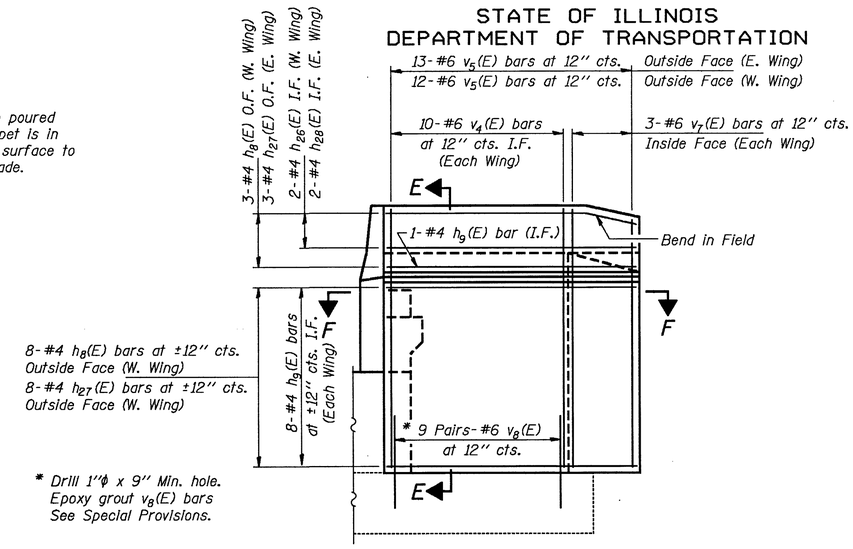

* Drill 1"ϕ x 9" Min. hole. Epoxy grout v8(E) bars See Special Provisions.

WING WALL ELEVATION
Reinforcement

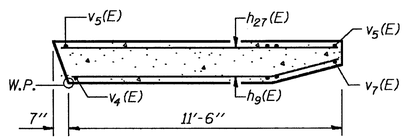

SEC. F-F
(East Wing)

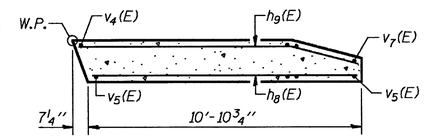

SEC. F-F
(West Wing)

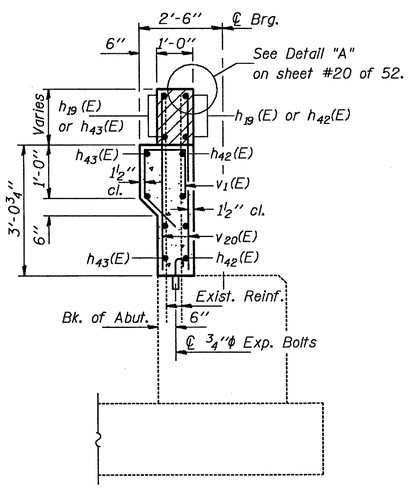

SECTION A-A
(Dimensions are at Rt. L's)

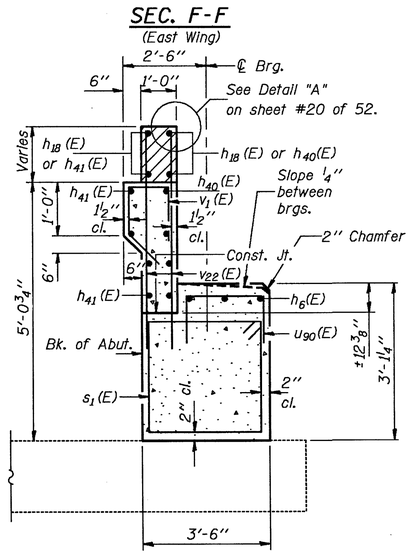

SECTION B-B
(Dimensions are at Rt. L's)

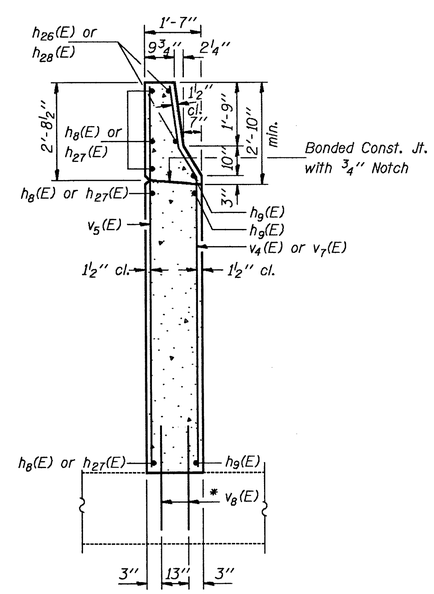

SEC. E-E

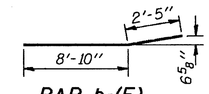

BAR h9(E)

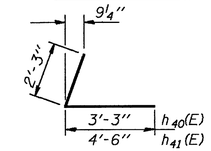

BARS h40(E) & h41(E)

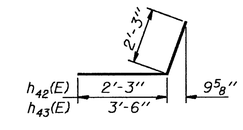

BARS h42(E) & h43(E)

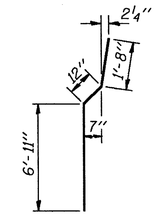

BAR v4(E)

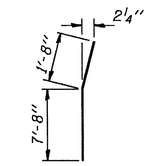

BAR v7(E)

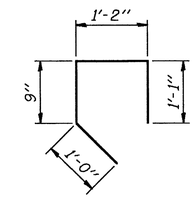

BAR v1(E)

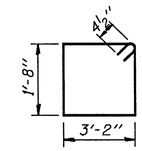

BAR s1(E)

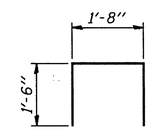

BAR u90(E)

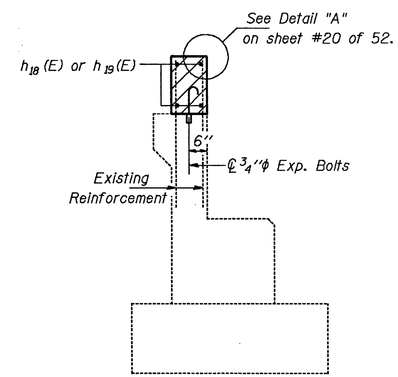

SECTION C-C

Note: Work this sheet with sheet #39 of 52.

BILL OF MATERIAL

Bar	No.	Size	Length	Shape
h8(E)	11	#4	10'-8"	
h9(E)	18	#4	11'-3"	
h18(E)	4	#6	26'-6"	
h19(E)	4	#6	32'-6"	
h26(E)	2	#4	10'-11"	
h27(E)	11	#4	11'-9"	
h28(E)	2	#4	11'-6"	
h40(E)	6	#5	5'-6"	L
h41(E)	6	#5	6'-9"	L
h42(E)	6	#5	4'-6"	L
h43(E)	6	#5	5'-9"	L
s1(E)	2	#4	10'-5"	
u90(E)	1	#4	4'-8"	
v1(E)	7	#4	4'-0"	
v4(E)	20	#6	9'-7"	
v5(E)	25	#6	9'-5"	
v7(E)	6	#6	9'-4"	
v8(E)	36	#6	2'-0"	
v20(E)	6	#4	4'-6"	
v22(E)	8	#4	5'-9"	
Structure Excavation			Cu. Yd.	29
Class X Concrete			Cu. Yd.	12.6
Reinforcement Bars, Epoxy Coated			Lbs.	1740
Expansion Bolts, ¾"ϕ			Each	70

DESIGNED	R.T. Boro
CHECKED	Sheila E. Magnuson
DRAWN	R. Doty
CHECKED	RTB SEM

May 17 1990
EXAMINED Greg J. Kaspar — ENGINEER OF BRIDGE DESIGN
PASSED Ralph E. Anderson — ENGINEER OF BRIDGES AND STRUCTURES
APPROVED — DIRECTOR OF HIGHWAYS

SOUTH ABUTMENT DETAILS
EAST BOUND LANES
F.A.I. RT. 39 SEC. 5HBD
WINNEBAGO COUNTY
STA. 872+39.77

STATE OF ILLINOIS
DEPARTMENT OF TRANSPORTATION

ROUTE NO.	SECTION	COUNTY	TOTAL SHEETS	SHEET NO.
S.B.I. F.A.I. 39	5HBD	WINNEBAGO	171	147
FED. ROAD DIST. NO. 7		ILLINOIS	FED. AID PROJECT-	

SHEET NO. 41
52 SHEETS

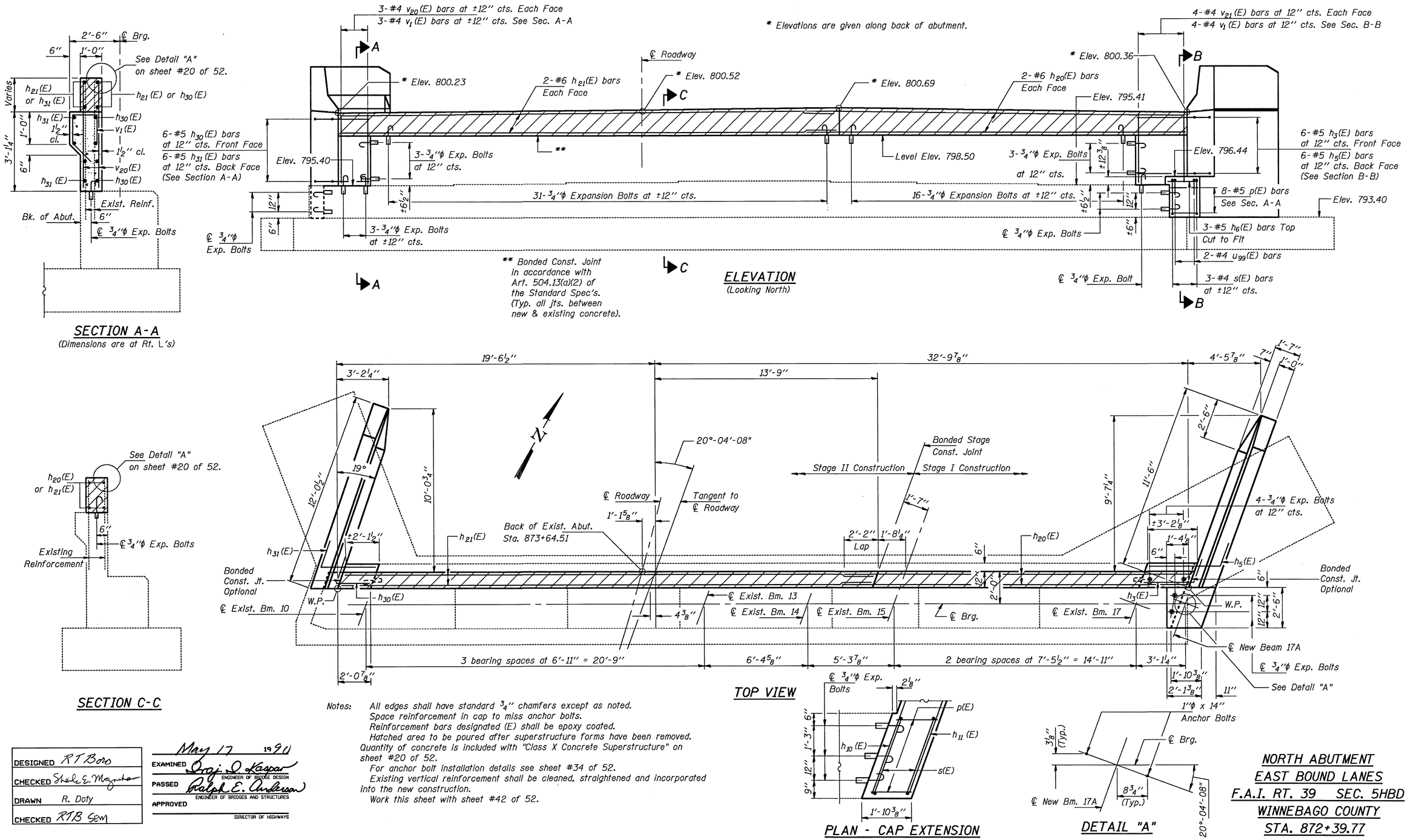

Notes:
All edges shall have standard ¾" chamfers except as noted.
Space reinforcement in cap to miss anchor bolts.
Reinforcement bars designated (E) shall be epoxy coated.
Hatched area to be poured after superstructure forms have been removed. Quantity of concrete is included with "Class X Concrete Superstructure" on sheet #20 of 52.
For anchor bolt installation details see sheet #34 of 52.
Existing vertical reinforcement shall be cleaned, straightened and incorporated into the new construction.
Work this sheet with sheet #42 of 52.

DESIGNED	R.T. Boro
CHECKED	Sheila E. Magnuson
DRAWN	R. Doty
CHECKED	R.T.B. Sem

May 17 1990
EXAMINED Greg J. Kaspar — ENGINEER OF BRIDGE DESIGN
PASSED Ralph E. Anderson — ENGINEER OF BRIDGES AND STRUCTURES
APPROVED — DIRECTOR OF HIGHWAYS

NORTH ABUTMENT
EAST BOUND LANES
F.A.I. RT. 39 SEC. 5HBD
WINNEBAGO COUNTY
STA. 872+39.77

ROUTE NO.	SECTION	COUNTY	TOTAL SHEETS	SHEET NO.
S.B.I. F.A.I. 39	5HBD	WINNEBAGO	171	148
FED. ROAD DIST. NO. 7		ILLINOIS	FED. AID PROJECT:-	

SHEET NO. 42
52 SHEETS

STATE OF ILLINOIS
DEPARTMENT OF TRANSPORTATION

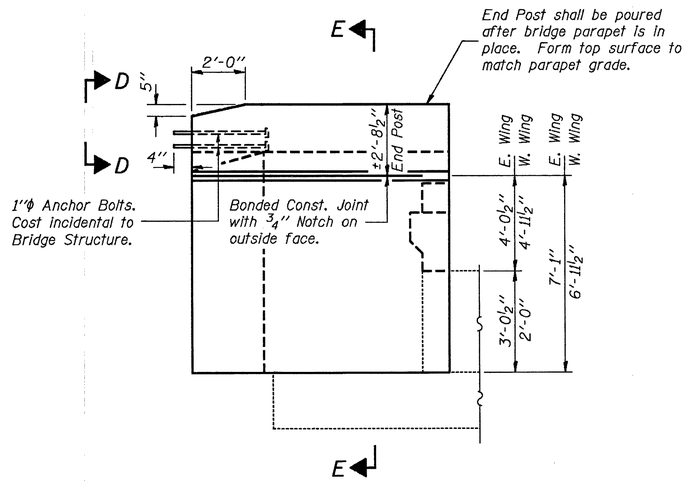

WING WALL ELEVATION

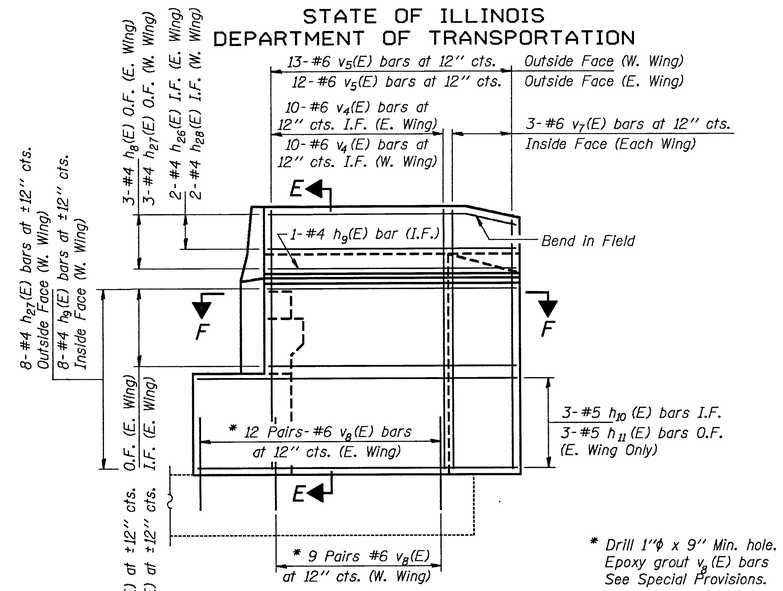

WING WALL ELEVATION
Reinforcement

* Drill 1"φ x 9" Min. hole. Epoxy grout v8(E) bars See Special Provisions.

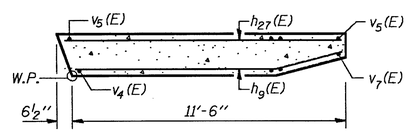

SEC. F-F
(West Wing)

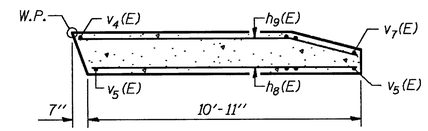

SEC. F-F
(East Wing)

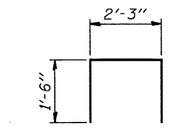

BAR u99(E)

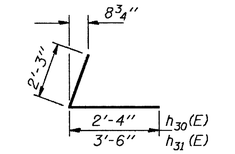

BARS h30(E) & h31(E)

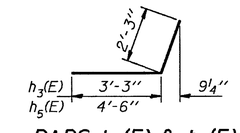

BARS h3(E) & h5(E)

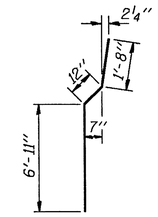

BAR v4(E)

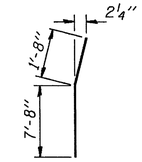

BAR v7(E)

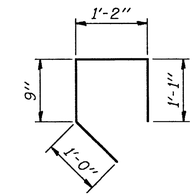

BAR v1(E)

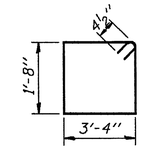

BAR s(E)

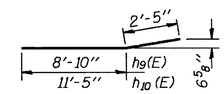

BARS h9(E) & h10 (E)

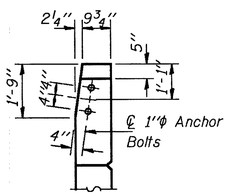

VIEW D-D

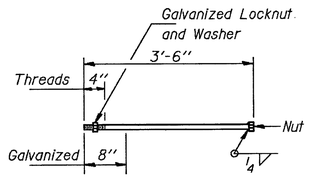

1"φ ANCHOR BOLT

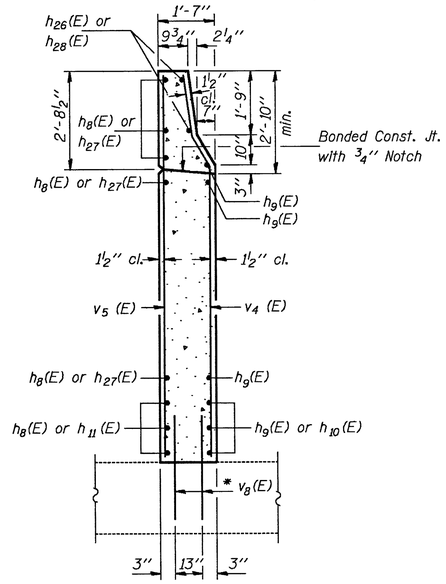

SEC. E-E

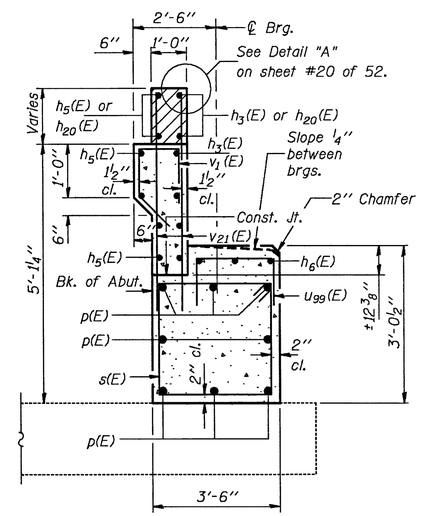

SECTION B-B
(Dimensions are at Rt. L's)

BILL OF MATERIAL

Bar	No.	Size	Length	Shape
h3(E)	6	#5	5'-6"	
h5(E)	6	#5	6'-9"	
h6(E)	3	#5	2'-9"	
h8(E)	8	#4	10'-8"	
h9(E)	15	#4	11'-3"	
h10 (E)	3	#5	13'-10"	
h11 (E)	3	#5	14'-0"	
h20(E)	4	#6	21'-8"	
h21(E)	4	#6	32'-8"	
h26(E)	2	#4	10'-11"	
h27(E)	11	#4	11'-9"	
h28(E)	2	#4	11'-6"	
h30(E)	6	#5	4'-7"	
h31 (E)	6	#5	5'-9"	
p(E)	8	#5	1'-7"	
s(E)	3	#4	10'-9"	
u99(E)	2	#4	5'-3"	
v1(E)	7	#4	4'-0"	
v4(E)	20	#6	9'-7"	
v5(E)	25	#6	9'-5"	
v7(E)	6	#6	9'-4"	
v8(E)	42	#6	2'-0"	
v20(E)	6	#4	4'-6"	
v21(E)	8	#4	4'-8"	
Structure Excavation			Cu. Yd.	30
Class X Concrete			Cu. Yd.	12.9
Reinforcement Bars, Epoxy Coated			Lbs.	1740
Expansion Bolts, ¾"φ			Each	70

Note: Work this sheet with sheet #41 of 52.

DESIGNED	RTBoro
CHECKED	Sheila E. Moynihan
DRAWN	R. Doty
CHECKED	RTB SEM

May 17 1990
EXAMINED Craig O. Kaspar — ENGINEER OF BRIDGE DESIGN
PASSED Ralph E. Anderson — ENGINEER OF BRIDGES AND STRUCTURES
APPROVED — DIRECTOR OF HIGHWAYS

NORTH ABUTMENT DETAILS
EAST BOUND LANES
F.A.I. RT. 39 SEC. 5HBD
WINNEBAGO COUNTY
STA. 872+39.77

STATE OF ILLINOIS
DEPARTMENT OF TRANSPORTATION

ROUTE NO.	SECTION	COUNTY	TOTAL SHEETS	SHEET NO.
U. S. I. F. A. I. 39	5HBD	WINNEBAGO	171	149
FED. ROAD DIST. NO. 7	ILLINOIS	FED. AID PROJECT-		

SHEET NO. 43
52 SHEETS

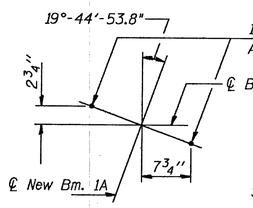

DETAIL "A"

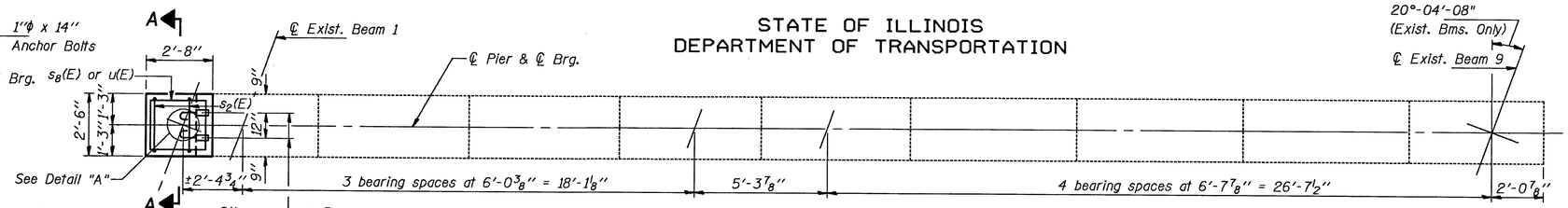

TOP PLAN

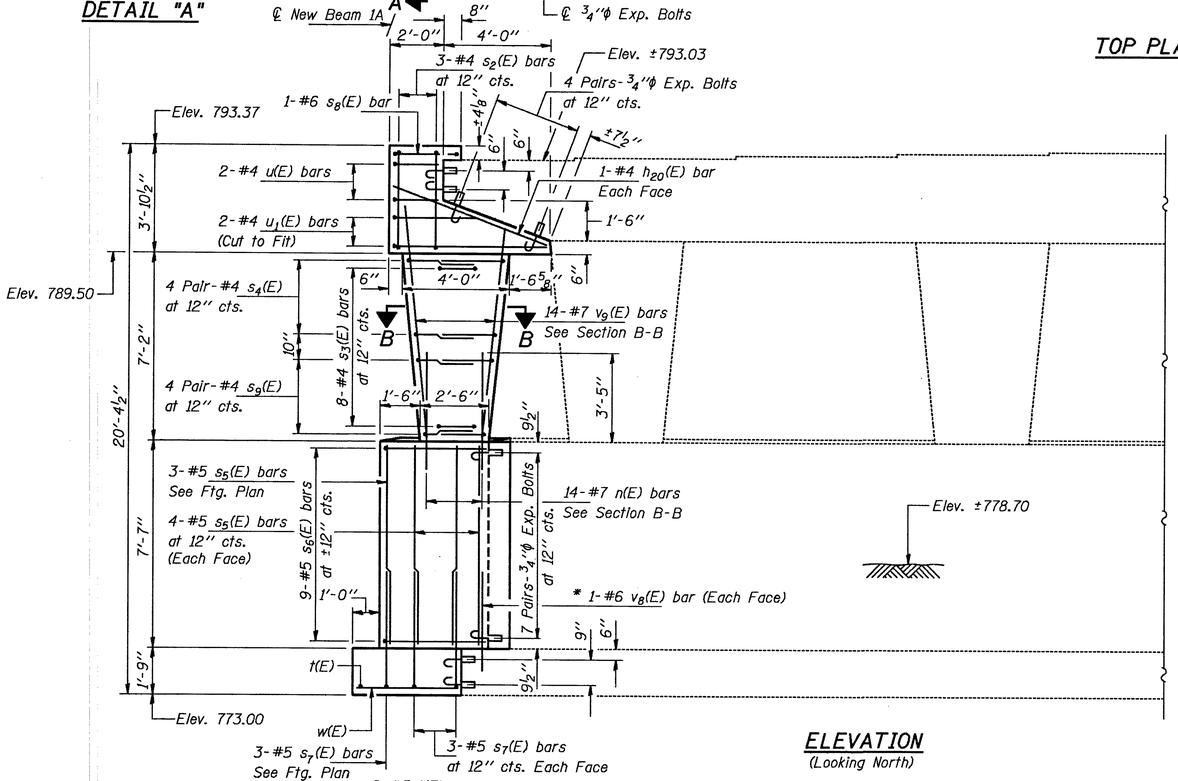

ELEVATION
(Looking North)

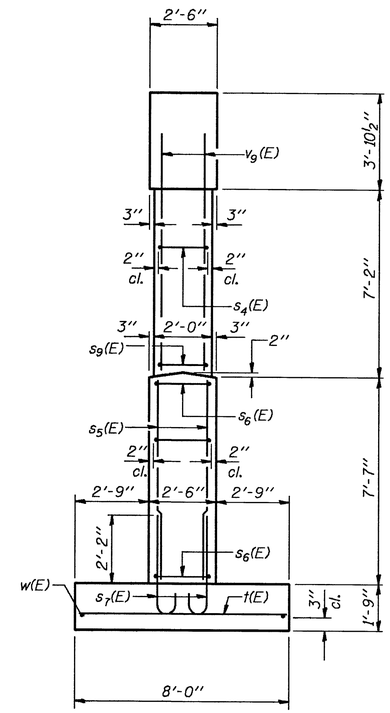

END VIEW

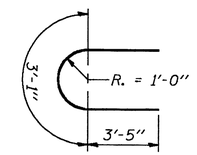

BAR s6(E)

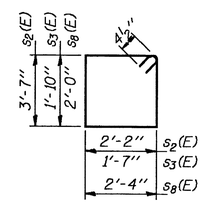

BARS s2(E), s3(E) & s8(E)

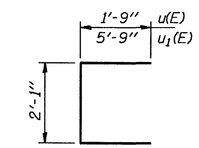

BARS u(E) & u1(E)

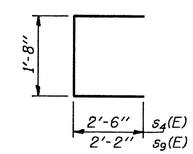

BARS s4(E) & s9(E)

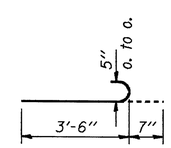

BAR s7(E)

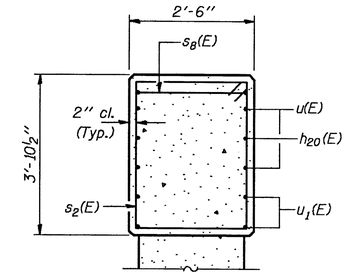

SECTION A-A

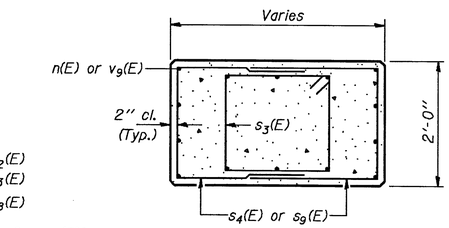

SECTION B-B

BILL OF MATERIAL

Bar	No.	Size	Length	Shape
h20(E)	2	#4	6'-2"	
n(E)	14	#7	6'-10"	
s2(E)	3	#4	12'-3"	
s3(E)	8	#4	7'-7"	
s4(E)	8	#4	6'-8"	
s5(E)	11	#5	7'-4"	
s6(E)	9	#5	9'-11"	
s7(E)	9	#5	4'-1"	
s8(E)	1	#6	9'-5"	
s9(E)	8	#4	6'-0"	
t(E)	9	#5	7'-9"	
u(E)	2	#4	5'-7"	
u1(E)	2	#4	13'-7"	
v8(E)	2	#6	3'-6"	
v9(E)	14	#7	9'-3"	
w(E)	9	#5	3'-9"	
Structure Excavation			Cu. Yd.	21
Class X Concrete			Cu. Yd.	7.7
Reinforcement Bars, Epoxy Coated			Lbs.	980
Expansion Bolts, ¾"φ			Each	42

Reinforcement Bars designated (E) shall be epoxy coated.

* Drill 1"φ x 9" Min. hole. Epoxy grout v8(E) bars. See Special Provisions.

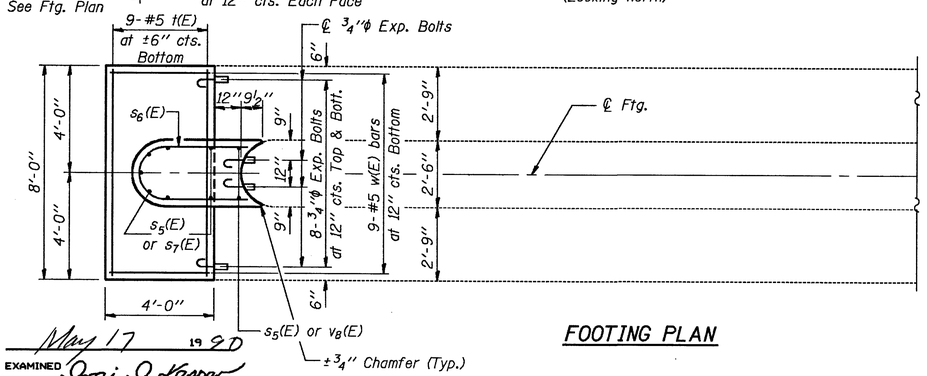

FOOTING PLAN

Max. Allowable Footing Pressure = 3.5 T.S.F.

Notes:
Space reinforcement in cap to miss anchor bolts.
All edges shall have standard ¾" chamfers except as noted.
Pour step monolithically with cap.
For anchor bolt installation details see sheet #34 of 52.
For existing bearings anchor bolts extension and plate details see sheet #33 of 52.
All construction joints between existing and new concrete shall be bonded construction joints in accordance with Art. 504.13 (a)(2) of the Standard Specifications.

DESIGNED	RTBoro
CHECKED	Sheila R. Magnuson
DRAWN	R. Doty
CHECKED	RTB SEM

May 17 1990

EXAMINED Graj J. Kaspar — ENGINEER OF BRIDGE DESIGN
PASSED Ralph E. Anderson — ENGINEER OF BRIDGES AND STRUCTURES
APPROVED — DIRECTOR OF HIGHWAYS

PIER 1
WEST BOUND LANES
F.A.I. RT. 39 SEC. 5HBD
WINNEBAGO COUNTY
STA. 872+39.77

STATE OF ILLINOIS
DEPARTMENT OF TRANSPORTATION

ROUTE NO.	SECTION	COUNTY	TOTAL SHEETS	SHEET NO.
S.B.I. F.A.I. 39	5HBD	WINNEBAGO	171	150
FED. ROAD DIST. NO. 7	ILLINOIS	FED. AID PROJECT:-		

SHEET NO. 44
52 SHEETS

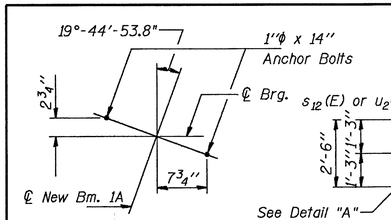

DETAIL "A"

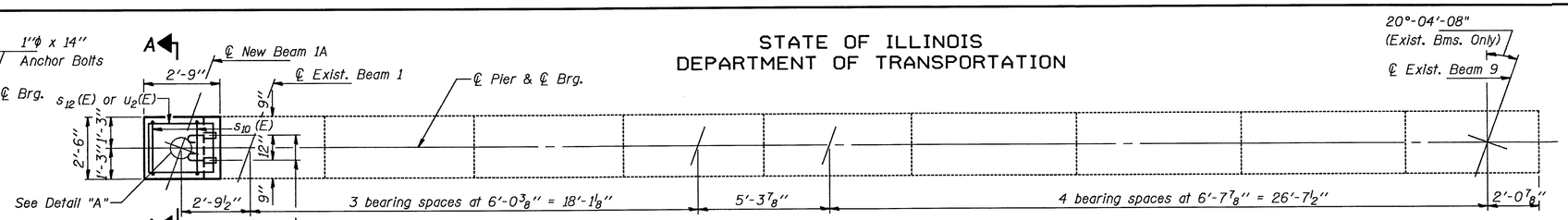

TOP PLAN

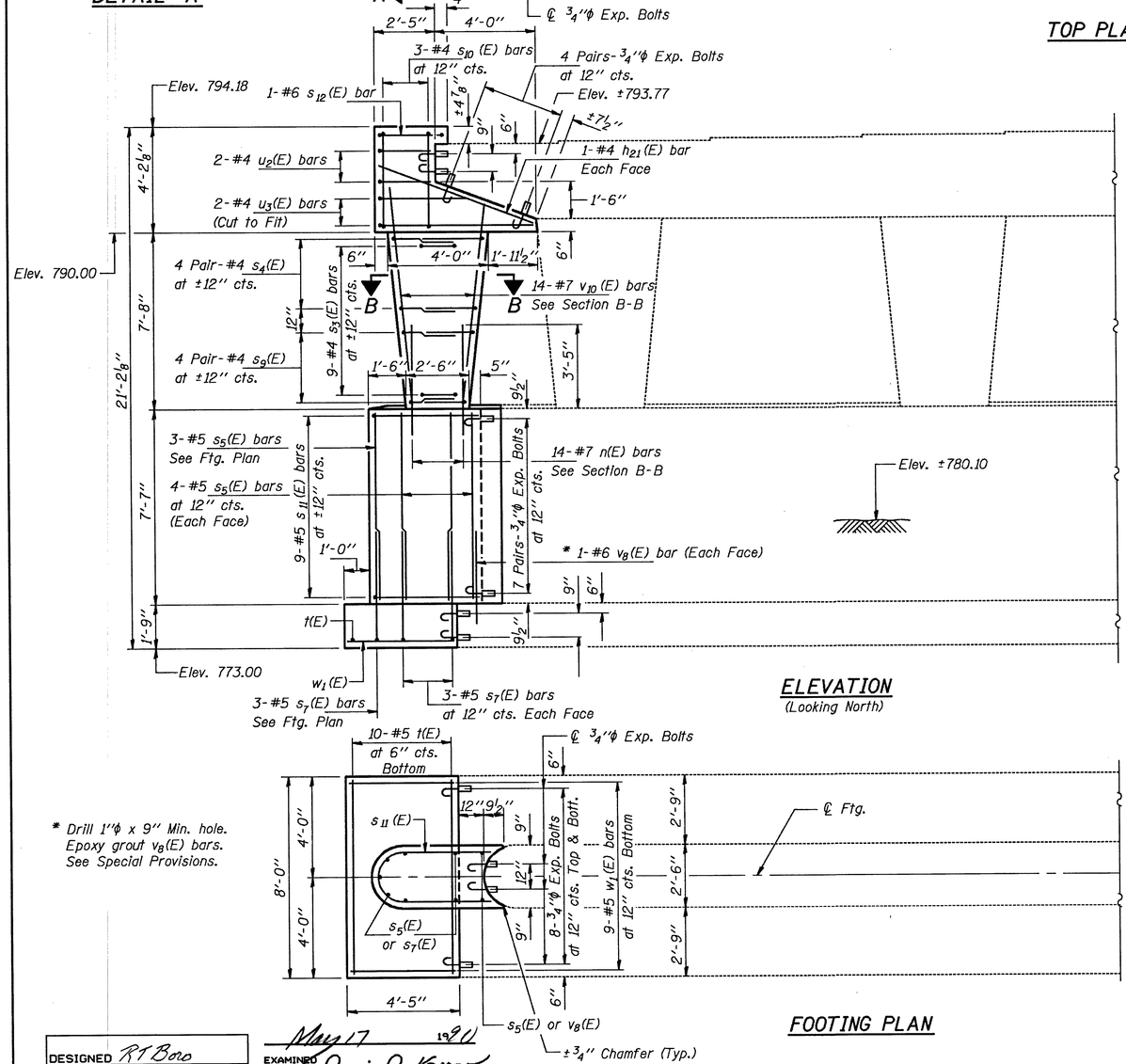

ELEVATION
(Looking North)

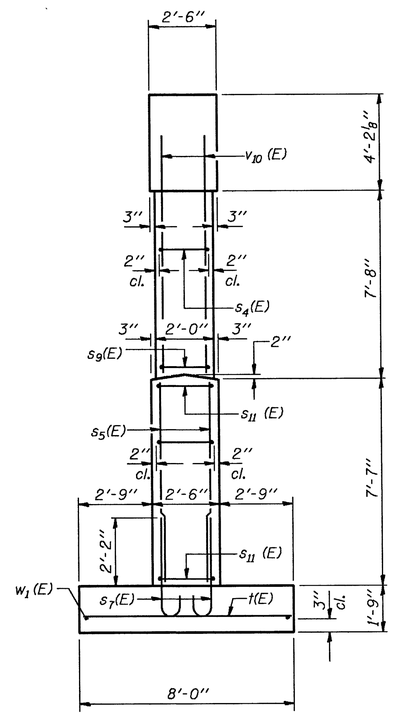

END VIEW

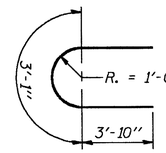

BAR s11 (E)

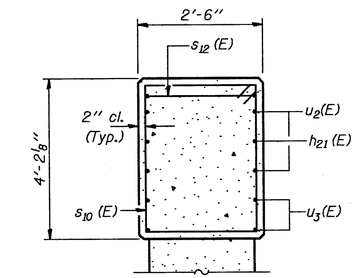

SECTION A-A

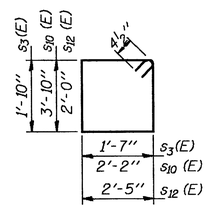

BARS s3(E), s10 (E) & s12 (E)

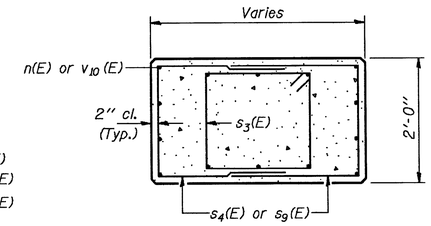

SECTION B-B

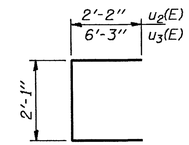

BARS u2(E) & u3(E)

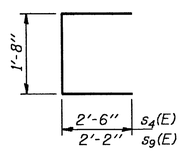

BARS s4(E) & s9(E)

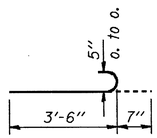

BAR s7(E)

BILL OF MATERIAL

Bar	No.	Size	Length	Shape
h21(E)	2	#4	6'-7"	
n(E)	14	#7	6'-10"	
s3(E)	9	#4	7'-7"	
s4(E)	8	#4	6'-8"	
s5(E)	11	#5	7'-4"	
s7(E)	9	#5	4'-1"	
s9(E)	8	#4	6'-0"	
s10 (E)	3	#4	12'-9"	
s11 (E)	9	#5	10'-9"	
s12 (E)	1	#6	9'-7"	
t(E)	10	#5	7'-9"	
u2(E)	2	#4	6'-5"	
u3(E)	2	#4	14'-7"	
v8(E)	2	#6	3'-6"	
v10 (E)	14	#7	9'-9"	
w1(E)	9	#5	4'-2"	
Structure Excavation			Cu. Yd.	26
Class X Concrete			Cu. Yd.	8.6
Reinforcement Bars, Epoxy Coated			Lbs.	1020
Expansion Bolts, ¾"ϕ			Each	42

Reinforcement Bars designated (E) shall be epoxy coated.

* Drill 1"ϕ x 9" Min. hole. Epoxy grout v8(E) bars. See Special Provisions.

FOOTING PLAN

Max. Allowable Footing Pressure = 3.5 T.S.F.

Notes:
Space reinforcement in cap to miss anchor bolts.
All edges shall have standard ¾" chamfers except as noted.
Pour step monolithically with cap.
For anchor bolt installation details see sheet #34 of 52.
For existing bearings anchor bolts extension and plate details see sheet #33 of 52.
All construction joints between existing and new concrete shall be bonded construction joints in accordance with Art. 504.13 (a)(2) of the Standard Specifications.

DESIGNED	R.T. Boro
CHECKED	Sheila E. Moynihan
DRAWN	R. Doty
CHECKED	RTB SEM

May 17 1991
EXAMINED Jaj. J. Kaspar
ENGINEER OF BRIDGE DESIGN
PASSED Ralph E. Anderson
ENGINEER OF BRIDGES AND STRUCTURES
APPROVED
DIRECTOR OF HIGHWAYS

PIER 2
WEST BOUND LANES
F.A.I. RT. 39 SEC. 5HBD
WINNEBAGO COUNTY
STA. 872+39.77

STATE OF ILLINOIS
DEPARTMENT OF TRANSPORTATION

ROUTE NO.	SECTION	COUNTY	TOTAL SHEETS	SHEET NO.
S.B.I. F.A.I. 39	5HBD	WINNEBAGO	171	151
FED. ROAD DIST. NO. 7	ILLINOIS	FED. AID PROJECT-		

SHEET NO. 45
52 SHEETS

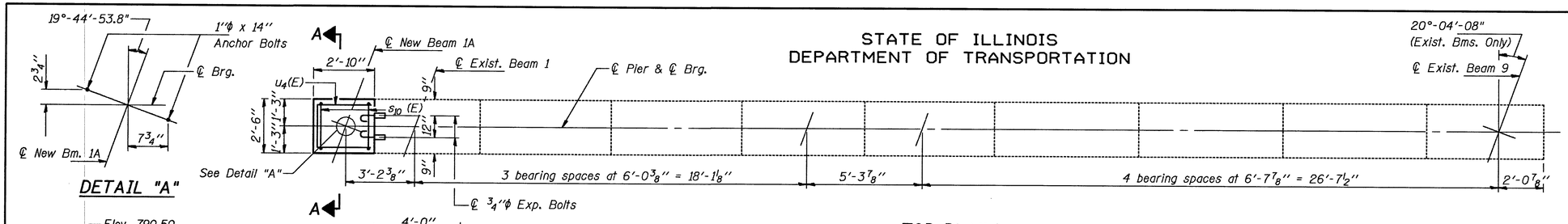

DETAIL "A"

TOP PLAN

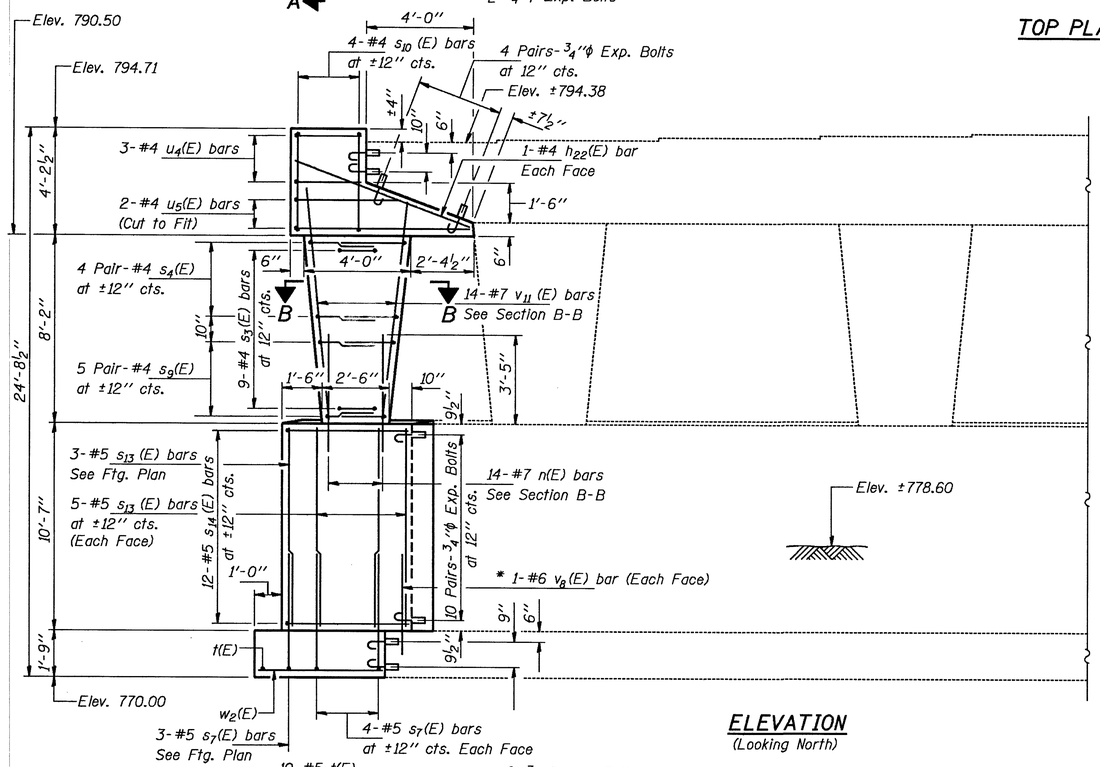

ELEVATION
(Looking North)

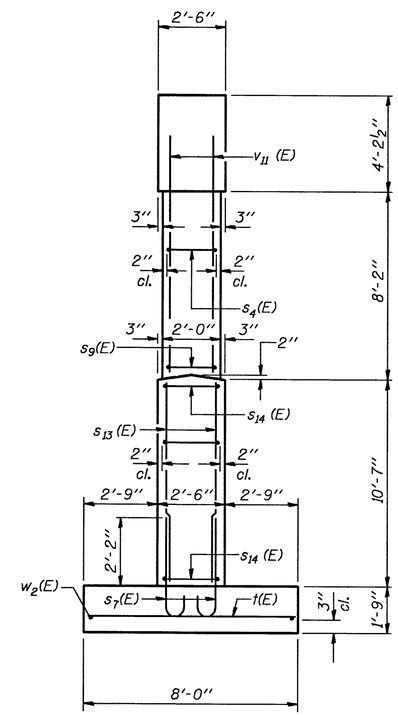

END VIEW

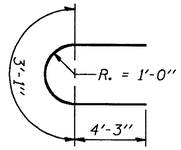

BAR s14 (E)

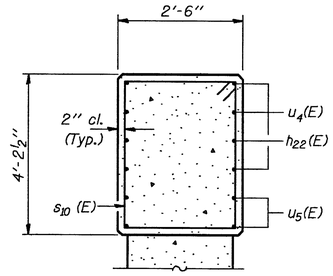

SECTION A-A

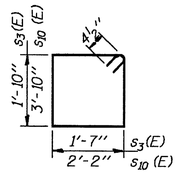

BARS s3(E) & s10 (E)

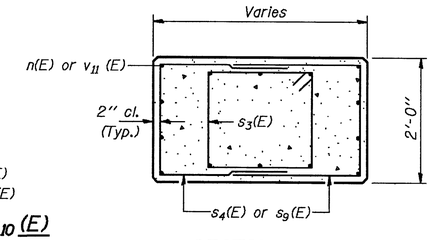

SECTION B-B

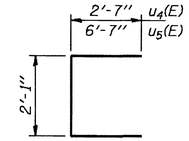

BARS u4(E) & u5(E)

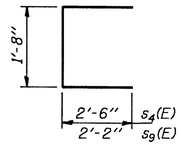

BARS s4(E) & s9(E)

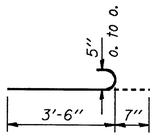

BAR s7(E)

BILL OF MATERIAL

Bar	No.	Size	Length	Shape
h22(E)	2	#4	7'-1"	
n(E)	14	#7	6'-10"	
s3(E)	9	#4	7'-7"	
s4(E)	8	#4	6'-8"	
s7(E)	11	#5	4'-1"	
s9(E)	10	#4	6'-0"	
s10 (E)	4	#4	12'-9"	
s13 (E)	13	#5	10'-4"	
s14 (E)	12	#5	11'-7"	
t(E)	10	#5	7'-9"	
u4(E)	3	#4	7'-3"	
u5(E)	2	#4	15'-3"	
v8(E)	2	#6	3'-6"	
v11 (E)	14	#7	10'-3"	
w2(E)	9	#5	4'-7"	
Structure Excavation			Cu. Yd.	35
Class X Concrete			Cu. Yd.	10.7
Reinforcement Bars, Epoxy Coated			Lbs.	1180
Expansion Bolts, ¾"φ			Each	48

Reinforcement Bars designated (E) shall be epoxy coated.

* Drill 1"φ x 9" Min. hole. Epoxy grout v8(E) bars. See Special Provisions.

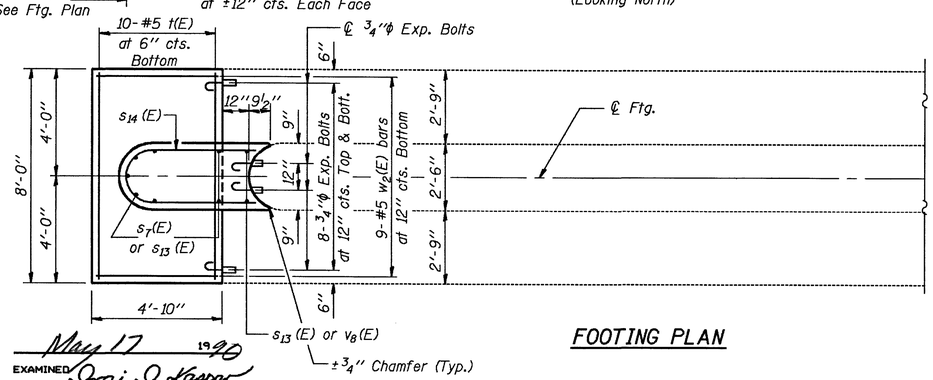

FOOTING PLAN

Notes: Space reinforcement in cap to miss anchor bolts.
All edges shall have standard ¾" chamfers except as noted.
Pour step monolithically with cap.
For anchor bolt installation details see sheet #34 of 52.
For existing bearings anchor bolts extension and plate details see sheet #33 of 52.
All construction joints between existing and new concrete shall be bonded construction joints in accordance with Art. 504.13 (a)(2) of the Standard Specifications.

Max. Allowable Footing Pressure = 3.0 T.S.F.

DESIGNED	RT Boro
CHECKED	Sheila E. Morgenhan
DRAWN	R. Doty
CHECKED	RTB SEM

May 17 1990
EXAMINED Greg J. Kaspar — ENGINEER OF BRIDGE DESIGN
PASSED Ralph E. Anderson — ENGINEER OF BRIDGES AND STRUCTURES
APPROVED — DIRECTOR OF HIGHWAYS

PIER 3
WEST BOUND LANES
F.A.I. RT. 39 SEC. 5HBD
WINNEBAGO COUNTY
STA. 872+39.77

STATE OF ILLINOIS
DEPARTMENT OF TRANSPORTATION

ROUTE NO.	SECTION	COUNTY	TOTAL SHEETS	SHEET NO.
S. B. I. F. A. I. 39	5HBD	WINNEBAGO	171	152
FED. ROAD DIST. NO. 7	ILLINOIS	FED. AID PROJECT-		

SHEET NO. 46
52 SHEETS

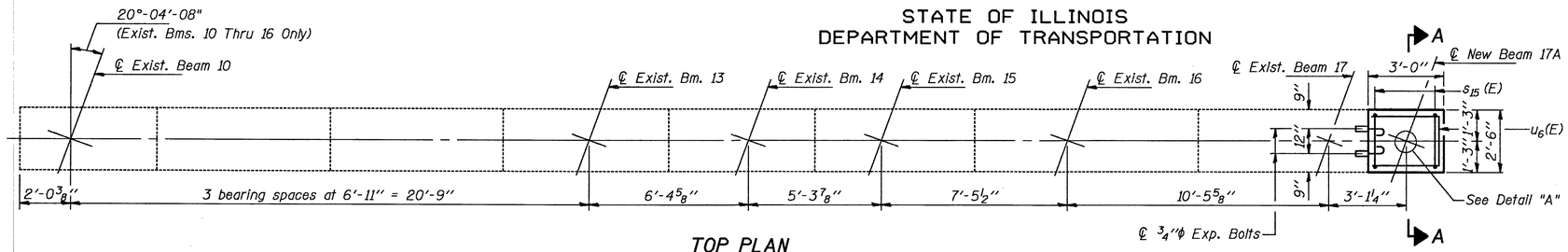

TOP PLAN

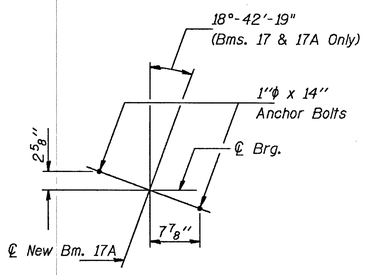

DETAIL "A"

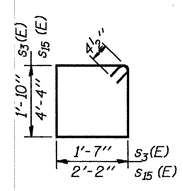

BARS s_3(E) & s_{15} (E)

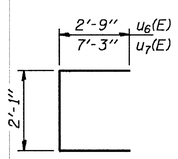

BARS u_6(E) & u_7(E)

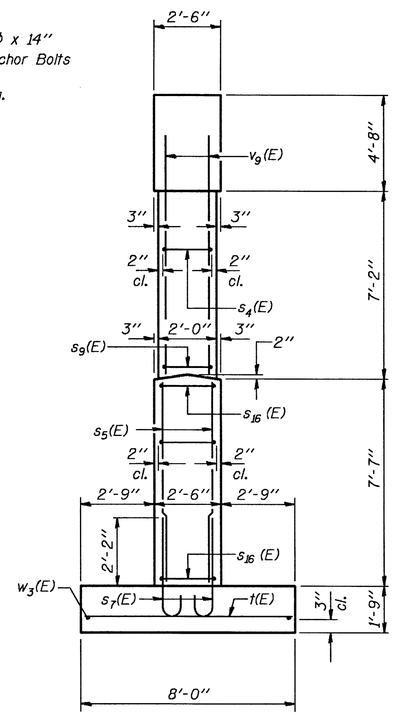

END VIEW

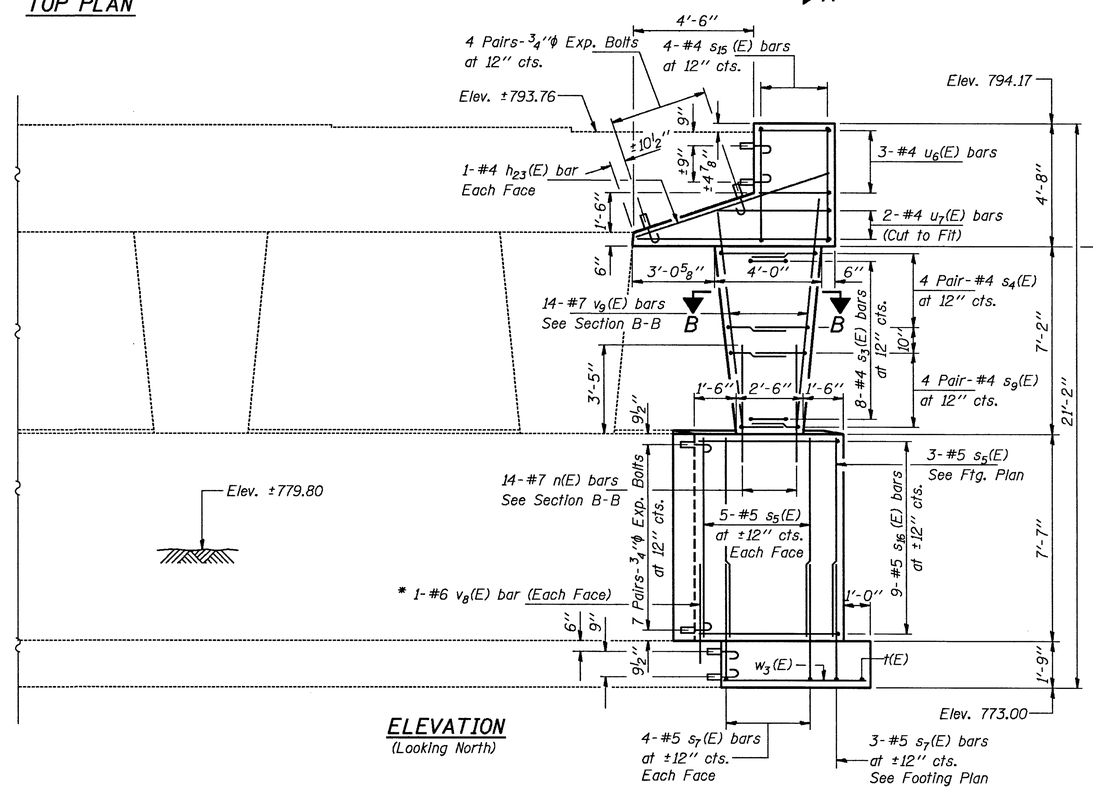

ELEVATION
(Looking North)

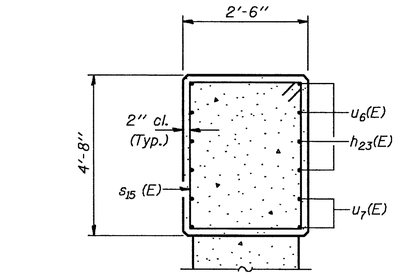

SECTION A-A

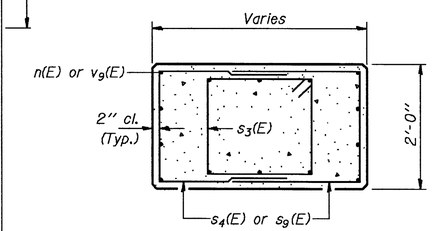

SECTION B-B

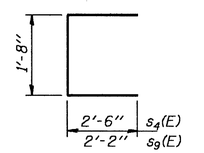

BARS s_4(E) & s_9(E)

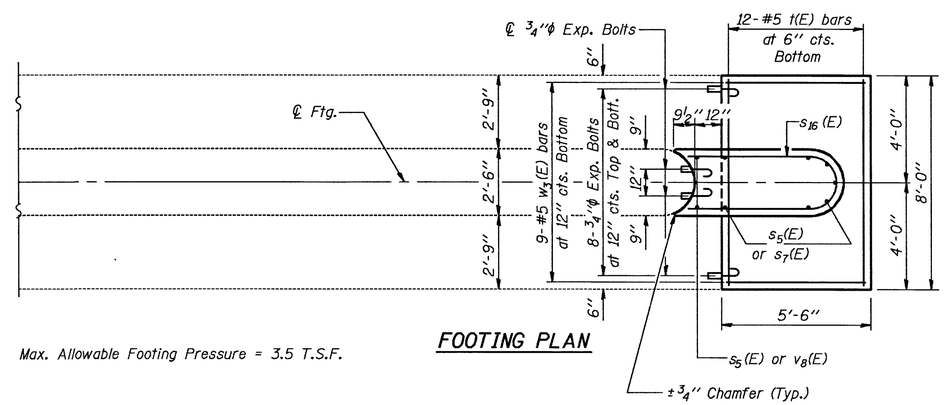

FOOTING PLAN

Max. Allowable Footing Pressure = 3.5 T.S.F.

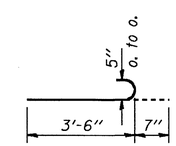

BAR s_7(E)

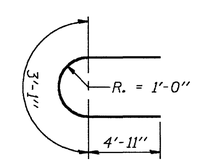

BAR s_{16} (E)

BILL OF MATERIAL

Bar	No.	Size	Length	Shape
h_{23}(E)	2	#4	7'-8"	
n(E)	14	#7	6'-10"	
s_3(E)	8	#4	7'-7"	
s_4(E)	8	#4	6'-8"	
s_5(E)	13	#5	7'-4"	
s_7(E)	11	#5	4'-1"	
s_9(E)	8	#4	6'-0"	
s_{15}(E)	4	#4	13'-9"	
s_{16}(E)	9	#5	12'-11"	
t(E)	12	#5	7'-9"	
u_6(E)	3	#4	7'-7"	
u_7(E)	2	#4	16'-7"	
v_8(E)	2	#6	3'-6"	
v_9(E)	14	#7	9'-3"	
w_3(E)	9	#5	5'-3"	
Structure Excavation			Cu. Yd.	30
Class X Concrete			Cu. Yd.	10.2
Reinforcement Bars, Epoxy Coated			Lbs.	1080
Expansion Bolts, 3/4"φ			Each	42

Reinforcement Bars designated (E) shall be epoxy coated.

Notes: Space reinforcement in cap to miss anchor bolts.
All edges shall have standard 3/4" chamfers except as noted.
Pour step monolithically with cap.
For anchor bolt installation details see sheet #34 of 52.
For existing bearings anchor bolts extension and plate details see sheet #33 of 52.
All construction joints between existing and new concrete shall be bonded construction joints in accordance with Art. 504.13 (a)(2) of the Standard Specifications.

* Drill 1"φ x 9" Min. hole. Epoxy grout v_8(E) bars. See Special Provisions.

DESIGNED	RTBoza
CHECKED	Sheila E. Mozynskow
DRAWN	R. Doty
CHECKED	RTB SEM

May 17 1990
EXAMINED Roger D. Kaspar
ENGINEER OF BRIDGE DESIGN
PASSED Ralph E. Anderson
ENGINEER OF BRIDGES AND STRUCTURES
APPROVED
DIRECTOR OF HIGHWAYS

PIER 1
EAST BOUND LANES
F.A.I. RT. 39 SEC. 5HBD
WINNEBAGO COUNTY
STA. 872+39.77

STATE OF ILLINOIS
DEPARTMENT OF TRANSPORTATION

ROUTE NO.	SECTION	COUNTY	TOTAL SHEETS	SHEET NO.
S. B. I. R. A. I. 39	5HBD	WINNEBAGO	171	153
FED. ROAD DIST. NO. 7		ILLINOIS	FED. AID PROJECT-	

SHEET NO. 47
52 SHEETS

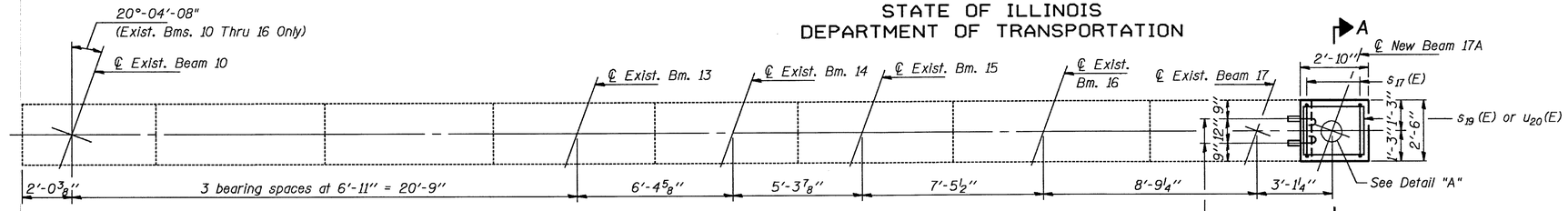

TOP PLAN

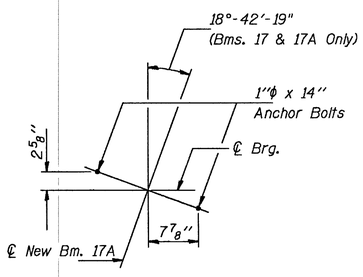

DETAIL "A"

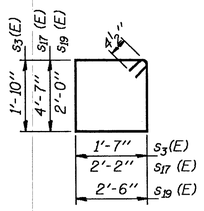

BARS s_3(E), s_{17} (E) & s_{19} (E)

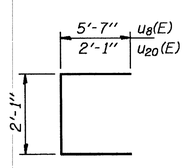

BARS u_8(E) & u_{20}(E)

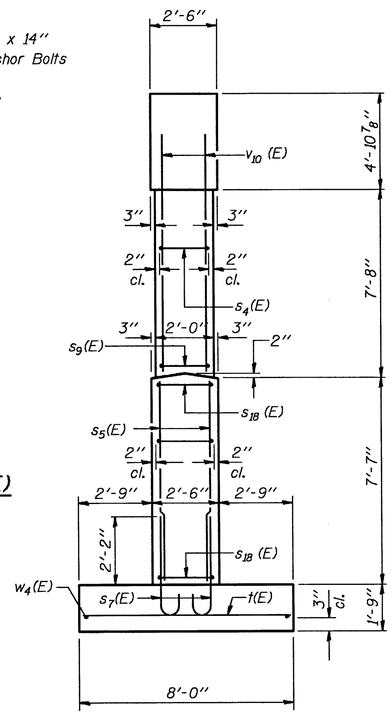

END VIEW

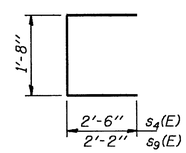

BARS s_4(E) & s_9(E)

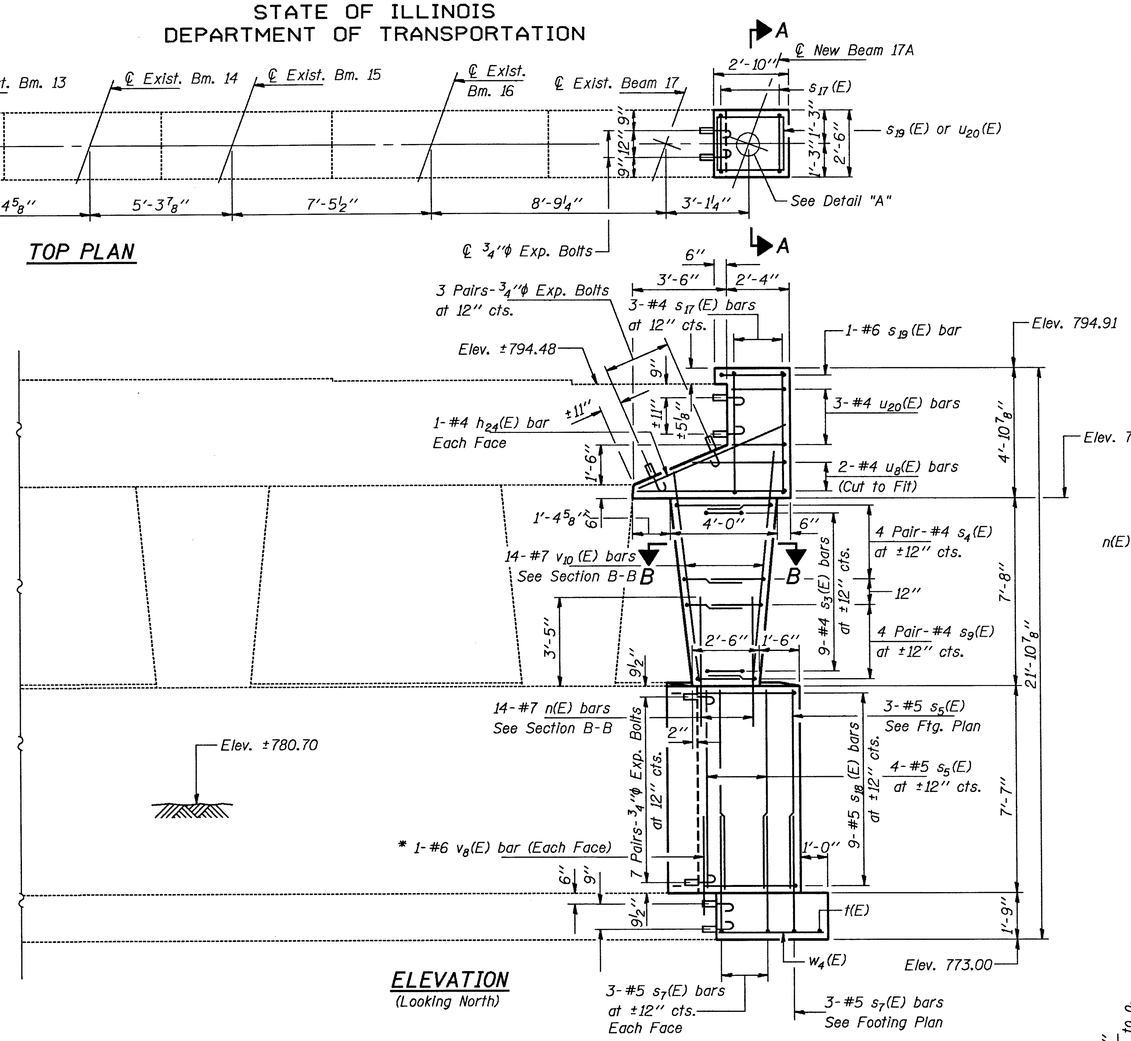

ELEVATION
(Looking North)

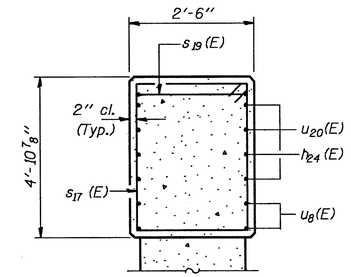

SECTION A-A

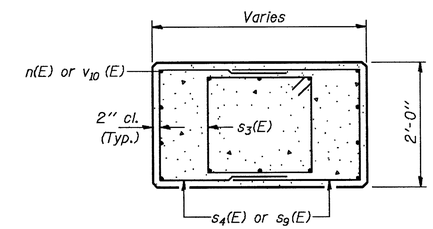

SECTION B-B

BILL OF MATERIAL

Bar	No.	Size	Length	Shape
h_{24}(E)	2	#4	6'-7"	
n(E)	14	#7	6'-10"	
s_3(E)	9	#4	7'-7"	
s_4(E)	8	#4	6'-8"	
s_5(E)	11	#5	7'-4"	
s_7(E)	9	#5	4'-1"	
s_9(E)	8	#4	6'-0"	
s_{17} (E)	3	#4	14'-3"	
s_{18} (E)	9	#5	9'-7"	
s_{19} (E)	1	#6	9'-9"	
t(E)	8	#5	7'-9"	
u_8(E)	2	#4	13'-3"	
u_{20}(E)	3	#4	6'-3"	
v_8(E)	2	#6	3'-6"	
v_{10} (E)	14	#7	9'-9"	
w_4(E)	9	#5	3'-7"	
Structure Excavation			Cu. Yd.	26
Class X Concrete			Cu. Yd.	8.1
Reinforcement Bars, Epoxy Coated			Lbs.	990
Expansion Bolts, 3/4"ϕ			Each	40

Reinforcement Bars designated (E) shall be epoxy coated.

Notes: Space reinforcement in cap to miss anchor bolts.
All edges shall have standard 3/4" chamfers except as noted.
Pour step monolithically with cap.
For anchor bolt installation details see sheet #34 of 52.
For existing bearings anchor bolts extension and plate details see sheet #33 of 34.
All construction joints between existing and new concrete shall be bonded construction joints in accordance with Art. 504.13 (a)(2) of the Standard Specifications.

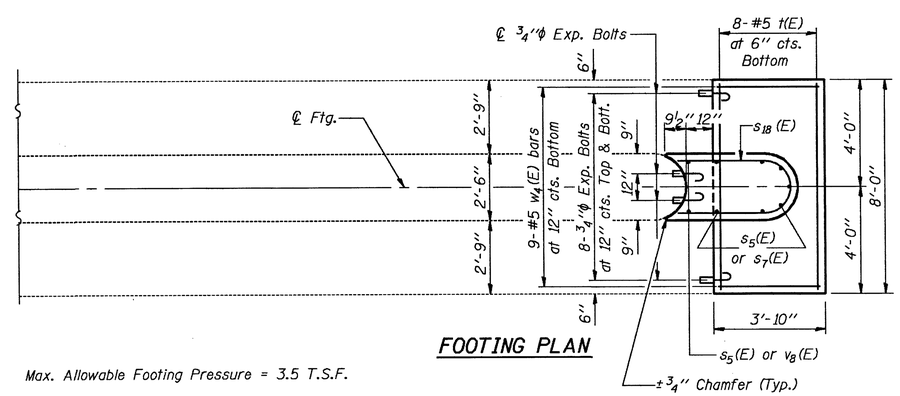

FOOTING PLAN

Max. Allowable Footing Pressure = 3.5 T.S.F.

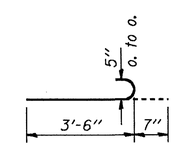

BAR s_7(E)

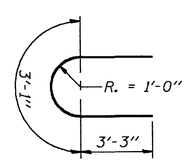

BAR s_{18} (E)

* Drill 1"ϕ x 9" Min. hole. Epoxy grout v_8(E) bars. See Special Provisions.

DESIGNED	RT Boro
CHECKED	Sheila E. Moynihan
DRAWN	R. Doty
CHECKED	RTB SEM

May 17 1996
EXAMINED Raj. D. Kaspar
ENGINEER OF BRIDGE DESIGN
PASSED Ralph E. Anderson
ENGINEER OF BRIDGES AND STRUCTURES
APPROVED
DIRECTOR OF HIGHWAYS

PIER 2
EAST BOUND LANES
F.A.I. RT. 39 SEC. 5HBD
WINNEBAGO COUNTY
STA. 872+39.77

ROUTE NO.	SECTION	COUNTY	TOTAL SHEETS	SHEET NO.
S.B.I. F.A.I. 39	5HBD	WINNEBAGO	171	154
FED. ROAD DIST. NO. 7	ILLINOIS	FED. AID PROJECT-		

SHEET NO. 48
52 SHEETS

STATE OF ILLINOIS
DEPARTMENT OF TRANSPORTATION

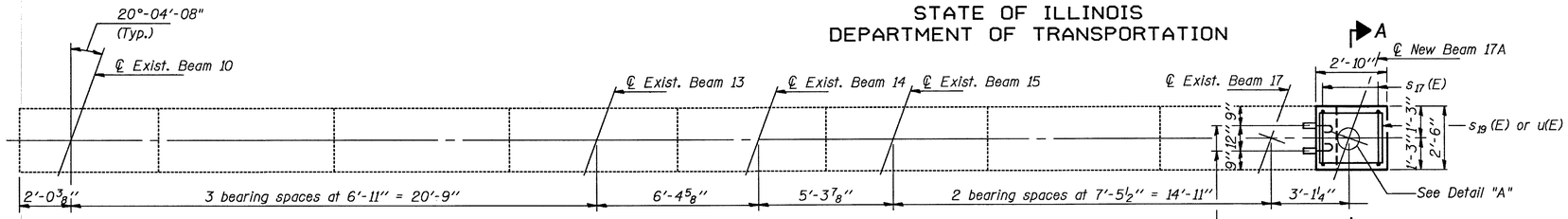

TOP PLAN

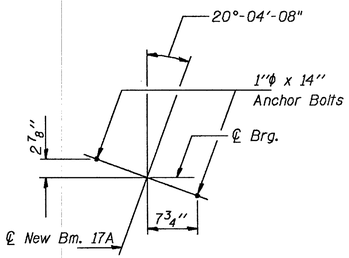

DETAIL "A"

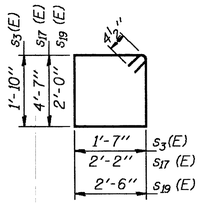

BARS s_3(E), s_{17} (E) & s_{19} (E)

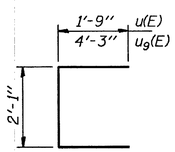

BARS u(E) & u_9(E)

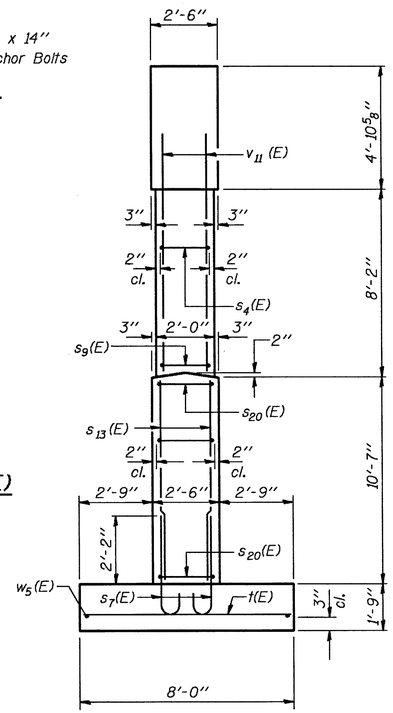

END VIEW

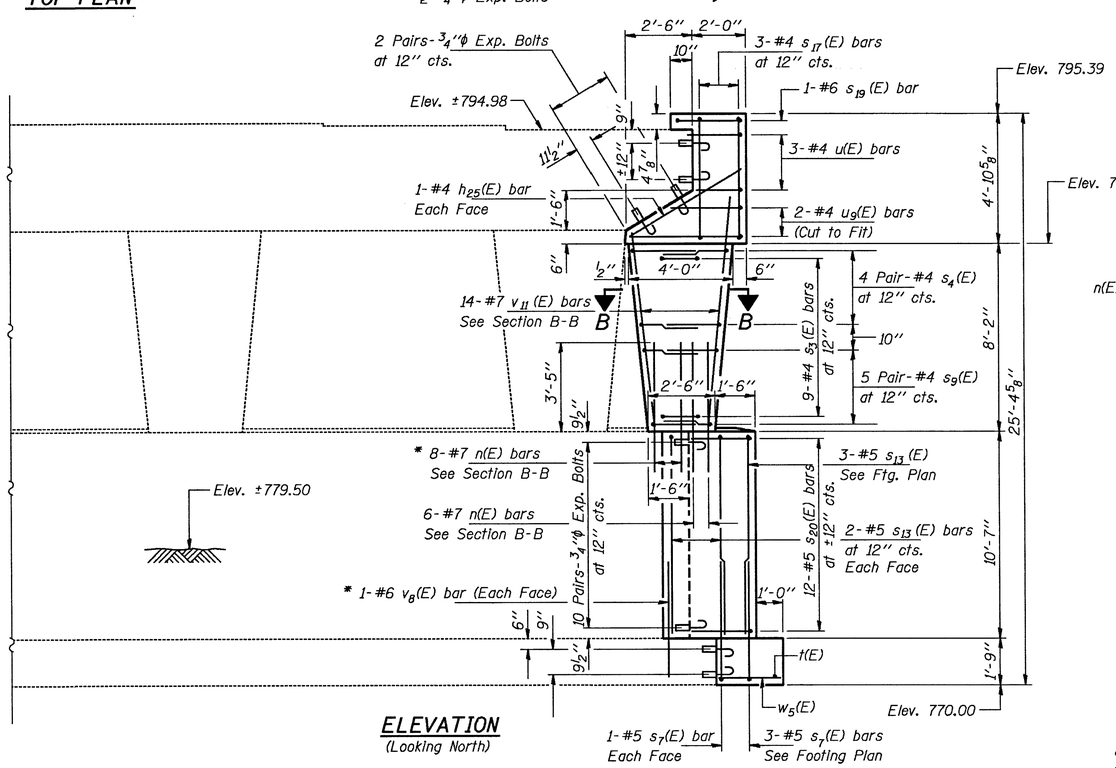

ELEVATION
(Looking North)

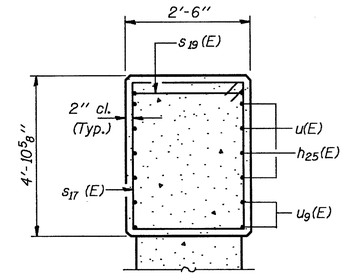

SECTION A-A

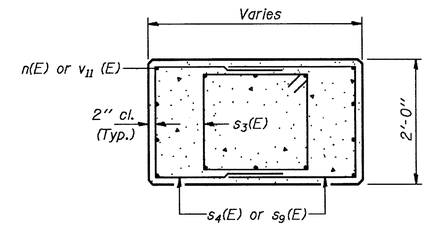

SECTION B-B

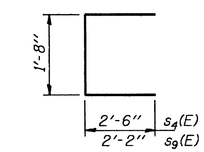

BARS s_4(E) & s_9(E)

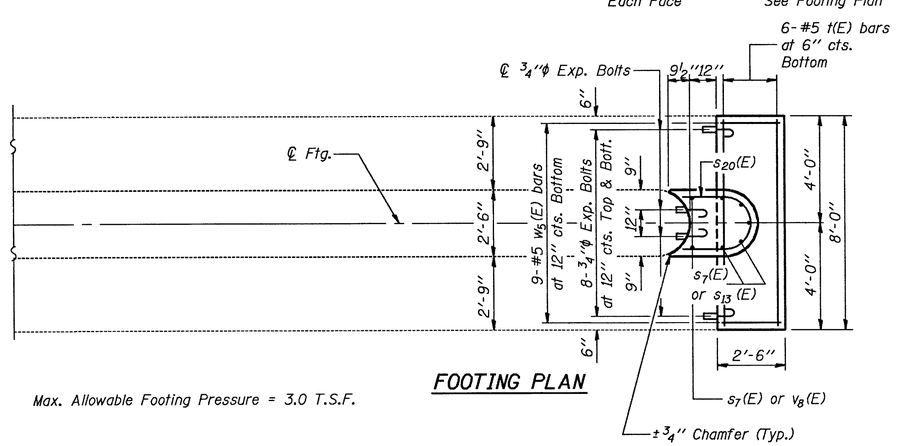

FOOTING PLAN

Max. Allowable Footing Pressure = 3.0 T.S.F.

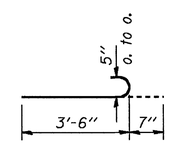

BAR s_7(E)

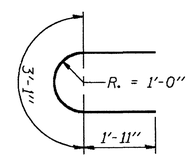

BAR s_{20}(E)

Notes: Space reinforcement in cap to miss anchor bolts.
All edges shall have standard 3/4" chamfers except as noted.
Pour step monolithically with cap.
For anchor bolt installation details see sheet #34 of 52.
For existing bearings anchor bolts extension and plate details see sheet #33 of 52.
All construction joints between existing and new concrete shall be bonded construction joints in accordance with Art. 504.13 (a)(2) of the Standard Specifications.

* Drill 1"φ x 9" Min. hole and epoxy grout v_8(E) bars.
Drill 1 1/8"φ x 9" Min. hole and epoxy grout n(E) bars.
See Special Provisions.

BILL OF MATERIAL

Bar	No.	Size	Length	Shape
h_{25}(E)	2	#4	5'-11"	
n(E)	14	#7	6'-10"	
s_3(E)	9	#4	7'-7"	
s_4(E)	8	#4	6'-8"	
s_7(E)	5	#5	4'-1"	
s_9(E)	10	#4	6'-0"	
s_{13}(E)	7	#5	10'-4"	
s_{17}(E)	3	#4	14'-3	
s_{19}(E)	1	#6	9'-9"	
s_{20}(E)	12	#5	6'-11"	
t(E)	6	#5	7'-9"	
u(E)	3	#4	5'-7"	
u_9(E)	2	#4	10'-7"	
v_8(E)	2	#6	3'-6"	
v_{11}(E)	14	#7	10'-3	
w_5(E)	9	#5	2'-3"	
Structure Excavation			Cu. Yd.	28
Class X Concrete			Cu. Yd.	6.9
Reinforcement Bars, Epoxy Coated			Lbs.	950
Expansion Bolts, 3/4"φ			Each	44

Reinforcement Bars designated (E) shall be epoxy coated.

DESIGNED	RTBoro
CHECKED	Sheila E. Magnuson
DRAWN	R. Doty
CHECKED	RTB SEM

May 17 1990
EXAMINED Greg J. Kaspar — ENGINEER OF BRIDGE DESIGN
PASSED Ralph E. Anderson — ENGINEER OF BRIDGES AND STRUCTURES
APPROVED — DIRECTOR OF HIGHWAYS

PIER 3
EAST BOUND LANES
F.A.I. RT. 39 SEC. 5HBD
WINNEBAGO COUNTY
STA. 872+39.77

STATE OF ILLINOIS
DEPARTMENT OF TRANSPORTATION

ROUTE NO.	SECTION	COUNTY	TOTAL SHEETS	SHEET NO.
S.B.I. F.A.I. 39	5HBD	WINNEBAGO	171	155
FED. ROAD DIST. NO. 7		ILLINOIS	FED. AID PROJECT-	

SHEET NO. 49
52 SHEETS

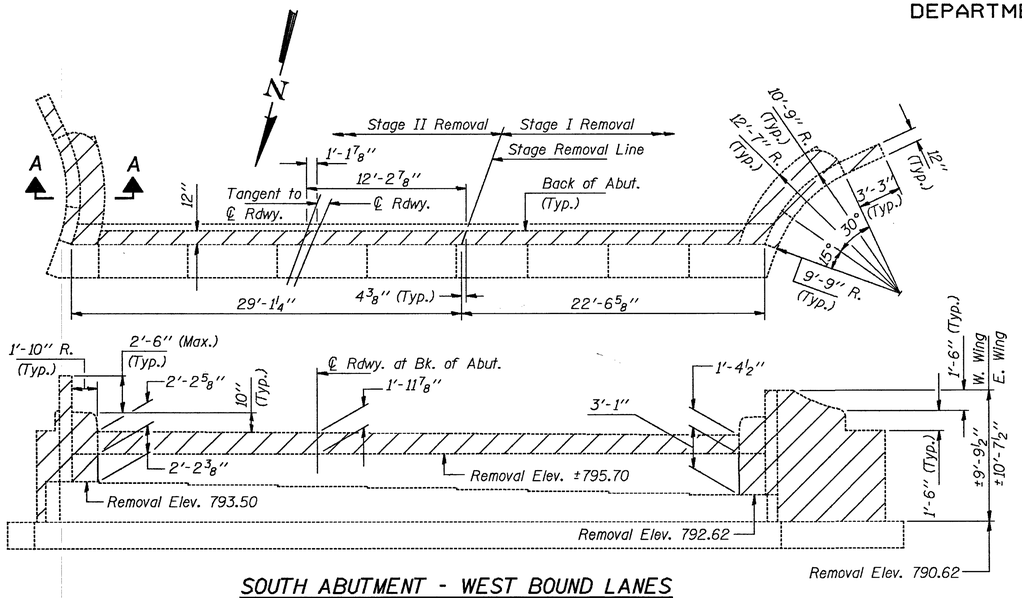

SOUTH ABUTMENT - WEST BOUND LANES
(Looking South)

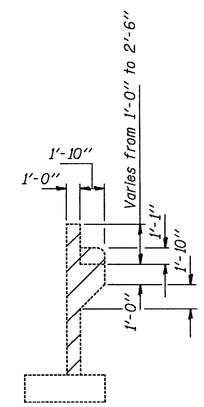

SECTION A-A

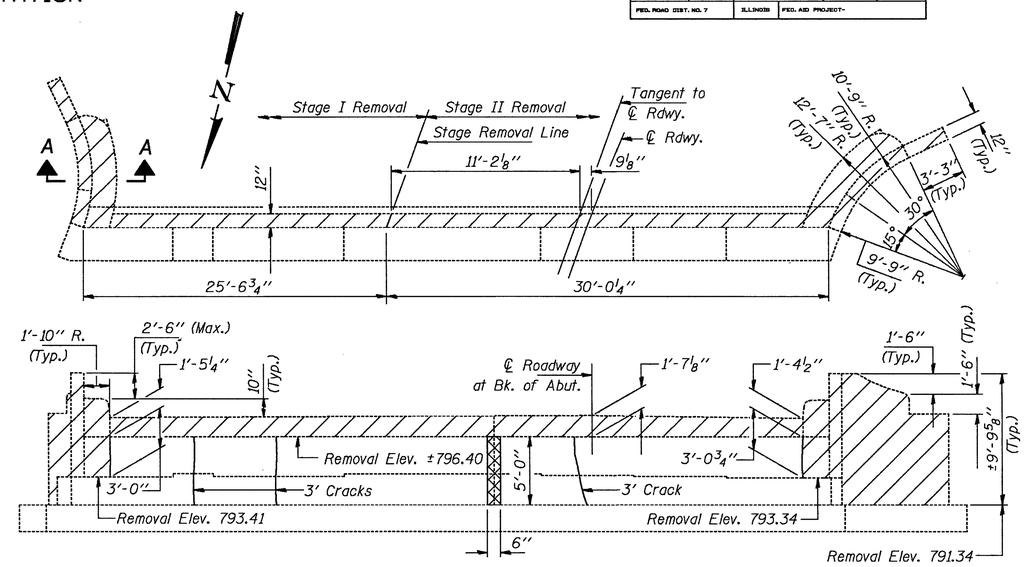

SOUTH ABUTMENT - EAST BOUND LANES
(Looking South)

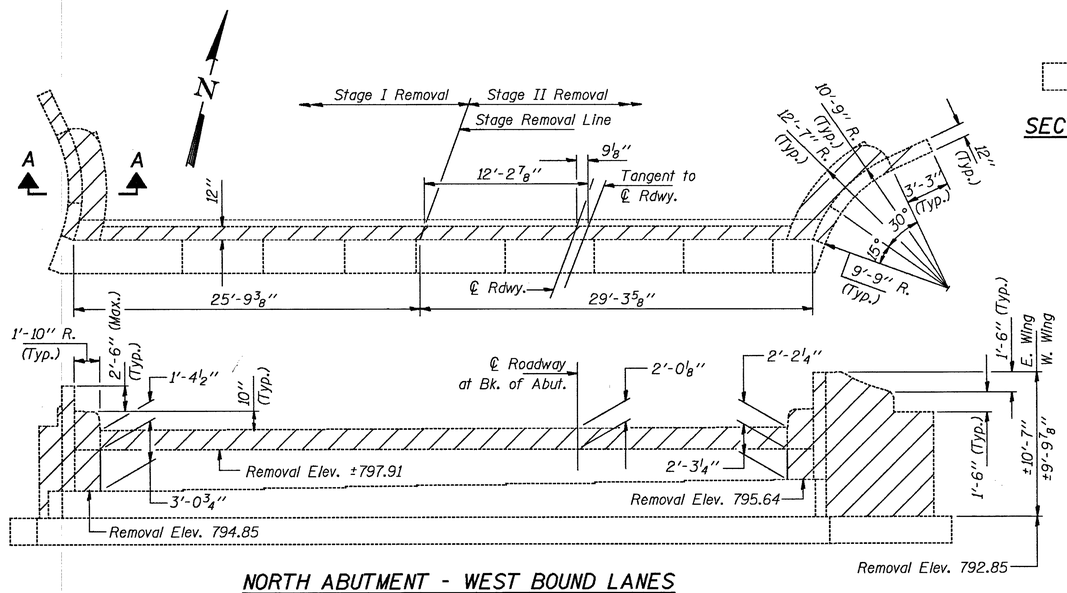

NORTH ABUTMENT - WEST BOUND LANES
(Looking North)

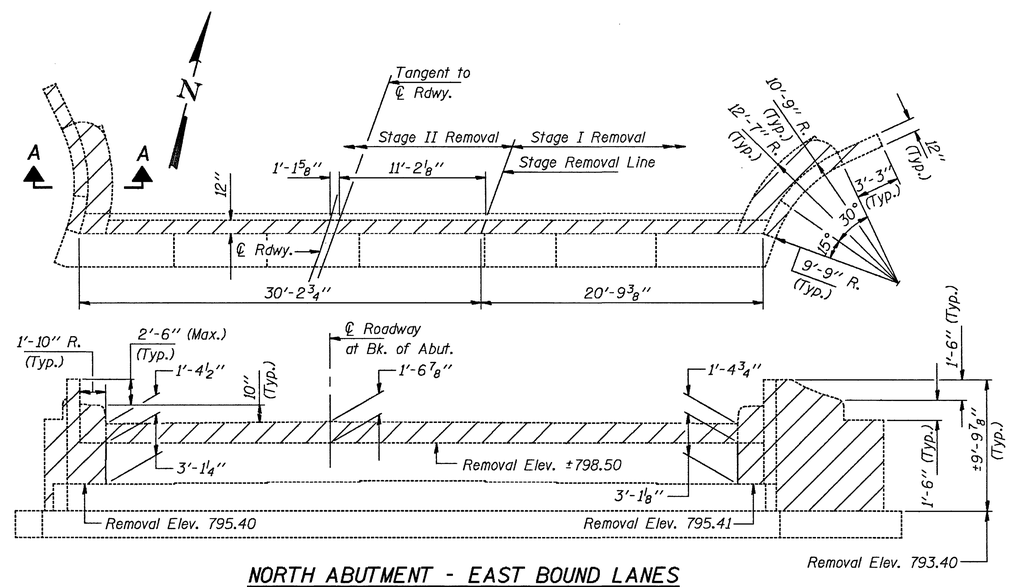

NORTH ABUTMENT - EAST BOUND LANES
(Looking North)

DESIGNED	RTBoro
CHECKED	Shah E. Moynihan
DRAWN	R. Doty
CHECKED	RTB SEM

May 17 1990
EXAMINED Jaj. O. Kaspar — ENGINEER OF BRIDGE DESIGN
PASSED Ralph E. Anderson — ENGINEER OF BRIDGES AND STRUCTURES
APPROVED — DIRECTOR OF HIGHWAYS

Notes: Hatched areas indicate "Concrete Removal."
Reinforcement bars extending into removed areas shall be cleaned, straightened and incorporated into the new construction.
Cross hatched areas indicate "Repair Concrete Structures."

BILL OF MATERIAL

Item	Unit	S. Abut. (E.B.L.)
Repair Concrete Structures	Sq. Ft.	~~3~~ 0
Epoxy Crack Sealing	Lin. Ft.	~~9~~ 0

CONCRETE REMOVAL AND ABUTMENT REPAIR DETAILS
F.A.I. RT. 39 SEC. 5HBD
WINNEBAGO COUNTY
STA. 872+39.77

STATE OF ILLINOIS
DEPARTMENT OF TRANSPORTATION

ROUTE NO.	SECTION	COUNTY	TOTAL SHEETS	SHEET NO.
S.B.I. F.A.I. 39	5HBD	WINNEBAGO	171	156
FED. ROAD DIST. NO. 7		ILLINOIS	FED. AID PROJECT-	

SHEET NO. 50
52 SHEETS

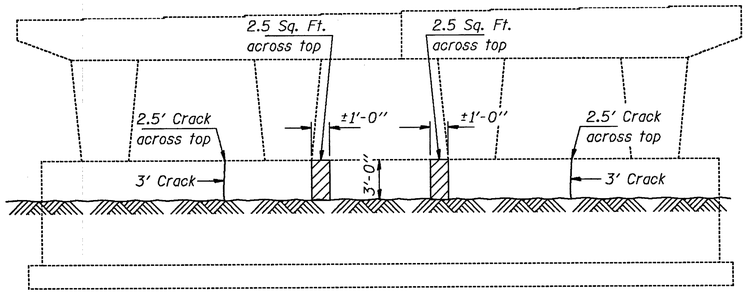

ELEVATION - PIER #1
(Looking North)

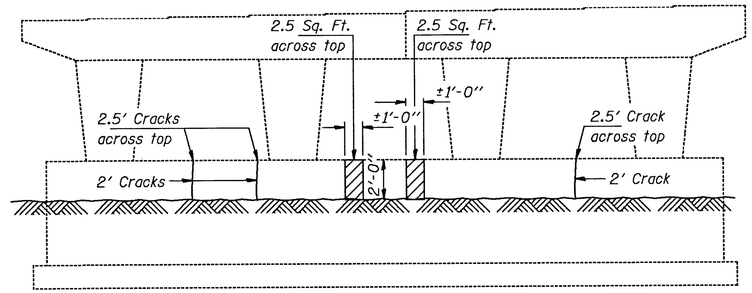

ELEVATION - PIER #2
(Looking North)

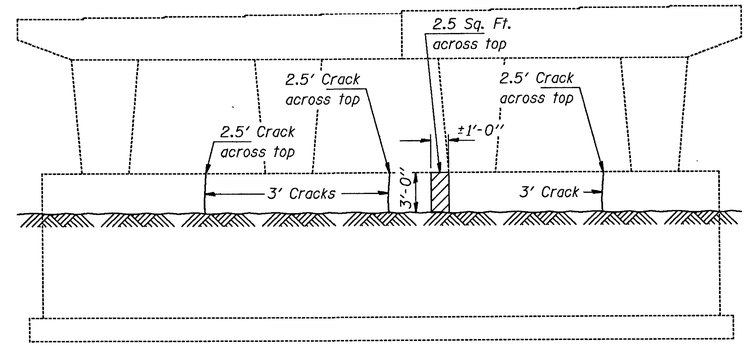

ELEVATION - PIER #3
(Looking North)

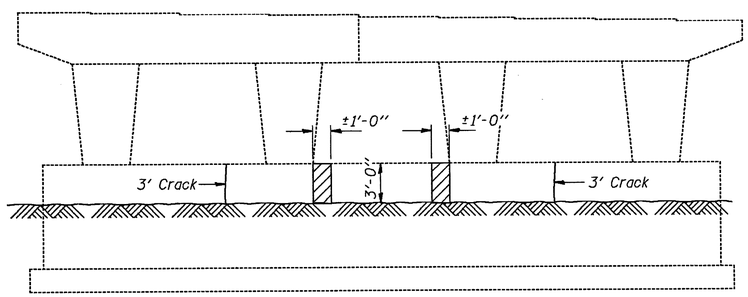

ELEVATION - PIER #1
(Looking South)

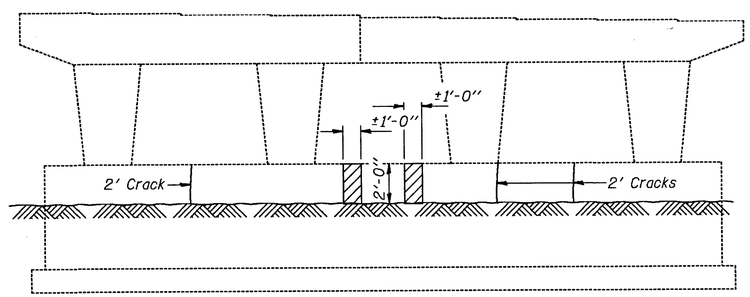

ELEVATION - PIER #2
(Looking South)

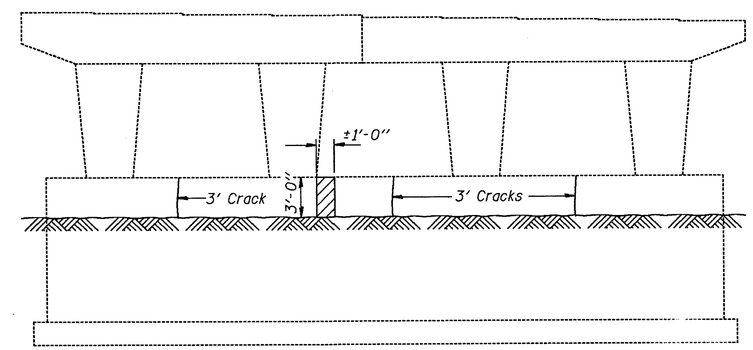

ELEVATION - PIER #3
(Looking South)

Note: Hatched areas indicate "Repair Concrete Structures."

BILL OF MATERIAL

Item	Unit	Pier #1	Pier #2	Pier #3
Repair Concrete Structures	Sq. Ft.	~~17~~ 13.4	~~13~~ 9.8	~~9~~ 8.5
Epoxy Crack Sealing	Lin. Ft.	~~17~~ 24.6	~~28~~ 26.1	~~26~~ 41.4

DESIGNED	R.T. Boro
CHECKED	Shiela E. Magnuson
DRAWN	R. Doty
CHECKED	R.T.B.

May 17 1990
EXAMINED Jerry D. Kaspar
ENGINEER OF BRIDGE DESIGN
PASSED Ralph E. Anderson
ENGINEER OF BRIDGES AND STRUCTURES
APPROVED
DIRECTOR OF HIGHWAYS

PIER REPAIR DETAILS
WEST BOUND LANES
F.A.I. RT. 39 SEC. 5HBD
WINNEBAGO COUNTY
STA. 872+39.77

STATE OF ILLINOIS
DEPARTMENT OF TRANSPORTATION

ROUTE NO.	SECTION	COUNTY	TOTAL SHEETS	SHEET NO.
S.B.I. F.A.I. 39	5HBD	WINNEBAGO	171	157
FED. ROAD DIST. NO. 7		ILLINOIS	FED. AID PROJECT-	

SHEET NO. 51
52 SHEETS

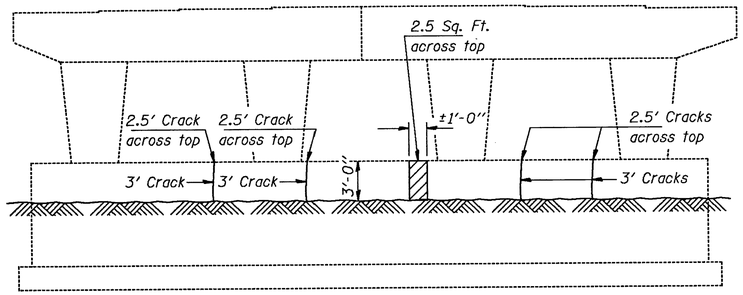

ELEVATION - PIER #1
(Looking North)

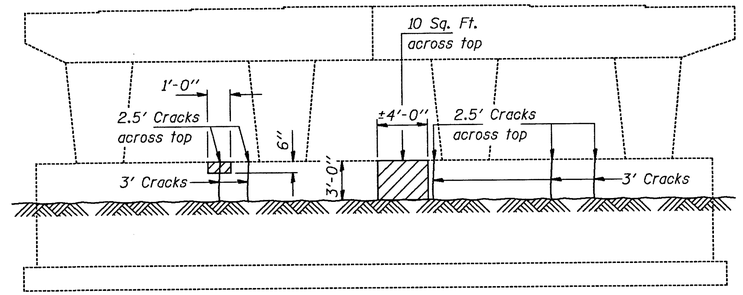

ELEVATION - PIER #2
(Looking North)

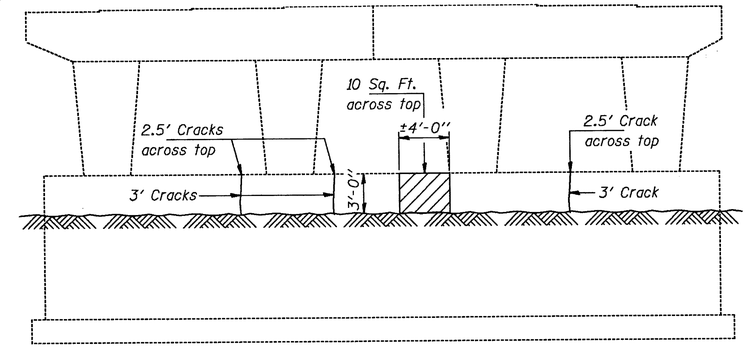

ELEVATION - PIER #3
(Looking North)

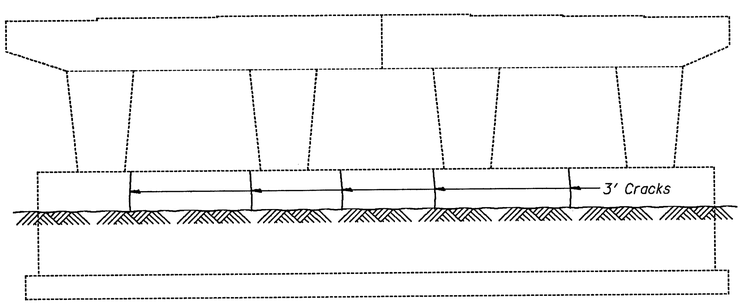

ELEVATION - PIER #1
(Looking South)

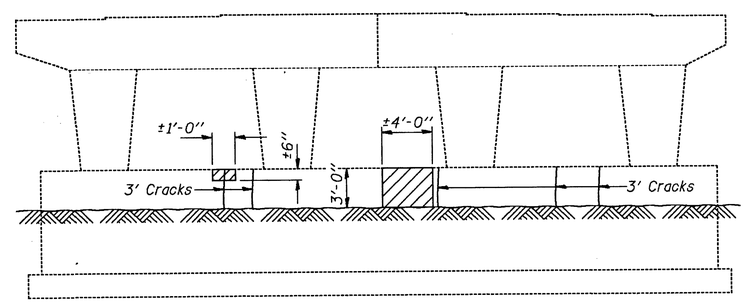

ELEVATION - PIER #2
(Looking South)

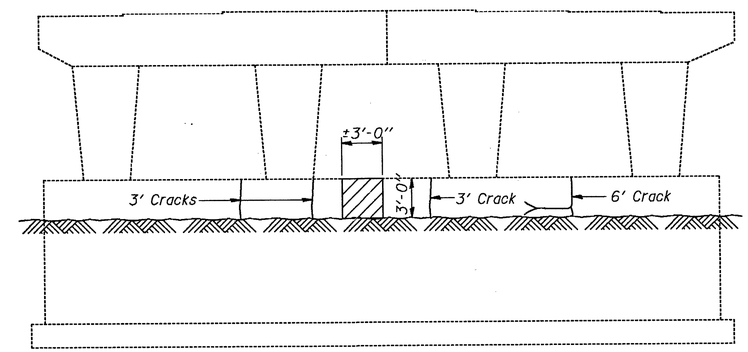

ELEVATION - PIER #3
(Looking South)

Note: Hatched areas indicate "Repair Concrete Structures."

BILL OF MATERIAL

Item	Unit	Pier #1	Pier #2	Pier #3
Repair Concrete Structures	Sq. Ft.	8 / 5.8	35 / 27.7	31 / 24.5
Epoxy Crack Sealing	Lin. Ft.	37 / 19.7	43 / 29.3	32.1

DESIGNED	R T Boro
CHECKED	Sheila E Moyneha
DRAWN	R. Doty
CHECKED	RTB SEM

May 17 1990

EXAMINED Jaj J Kaspar
ENGINEER OF BRIDGE DESIGN

PASSED Ralph E. Anderson
ENGINEER OF BRIDGES AND STRUCTURES

APPROVED
DIRECTOR OF HIGHWAYS

PIER REPAIR DETAILS
EAST BOUND LANES
F.A.I. RT. 39 SEC. 5HBD
WINNEBAGO COUNTY
STA. 872+39.77

STATE OF ILLINOIS
DEPARTMENT OF TRANSPORTATION

ROUTE NO.	SECTION	COUNTY	TOTAL SHEETS	SHEET NO.
S.B.I. F.A.I. 39	5HBD	WINNEBAGO	171	158
FED. ROAD DIST. NO. 7		ILLINOIS	FED. AID PROJECT-	

SHEET NO. 52
52 SHEETS

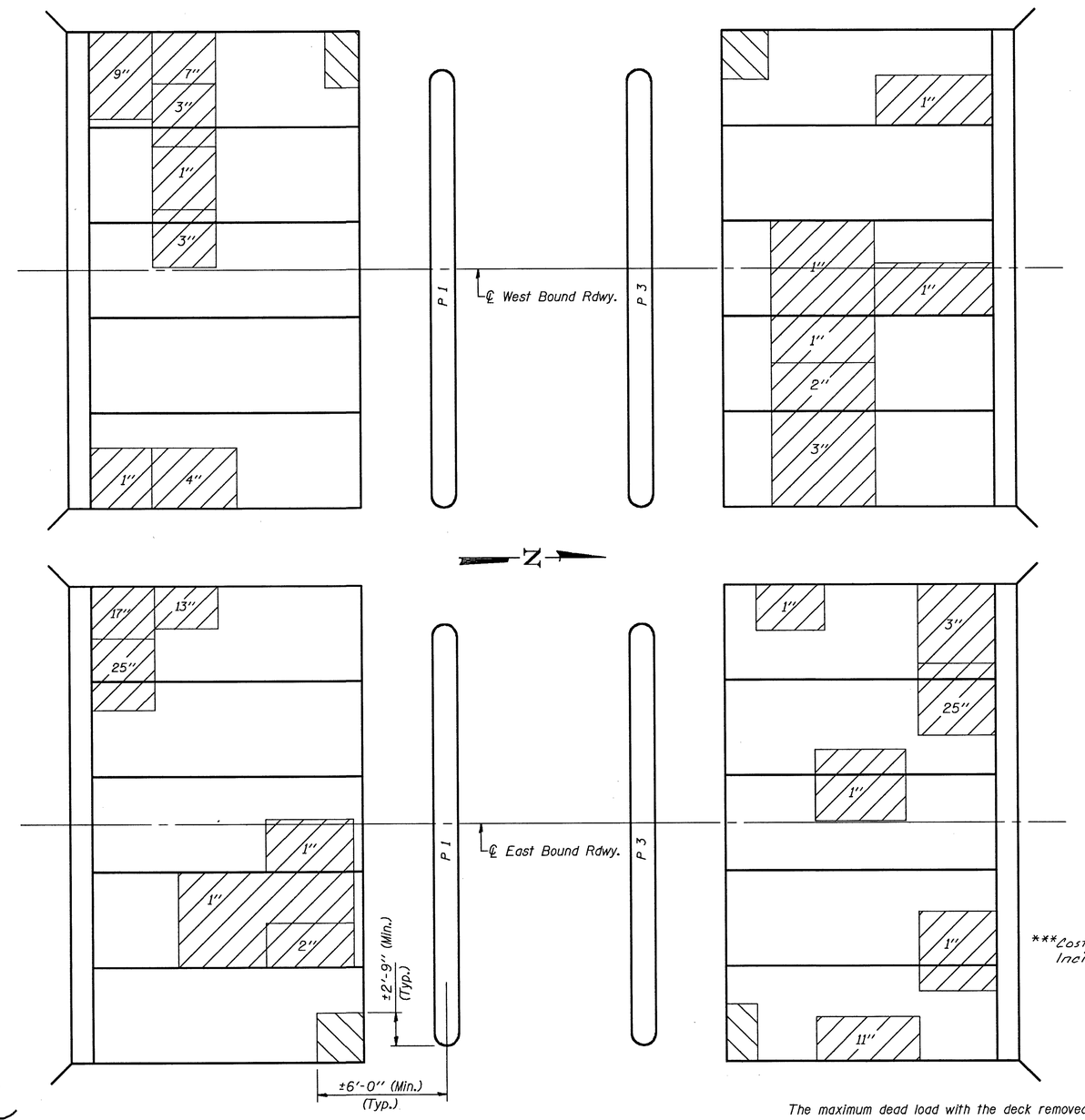

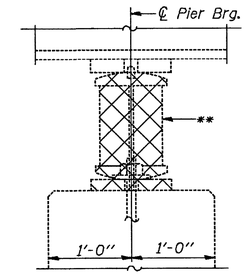

JACK EXISTING STRUCTURE PIERS 1 & 3

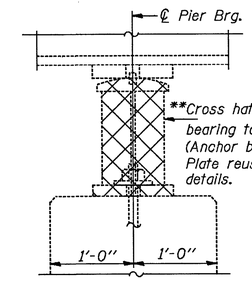

**Cross hatched area indicates existing bearing to be "Removed & Reinstalled." (Anchor bolts shall be extended & Top Plate reused). See sht. #33 of 52 for details.

JACK EXISTING STRUCTURE PIER 2

Hatched area indicates removal of exist. bearing.***
(Anchor Bolts and Top Plate shall be reused.)
See sht. #32 of 52 for details.

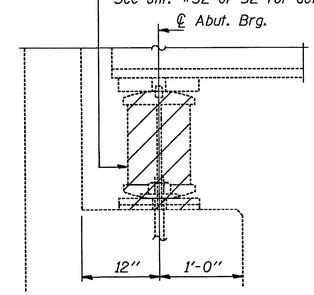

JACK EXISTING STRUCTURE ABUTMENTS

(Dimensions are at Rt. L's)

*Slope Wall shall be removed which interferes with "Structure Excavation" for Pier widening. Cost incidental to Structure Excavation. Areas removed shall be replaced with "Stone Dumped Riprap - Class A3" and "Filter Fabric For Use With Riprap." Cost is to be calculated at the unit price for these pay items. See sheet #1 of 52 for additional "Stone Dumped Riprap" locations.

Indicates "Slope Wall Slurry Pumping" Number indicates average depth assumed for quantities.

Indicates Slope Wall Removal & Replacement with "Stone Dumped Riprap - Class A3" and "Filter Fabric For Use With Riprap."

***Cost of "Removal of Existing Bearing" is Incidental to "Jacking Existing Structure."

BILL OF MATERIAL

Item	Unit	Quantity
Slope Wall Slurry Pumping	Cu. Yds.	~~17~~ 38.0

DESIGNED	RTBorn
CHECKED	Sheila E. Moynihan
DRAWN	R. Sommer
CHECKED	RTB SEM

May 17 1990
EXAMINED Jaj J. Kaspar ENGINEER OF BRIDGE DESIGN
PASSED Ralph E. Anderson ENGINEER OF BRIDGES AND STRUCTURES
APPROVED DIRECTOR OF HIGHWAYS

Jacking, cribbing & bearing replacement shall occur under Stage Construction with all beams being lifted simultaneously across the entire length of the bridge. Maximum difference between adjacent beams shall be ½". All beams are being raised ±4" in their final position. See sht. #28 of 52 for Final Top of Beam Elevation. All work concering bearings shall be done before the new deck is poured.

The maximum dead load with the deck removed per bearing is given in the following table.

Abutments = 3 kips
Piers 1 & 3 = 10 kips
Pier 2 = 12 kips

"SLOPE WALL REPAIR" &
"JACKING EXIST.STRUCTURE"
F.A.S. RT. 457 SEC. (11A)BR
WINNEBAGO COUNTY
STATION 84+81.00

SHOULDER DRAINS

*(4,4-1,5)RS

ROUTE NO.	SEC.	COUNTY	TOTAL SHEETS	SHEET NO.
FAI 39	*	WINNEBAGO	171	158A
FED. ROAD DIST. NO. 7	ILLINOIS	PROJECT		

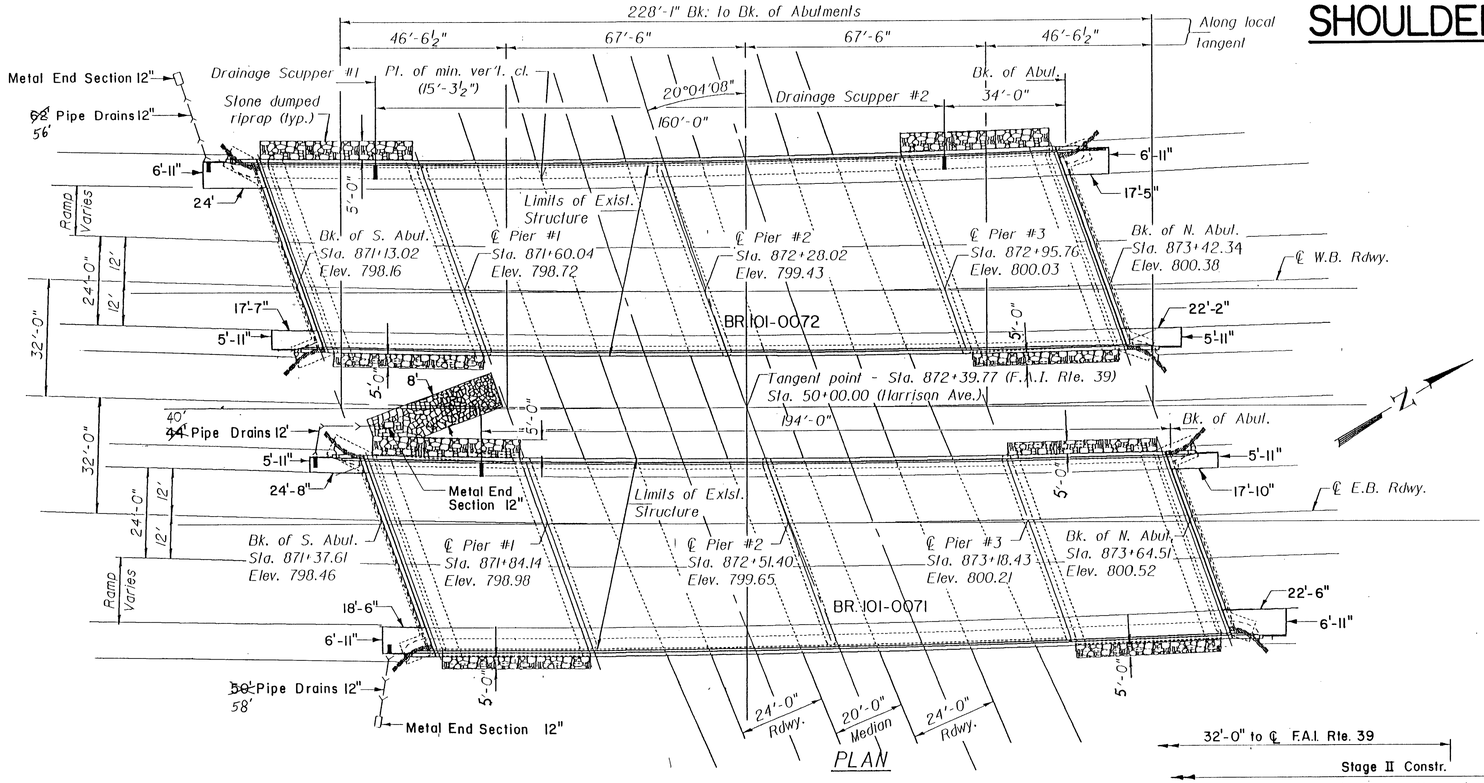

PLAN

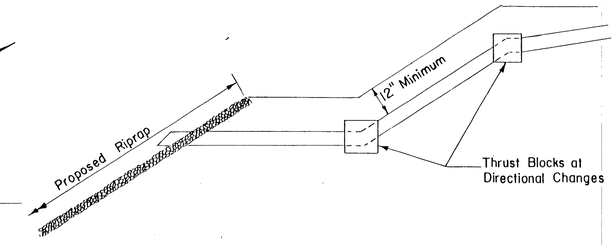

PC CONCRETE BRIDGE APPROACH SHOULDER PAVEMENT

LOCATION	SQ YD
Br 71 NE Corner	15.2
Br 71 NW Corner	11.3
Br 71 SE Corner	12.9
Br 71 SW Corner	13.2
Br 72 NE Corner	12.8
Br 72 NW Corner	13.2
Br 72 SE Corner	11.2
Br 72 SW Corner	15.2
	105.0 ✓

TYPE C INLET BOX, STANDARD 2324

LOCATION	EACH
Br 71 SE Corner	1 ✓
Br 71 SW Corner	1 ✓
Br 72 SW Corner	1 ✓
	3 ✓

CONCRETE THRUST BLOCKS

LOCATION	EACH
Br 71 SE Corner	1 ✓
Br 71 SW Corner	~~2~~ 1
Br 72 SW Corner	1 ✓
	~~4~~ 3

METAL END SECTIONS 12"

LOCATION	EACH
Br 71 SE Corner	1 ✓
Br 71 SW Corner	1 ✓
Br 72 SW Corner	1 ✓
	3

PIPE DRAINS 12"

LOCATION	LIN FT
Br 71 SE Corner	~~50~~ 58'
Br 71 SW Corner	~~44~~ 40'
Br 72 SW Corner	~~62~~ 56'
	~~156~~ 154

STONE DUMPED RIPRAP, CLASS A3

LOCATION	SQ YD
S. Slopewall at pipe drain	~~25~~ 222

FILTER FABRIC FOR USE WITH RIPRAP

LOCATION	SQ YD
S. Slopewall at pipe drain	~~25~~ 222

EXCAVATING AND GRADING EXISTING SHOULDER

LOCATION	SQ YD
Gore R1 of Sta. 870+00	88
Gore L1 of Sta. 875+00	88
	176

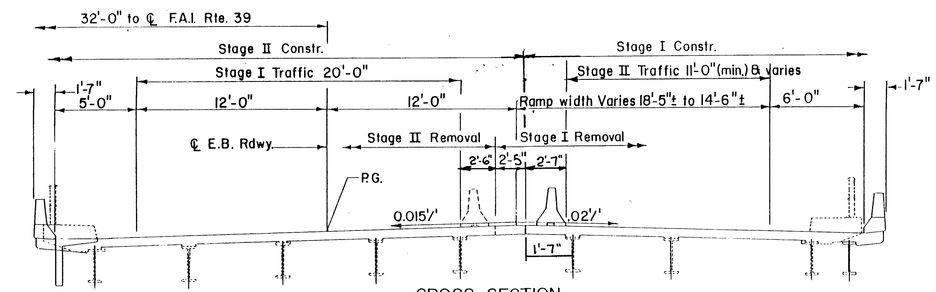

CROSS SECTION
EAST BOUND ROADWAY
Looking Northeast

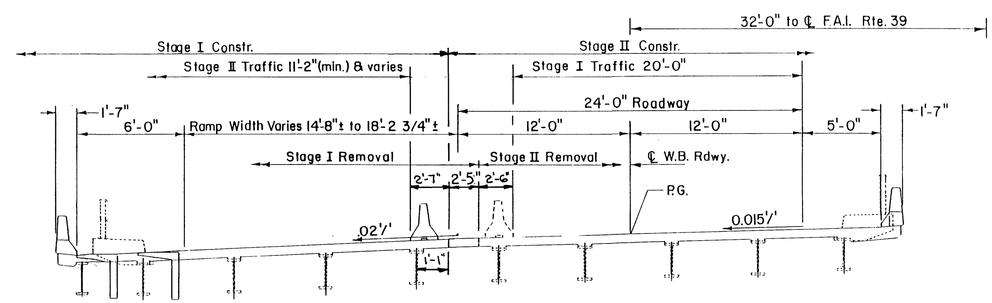

CROSS SECTION
WEST BOUND ROADWAY
Looking Northeast

DISTRICT NO. 2 DIXON

DESIGNED
DRAWN J. HANSEN DATE 3-90
CHECKED Ou DYN SCALE

BR. 101-0071 EB & 101-0072 WB AT HARRISON AVE.

Revised

4-23-10 LETTING ITEM 035

101-0071, 72

F.A.I. RTE.	SECTION	COUNTY	TOTAL SHEETS	SHEET NO.
39	(4VBY, 4VBY-1, 5HB)M	Winnebago	36 ✱	1
	ILLINOIS	CONTRACT NO. 64G12		

✱ 36+1=37

STATE OF ILLINOIS
DEPARTMENT OF TRANSPORTATION
DIVISION OF HIGHWAYS

FOR INDEX OF SHEETS, SEE SHEET NO. 3

PROPOSED
HIGHWAY PLANS

FAI ROUTE 39 (I–39)
SECTION (4VBY, 4VBY–1, 5HB)M
BRIDGE MAINTENANCE
JOINT REPLACEMENT
WINNEBAGO COUNTY

C–92–120–10

D–92–060–10

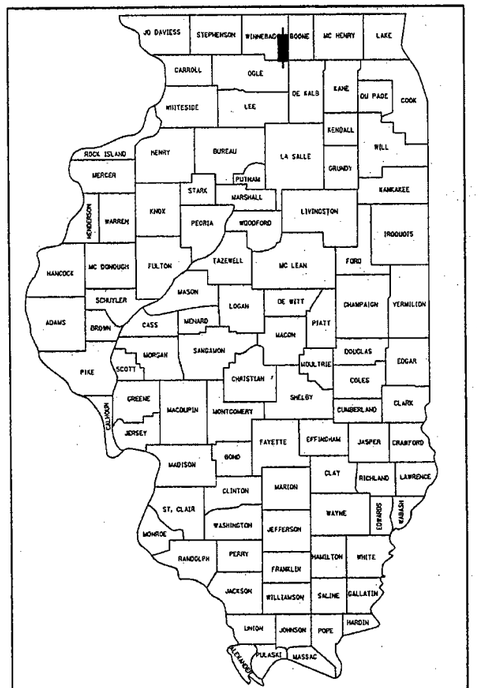

LOCATION OF SECTION INDICATED THUS:– ▬

Structure 101-0071 I-39 NB over Harrison Avenue
Structure 101-0072 I-39 SB over Harrison Avenue

Structure 101-0069 I-39 SB over UP Railroad
Structure 101-0070 I-39 NB over UP Railroad

Structure 101-0067 I-39 NB over CC&P Railroad
Structure 101-0068 I-39 SB over CC&P Railroad

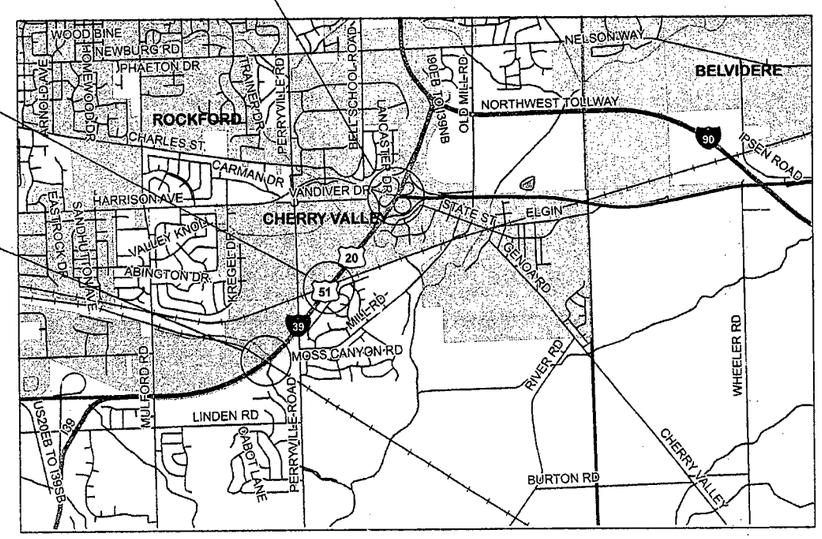

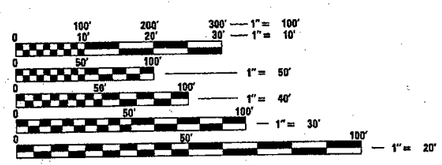

FULL SIZE PLANS HAVE BEEN PREPARED USING STANDARD ENGINEERING SCALES. REDUCED SIZED PLANS WILL NOT CONFORM TO STANDARD SCALES. IN MAKING MEASUREMENTS ON REDUCED PLANS, THE ABOVE SCALES MAY BE USED.

J.U.L.I.E.
JOINT UTILITY LOCATION INFORMATION FOR EXCAVATION
1–800–892–0123
OR 811

PROJECT ENGINEER: MAHMOUD ETEMADI 815/284–5393

GROSS LENGTH = 678 FT. = 0.128 MILE
NET LENGTH = 678 FT. = 0.128 MILE

STATE OF ILLINOIS
DEPARTMENT OF TRANSPORTATION
DIVISION OF HIGHWAYS

SUBMITTED Feb. 8th 2010
George F. Ryan
DEPUTY DIRECTOR OF HIGHWAYS, REGION ENGINEER

March 19, 2010
Scott E. Stitt, P.E.
acting ENGINEER OF DESIGN AND ENVIRONMENT

March 19, 2010
Christine M. Reed
DIRECTOR OF HIGHWAYS, CHIEF ENGINEER

PRINTED BY THE AUTHORITY OF THE STATE OF ILLINOIS

CONTRACT NO. 64G12

SUMMARY OF QUANTITIES

100% STATE
SFTY-2A
URBAN

PAY ITEM #	DESCRIPTION	UNIT	QUANTITY
40603570	POLYMERIZED HOT-MIX ASPHALT SURFACE COURSE, MIX "E", N90	TON	140
42001300	PROTECTIVE COAT	SQ YD	261
44000155	HOT-MIX ASPHALT SURFACE REMOVAL, 1 1/2"	SQ YD	1608
50102400	CONCRETE REMOVAL	CU YD	116.8
50300255	CONCRETE SUPERSTRUCTURE	CU YD	117.4
50800205	REINFORCEMENT BARS, EPOXY COATED	POUND	13,080
50800515	BAR SPLICERS	EACH	168
52000110	PREFORMED JOINT STRIP SEAL	FOOT	714
67100100	MOBILIZATION	L SUM	1
70100205	TRAFFIC CONTROL AND PROTECTION, STANDARD 701401	EACH	1
70100207	TRAFFIC CONTROL AND PROTECTION, STANDARD 701402	EACH	2
70100420	TRAFFIC CONTROL AND PROTECTION, STANDARD 701411	EACH	3
70300220	TEMPORARY PAVEMENT MARKING - LINE 4"	FOOT	30,200
70301000	WORK ZONE PAVEMENT MARKING REMOVAL	SQ FT	10,110
70400100	TEMPORARY CONCRETE BARRIER	FOOT	2,500
70400200	RELOCATE TEMPORARY CONCRETE BARRIER	FOOT	2,200
* 78001130	PAINT PAVEMENT MARKING - LINE 6"	FOOT	14,236
78300100	PAVEMENT MARKING REMOVAL	SQ FT	2,500
X0325702	NIGHTTIME WORK ZONE LIGHTING	L SUM	1
X7030020	TEMPORARY PAVEMENT MARKING TAPE, 8 INCH (BLACK)	FOOT	300
Z0030250	IMPACT ATTENUATORS, TEMPORARY (NON-REDIRECTIVE), TEST LEVEL 3	EACH	6
Z0030280	IMPACT ATTENUATORS, TEMPORARY (SEVERE USE,NARROW), TEST LEVEL 3	EACH	2
Z0030350	IMPACT ATTENUATORS, RELOCATE (NON-REDIRECTIVE), TEST LEVEL 3	EACH	4

* SPECIALTY ITEM

GENERAL NOTES

The final top four inches of soil in any right-of-way area disturbed by the Contractor must be capable of supporting vegetation. The soil must be from the A horizon (zero to 2' deep) of soil profiles of local soils.

All Borrow/Waste/Use sites must be approved by the Department prior to removing any material from the project or initiating any earthmoving activities, including temporary stockpiling outside the limits of construction.

The Contractor shall seed all disturbed areas within the project limits. Seeding Class 4 or 2A shall be used, except in front of properties where the grass will be mowed, then use Seeding, Class 1. Class 2A shall be used on front slopes and ditch bottoms. Class 4 shall be used behind Type A gutter, on all backslopes and areas behind the backslope, and beyond the toe of front slope on fill sections without ditches. This work will be included in the contract unit price per Cubic Yard for Concrete Superstructure.

Fertilizer shall be applied to all disturbed areas and incorporated into the seedbed prior to seeding or placement of sod at the rate specified in Sections 250 and 252 of the Standard Specifications. This work shall be included in the cost of Concrete Superstructure.

Mulch Method II shall be applied over all seeded areas. This shall be included in the cost of the Concrete Superstructure.

The following Mixture Requirements are applicable for this project:

Mixture Uses(s):
PG:
Design Air Voids
Mixture Composition
(Gradation Mixture)
Friction Aggregate
20 Year ESAL

Bituminous and Aggregate prime coat shall be placed in accordance with Section 406 of the Standard Specifications. The cost of the prime coats shall be included in the contract unit price per ton for Polymerized Hot-Mix Asphalt Surface Course, Mix "E", N90.

At bridge expansion joints, if temporary expansion joint bulkheads are attached to adjacent deck slabs or abutments for support, the Contractor shall cut the attachments as soon as the concrete has set to prevent joint damage due to horizontal contraction or expansion.

Pavement Marking shall be done according to Standard 780001, except as follows:

1. All words, such as ONLY, shall be 2.4 m (8 feet) high.
2. All non-freeway arrows shall be the large size.
3. The distance between yellow no-passing lines shall be 200 mm (8"), not 180 mm (7") as shown in the detail of Typical Lane and Edge Lines.

The Contractor shall be responsible for protecting utility property during construction operations as outlined in Article 107.31 of the Standard Specifications. A minimum of 48 hours advance notice is required for non-emergency work. The JULIE number is 800-892-0123.

INDEX OF SHEETS

1. Cover Sheet
2. Summary of Quantities
3. General Notes, Index of Sheets, Standards
4. Traffic Control Plan Structures 101-0067 & 0068
5. Staging Cross Section Structures 101-0067 & 0068
6. Traffic Control Plan Structures 101-0069 & 0070
7. Staging Cross Section Structures 101-0069 & 0070
8. -10. Traffic Control Plan Stage I Structures 101-0071 & 0072
11. -13. Traffic Control Plan Stage II Structures 101-0071 & 0072
14. Staging Cross Sections Structures 101-0071 & 0072
15. Bridge Approach Resurfacing Structures 101-0067, 0068, 0069 & 0070
16. Bridge Approach Resurfacing Structures 101-0071 & 0072
17. -23. Bridge Repair Plans Structures 101-0067 & 0068
24. -28. Bridge Repair Plans Structures 101-0069 & 0070
29. -35A Bridge Repair Plans Structures 101-0071 & 0072
36. District Standard for Narrow Width Signing

STANDARDS

701101-02 Off-Road Operations, Multilane, 4.5 m (15') to 600 mm (24") From Pavement Edge
701400-04 Approach to Lane Closure, Freeway/Expressway
701401-05 Lane Closure, Freeway/Expressway
701402-07 Lane Closure, Freeway/Expressway, with Barrier
701411-06 Lane Closure, Multilane, at Entrance or Exit Ramp, for Speeds > 45 MPH
701426-03 Lane Closure, Multilane, Intermittent or Moving Operation, for Speeds > 45 MPH
701901-01 Traffic Control Devices
720001-01 Sign Panel Mounting Details
720011-01 Metal Posts for Signs, Markers and Delineators
728001-01 Telescoping Steel Sign Support
729001-01 Applications of Types A and B Metal Posts (For Signs & Markers)

STATE OF ILLINOIS
DEPARTMENT OF TRANSPORTATION

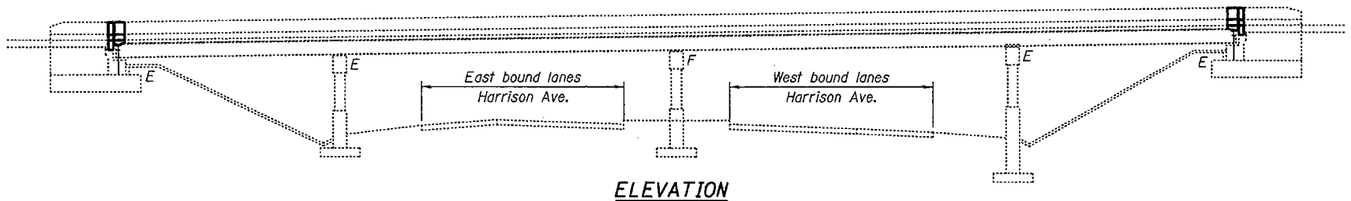

ELEVATION

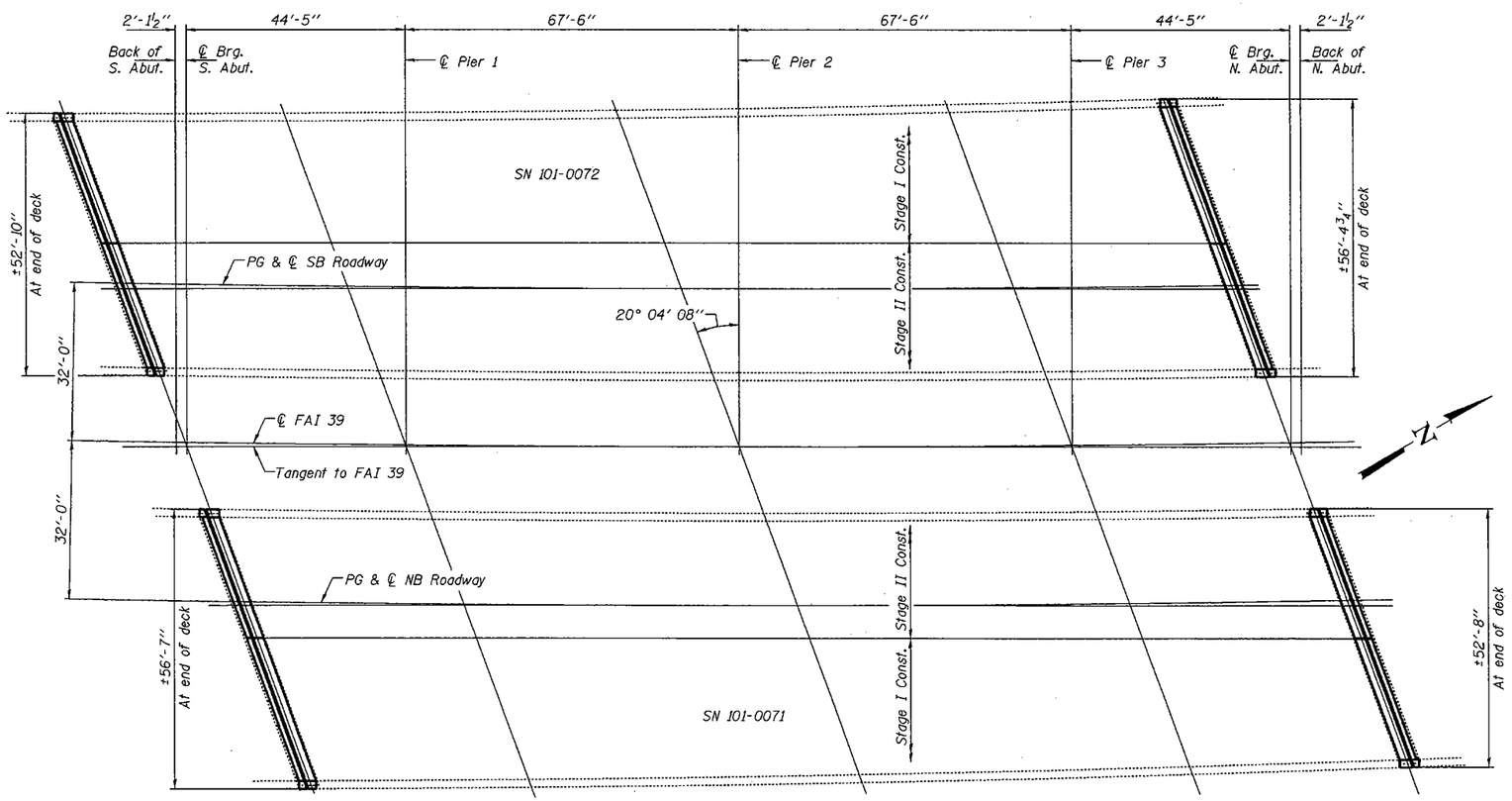

PLAN

Horizontal dimensions are along local tangent

GENERAL NOTES

Existing reinforcement bars extending into the removal area shall be cleaned, straightened and incorporated into the new construction. Any reinforcement bars that are damaged during concrete removal shall be replaced with an approved bar splicer or anchorage system. Cost included with Concrete Removal.

Joint openings shall be adjusted according to Article 520.04 of the Std. Specs. when the deck is poured at an ambient temperature other than 50° F.

Prior to pouring the new concrete deck, all heavy or loose rust, loose mill scale, and other loose or potentially detrimental foreign material shall be removed from the surfaces in contact with concrete. Tightly adhered paint may remain unless otherwise noted. Removal shall be accomplished by methods that will not damage the steel and the cost will be included in the pay item covering removal of the existing concrete.

The existing structural steel coating contains lead. The Contractor shall take appropriate precautions to deal with the presence of lead on this project.

Reinforcement bars shall conform to the requirements of ASTM A 706 Gr 60. See Special Provisions.

Reinforcement bars designated (E) shall be epoxy coated.

Plan dimensions and details relative to existing plans are subject to nominal construction variations. The Contractor shall field verify existing dimensions and details affecting new construction and make necessary approved adjustments prior to construction or ordering of materials. Such variations shall not be cause for additional compensation for a change in scope of the work, however, the Contractor will be paid for the quantity actually furnished at the unit price bid for the work.

The deck surface shall have its final finish tined according to Article 420.09(e)(1) of the Standard Specifications. Cost included with Concrete Superstructure.

TOTAL BILL OF MATERIAL

ITEM	UNIT	QUANTITY
Concrete Removal	Cu. Yd.	36.5
Concrete Superstructure	Cu. Yd.	37.0
Preformed Joint Strip Seal	Foot	228
Reinforcement Bars, Epoxy Coated	Pound	4160
Bar Splicers	Each	56
* Protective Coat	Sq. Yd.	85

* On new concrete only

DESIGNED	Eric D. Sage
CHECKED	Adrian T. Holloway
DRAWN	baliva
CHECKED	JSL ATH

MARCH 9, 2010
EXAMINED — ENGINEER OF STRUCTURAL SERVICES
PASSED — ENGINEER OF BRIDGES AND STRUCTURES

STATE OF ILLINOIS RALPH E. ANDERSON 081-004625 SPRINGFIELD LICENSED STRUCTURAL ENGINEER

EXPIRES 11-30-2010

PLAN AND ELEVATION
FAI 39 OVER HARRISON AVE.
SN 101-0071 & 0072

SHEET NO. 1	F.A.I. RTE.	SECTION	COUNTY	TOTAL SHEETS	SHEET NO.
7 SHEETS	39	(4VBY,4VBY-1,5HB)M	WINNEBAGO	36	30
			CONTRACT NO. 64G12		
	FED. ROAD DIST. NO.	ILLINOIS	FED. AID PROJECT		

1010071.dgn 3/9/2010 11:25:45 AM

STATE OF ILLINOIS
DEPARTMENT OF TRANSPORTATION

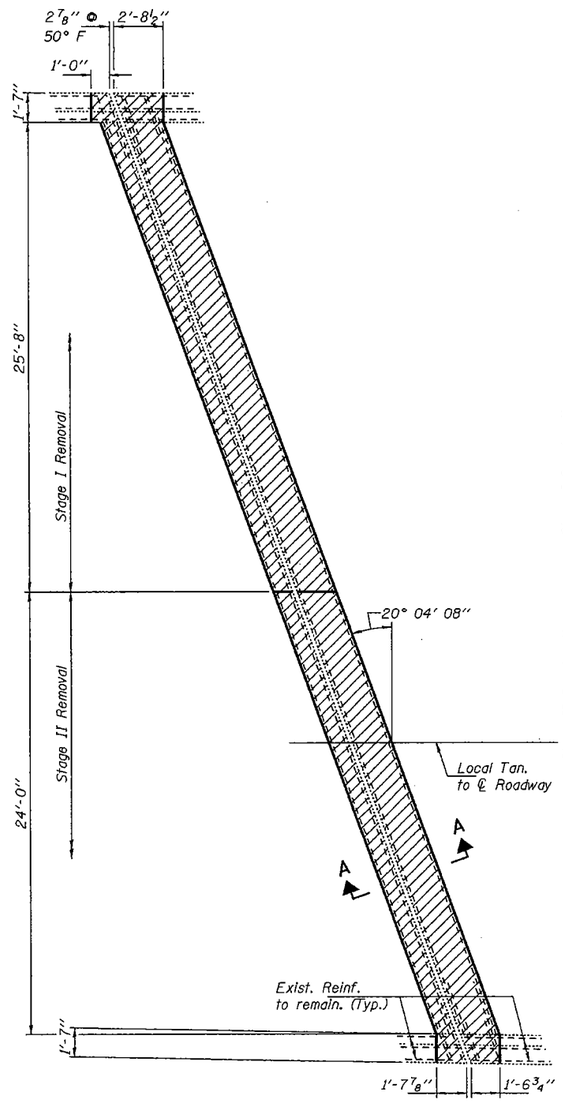

REMOVAL PLAN
South Abutment

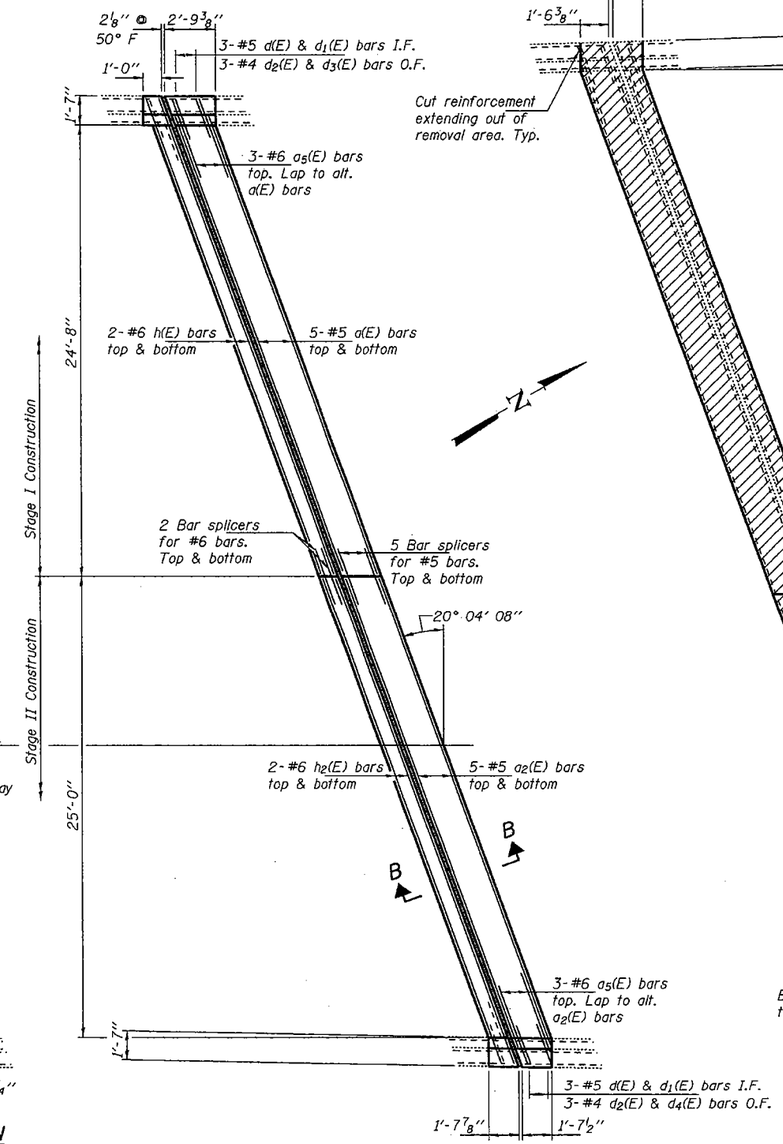

REPLACEMENT PLAN
South Abutment

REMOVAL PLAN
North Abutment

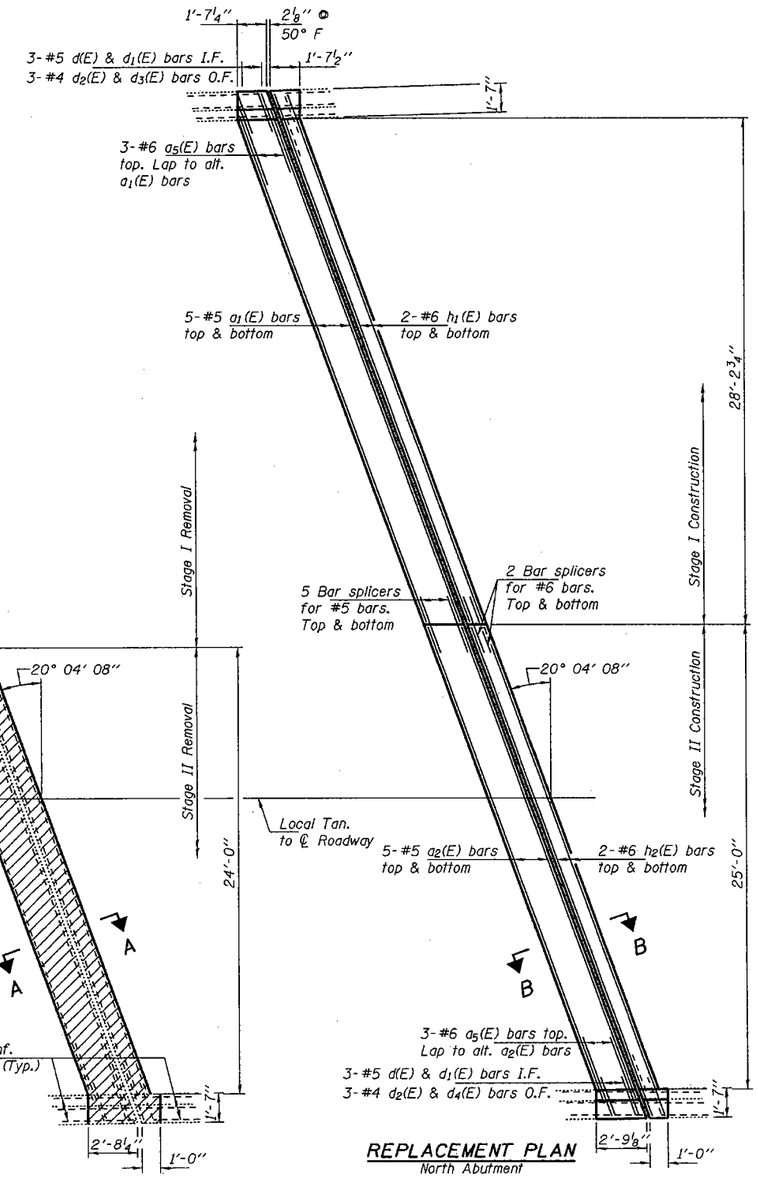

REPLACEMENT PLAN
North Abutment

JOINT REPLACEMENT DETAILS
FAI 39 OVER HARRISON AVE.
SN 101-0072

DESIGNED	IJL
CHECKED	ATH
DRAWN	ballva
CHECKED	IJL ATH

MARCH 9, 2010
EXAMINED — ENGINEER OF STRUCTURAL SERVICES
PASSED — ENGINEER OF BRIDGES AND STRUCTURES

Notes:
Hatched areas indicate removal.
Cut a(E) thru a2(E) & h(E) thru h2(E) bars as required.
For Sections A-A & B-B, bar details and Bill of Material, see sheet 4 of 7.

SHEET NO. 2	F.A.I. RTE.	SECTION	COUNTY	TOTAL SHEETS	SHEET NO.
7 SHEETS	39	(4VBY,4VBY-1,5HB)M	WINNEBAGO	36	31
			CONTRACT NO. 64G12		
	FED. ROAD DIST. NO.	ILLINOIS	FED. AID PROJECT		

1030071.dgn 3/9/2010 11:26:49 AM

STATE OF ILLINOIS
DEPARTMENT OF TRANSPORTATION

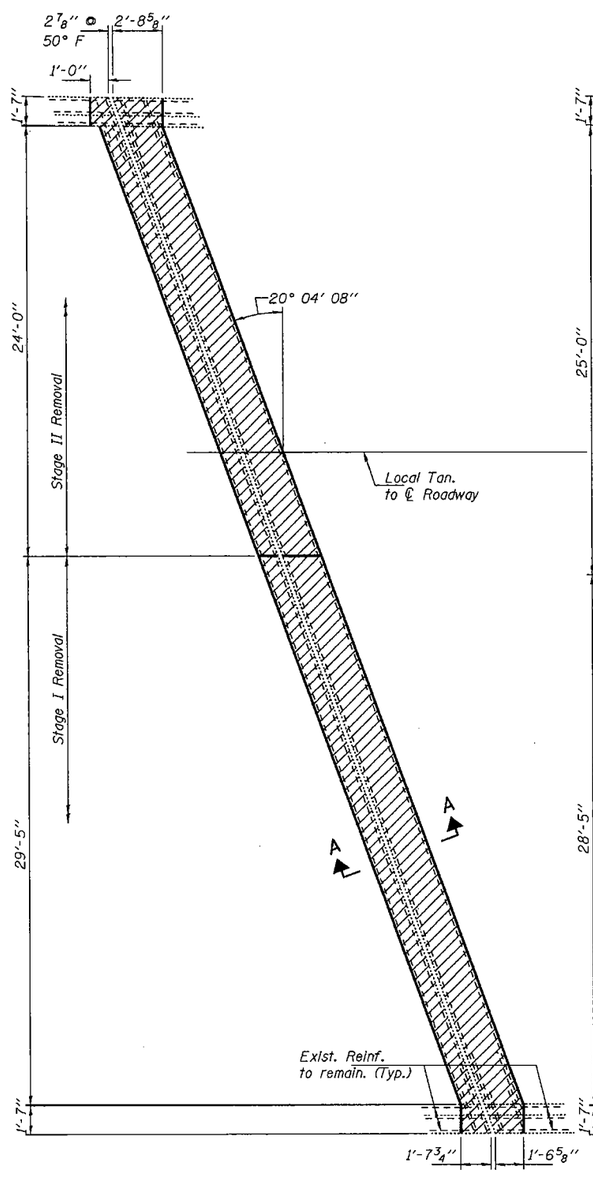

REMOVAL PLAN
South Abutment

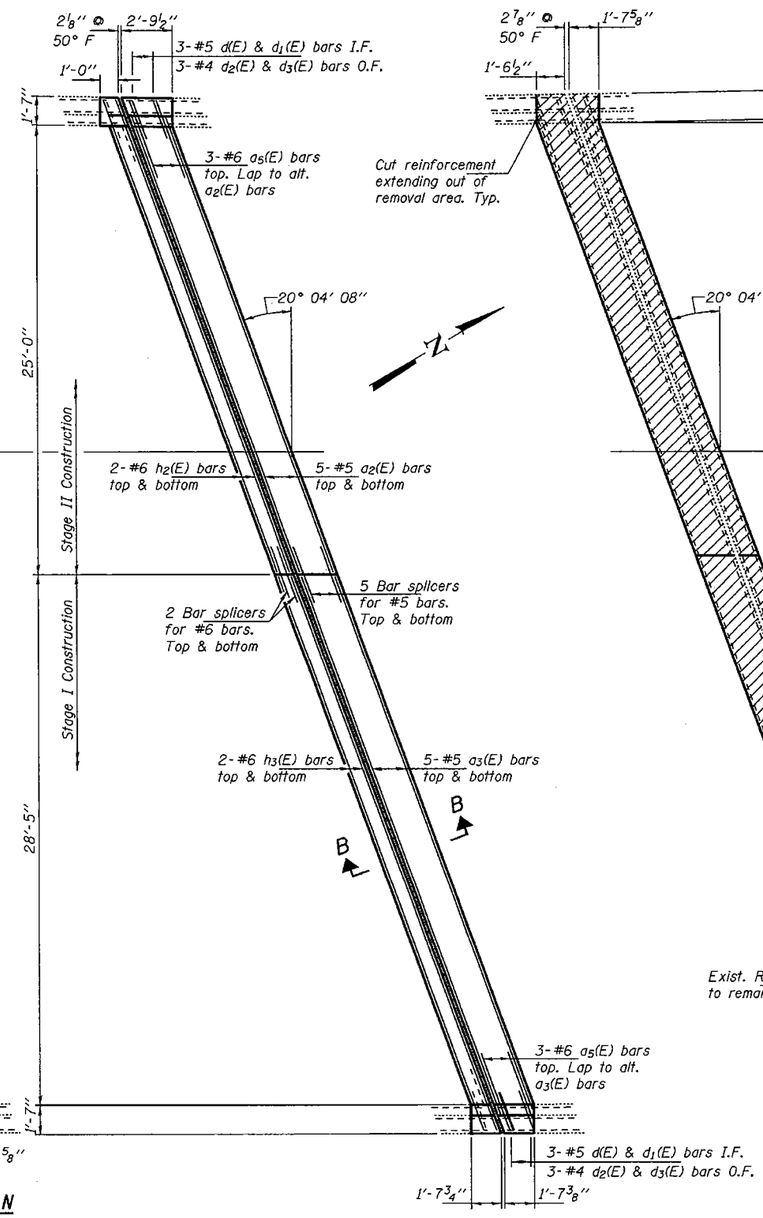

REPLACEMENT PLAN
South Abutment

Notes:
Hatched areas indicate removal.
Cut $a_2(E)$ thru $a_4(E)$ & $h_2(E)$ thru $h_4(E)$ bars as required.
For Sections A-A & B-B, bar details and Bill of Material, see sheet 4 of 7.

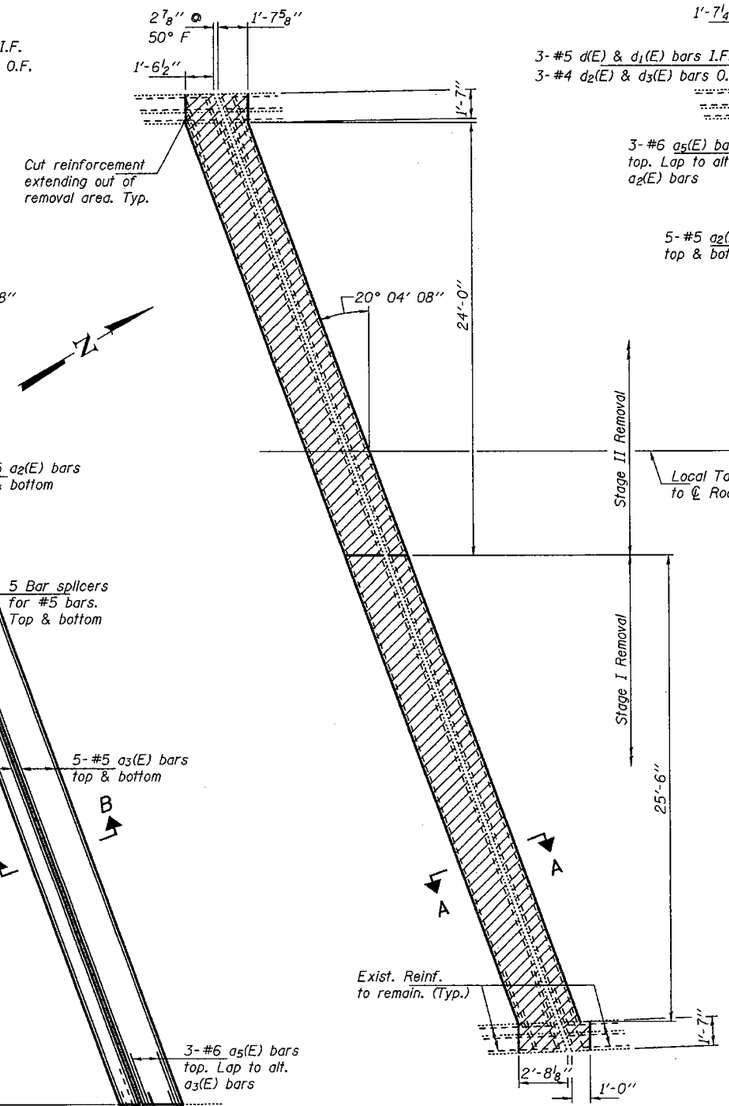

REMOVAL PLAN
North Abutment

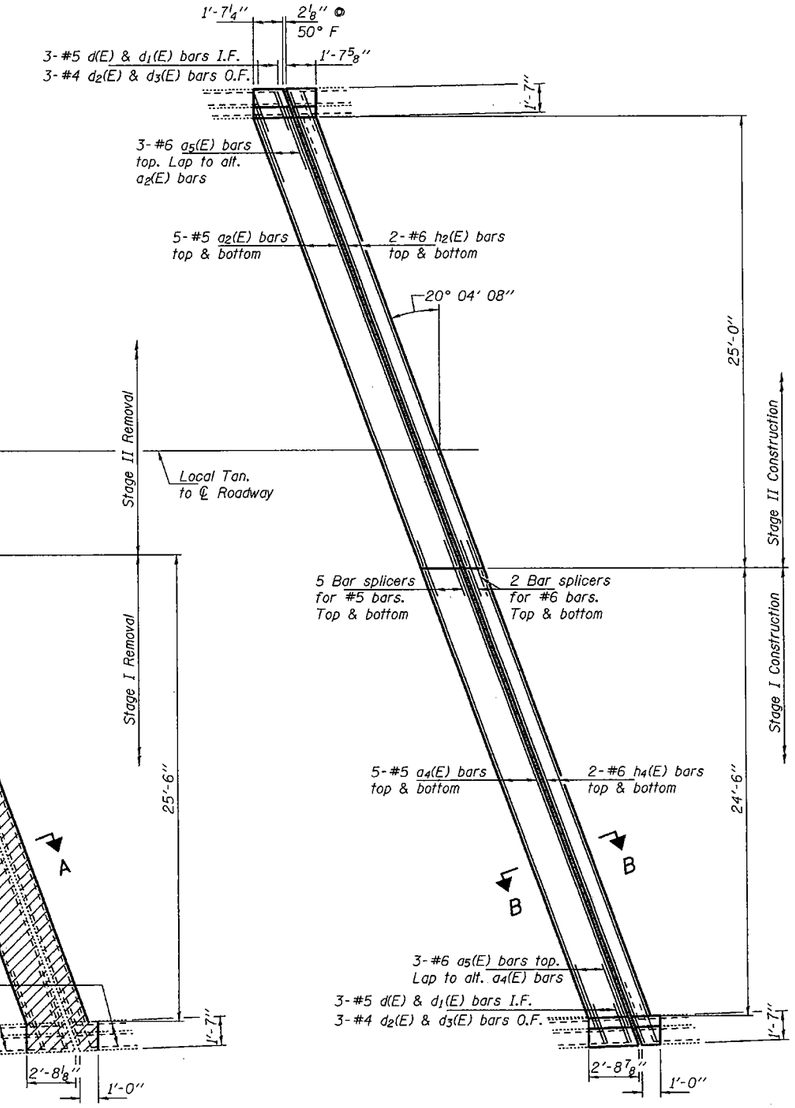

REPLACEMENT PLAN
North Abutment

JOINT REPLACEMENT DETAILS
FAI 39 OVER HARRISON AVE.
SN 101-0071

DESIGNED	IJL
CHECKED	ATH
DRAWN	baliva
CHECKED	IJL ATH

MARCH 9, 2010
EXAMINED A. Carl Pursey
ENGINEER OF STRUCTURAL SERVICES
PASSED Ralph E. Anderson
ENGINEER OF BRIDGES AND STRUCTURES

SHEET NO. 3	F.A.I. RTE.	SECTION	COUNTY	TOTAL SHEETS	SHEET NO.
7 SHEETS	39	(4VBY,4VBY-1,5HB)M	WINNEBAGO	36	32
			CONTRACT NO. 64G12		
	FED. ROAD DIST. NO.	ILLINOIS	FED. AID PROJECT		

IC10071.dgn 3/9/2010 11:26:50 AM

STATE OF ILLINOIS
DEPARTMENT OF TRANSPORTATION

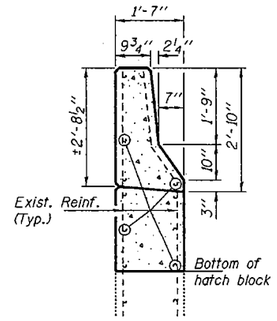

TYPICAL SECTION AT APPROACH PARAPET

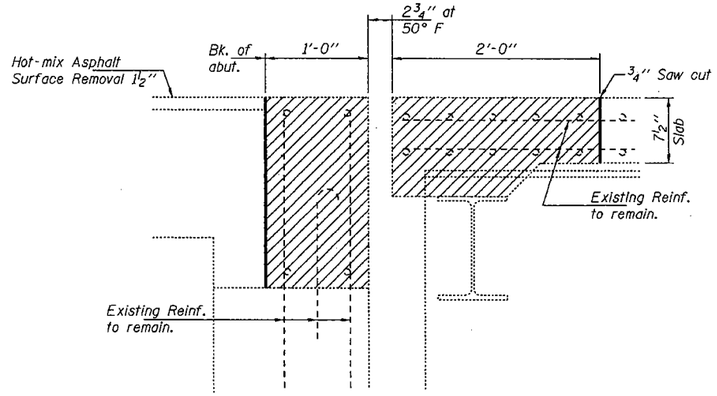

SECTION A-A
(Near ℄ Roadway)
(Dimensions are at RT L's to end of deck)

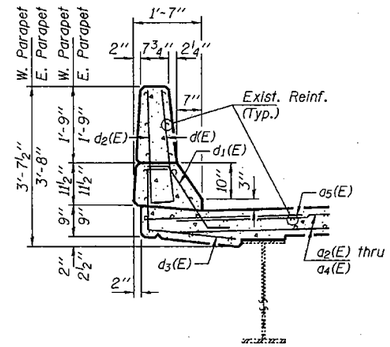

TYPICAL PARAPET SECTION
SN 101-0071

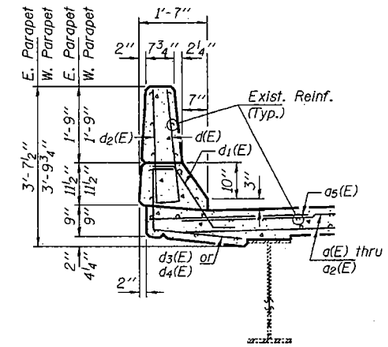

TYPICAL PARAPET SECTION
SN 101-0072

BARS d(E) & d2(E)

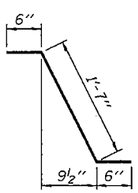

BAR d1(E)

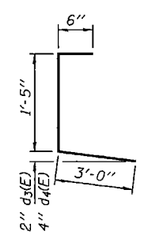

BARS d3(E) & d4(E)

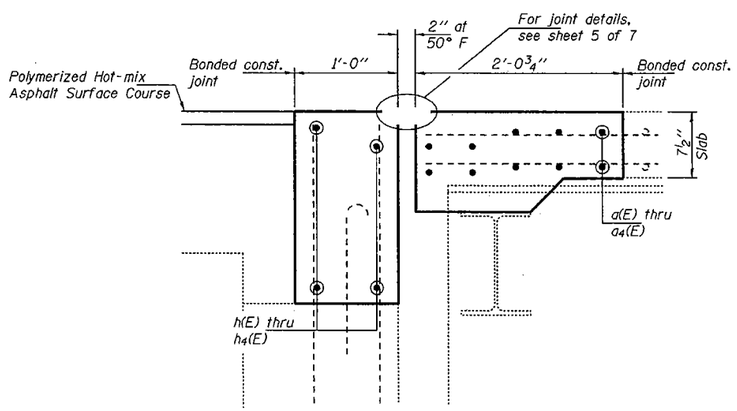

SECTION B-B
(Near ℄ Roadway)
(Dimensions are at RT L's to end of deck)

BILL OF MATERIAL
SN 101-0071

Bar	No.	Size	Length	Shape
a2(E)	20	#5	27'-3"	
a3(E)	10	#5	30'-9"	
a4(E)	10	#5	26'-6"	
a5(E)	12	#6	4'-10"	
d(E)	12	#5	3'-0"	
d1(E)	12	#5	2'-7"	
d2(E)	12	#4	3'-0"	
d3(E)	12	#4	4'-11"	
h2(E)	8	#6	27'-11"	
h3(E)	4	#6	31'-8"	
h4(E)	4	#6	27'-6"	
Concrete Removal			Cu. Yd.	18.0
Concrete Superstructure			Cu. Yd.	18.2
Reinforcement Bars, Epoxy Coated			Lbs.	2080

BILL OF MATERIAL
SN 101-0072

Bar	No.	Size	Length	Shape
d(E)	10	#5	26'-9"	
a1(E)	10	#5	30'-7"	
a2(E)	20	#5	27'-3"	
a5(E)	12	#6	4'-10"	
d(E)	12	#5	3'-0"	
d1(E)	12	#5	2'-7"	
d2(E)	12	#4	3'-0"	
d3(E)	6	#4	4'-11"	
d4(E)	6	#4	4'-11"	
h(E)	4	#6	27'-7"	
h1(E)	4	#6	31'-6"	
h2(E)	8	#6	27'-11"	
Concrete Removal			Cu. Yd.	18.5
Concrete Superstructure			Cu. Yd.	18.8
Reinforcement Bars, Epoxy Coated			Lbs.	2080

JOINT REPLACEMENT DETAILS
FAI 39 OVER HARRISON AVE.
SN 101-0071 & 0072

DESIGNED	IJL
CHECKED	ATH
DRAWN	baliva
CHECKED	IJL ATH

MARCH 9, 2010
EXAMINED — ENGINEER OF STRUCTURAL SERVICES
PASSED — ENGINEER OF BRIDGES AND STRUCTURES

SHEET NO. 4	F.A.I. RTE.	SECTION	COUNTY	TOTAL SHEETS	SHEET NO.
7 SHEETS	39	(4VBY,4VBY-1,5HB)M	WINNEBAGO	36	33
			CONTRACT NO. 64G12		
	FED. ROAD DIST. NO.	ILLINOIS	FED. AID PROJECT		

1010071.dgn 3/9/2010 11:25:50 AM

STATE OF ILLINOIS
DEPARTMENT OF TRANSPORTATION

* Granular or solid flux filled headed studs conforming to Article 1006.32 of the Std. Specs., automatically end welded.

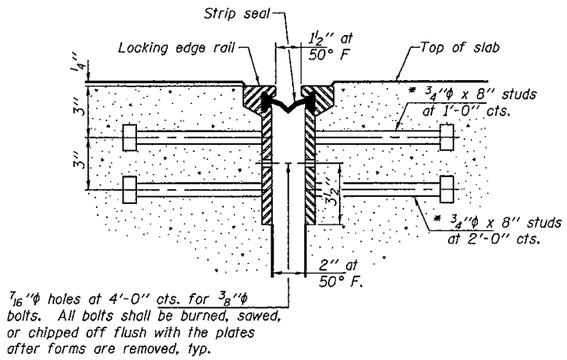

SECTION THRU ROLLED RAIL JOINT

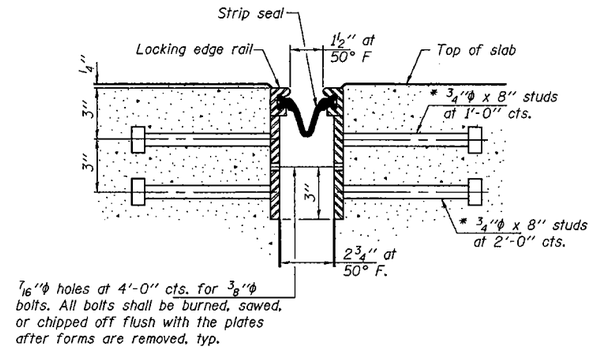

SECTION THRU WELDED RAIL JOINT

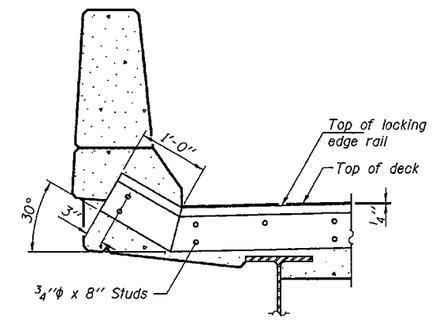

AT PARAPET

See Section A-A for end treatment of skews > 30°.

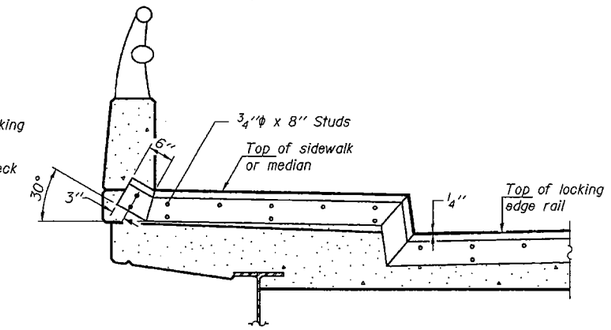

AT SIDEWALK OR MEDIAN

Shorter plates with a single row of studs at 12" cts. may be necessary on medians which are shallower than 9". See manufacturer's recommendation.

TYPICAL END TREATMENTS

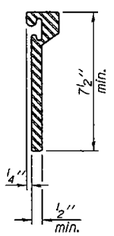

ROLLED EXTRUDED RAIL

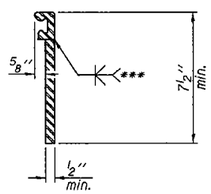

WELDED RAIL

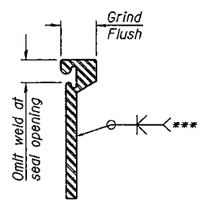

*** Back gouge not required if complete joint penetration is verified by mock-up.

LOCKING EDGE RAIL SPLICE

The inside of the locking edge rail groove shall be free of weld residue.

Rolled rail shown, welded rail similar.

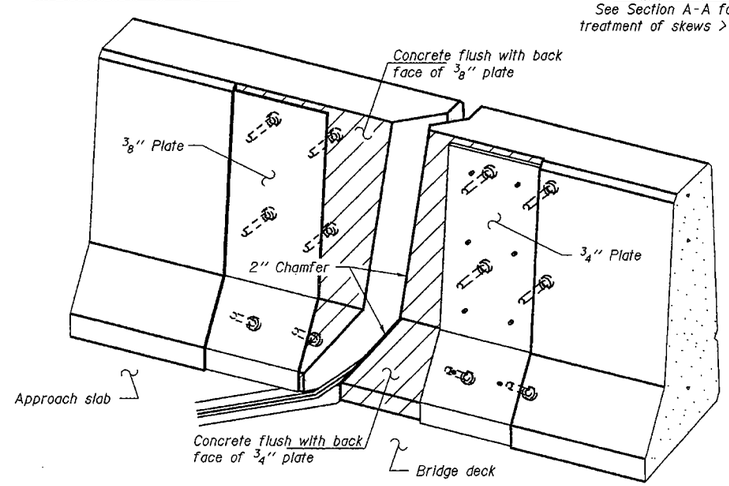

TRIMETRIC VIEW

(Showing back plates only)

Notes:

The strip seal shall be made continuous and shall have a minimum thickness of ¼". The configuration of the strip seal shall match the configuration of the Locking Edge Rails. Open or "webbed" strip seal gland configurations are not permitted. The gland shall be sized for a maximum rated movement of 4 inches.

The Locking Edge Rails depicted are conceptual only, except for the minimum dimensions shown. The actual configuration of the Locking Edge Rails and matching strip seal may vary from manufacturer to manufacturer. Flanged edge rails will not be allowed. Locking Edge Rails may be spliced at slope discontinuities.

The manufacturer's recommended installation methods shall be followed.

The joint opening and deck dimensions detailed on the superstructure are based on a rolled rail expansion joint. If the Contractor elects to use the welded rail expansion joint, the opening and deck dimensions shall be modified according to the dimensions detailed on this sheet. Required modifications shall be made at no additional cost to the State.

All steel components shall be galvanized after fabrication according to Article 520.03 of the Standard Specifications.

Maximum space between rail segments at stage lines shall be 3/16", sealed with a suitable sealant.

LOCKING EDGE RAILS

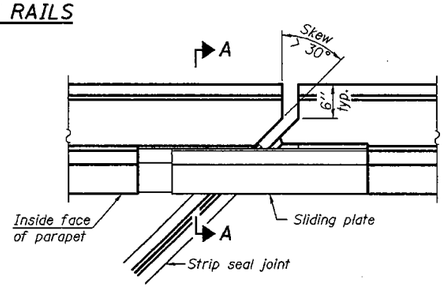

PLAN

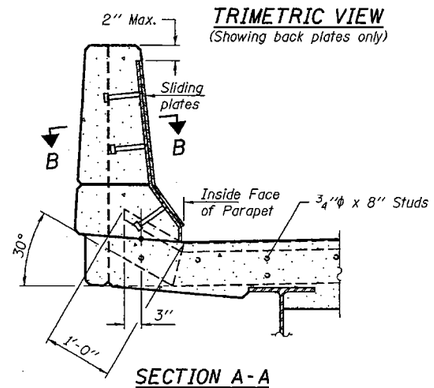

SECTION A-A

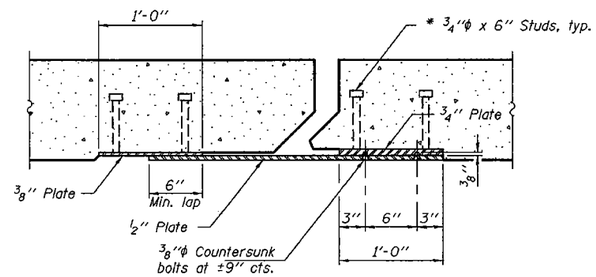

SECTION B-B

POINT BLOCK DETAILS

(for skews > 30°)

BILL OF MATERIAL

Item	Unit	Total
Preformed Joint Strip Seal	Foot	228

PREFORMED JOINT STRIP SEAL
FAI 39 OVER HARRISON AVE.
SN 101-0071 & 0072

DESIGNED	IJL
CHECKED	ATH
DRAWN	baliva
CHECKED	IJL ATH

MARCH 9, 2010
EXAMINED — ENGINEER OF STRUCTURAL SERVICES
PASSED — ENGINEER OF BRIDGES AND STRUCTURES

EJ-SSJ 11-1-09

SHEET NO. 5	F.A.I. RTE.	SECTION	COUNTY	TOTAL SHEETS	SHEET NO.
7 SHEETS	39	(4VBY,4VBY-1,5HB)M	WINNEBAGO	36	34
			CONTRACT NO. 64G12		
	FED. ROAD DIST. NO.	ILLINOIS	FED. AID PROJECT		

1010071.dgn 3/9/2010 11:26:51 AM

STATE OF ILLINOIS
DEPARTMENT OF TRANSPORTATION

When "A" is 3'-6" or less, the temporary concrete barrier shall be anchored to the new slab according to Detail I or Detail II. No anchorage is required when "A" is greater than 3'-6".

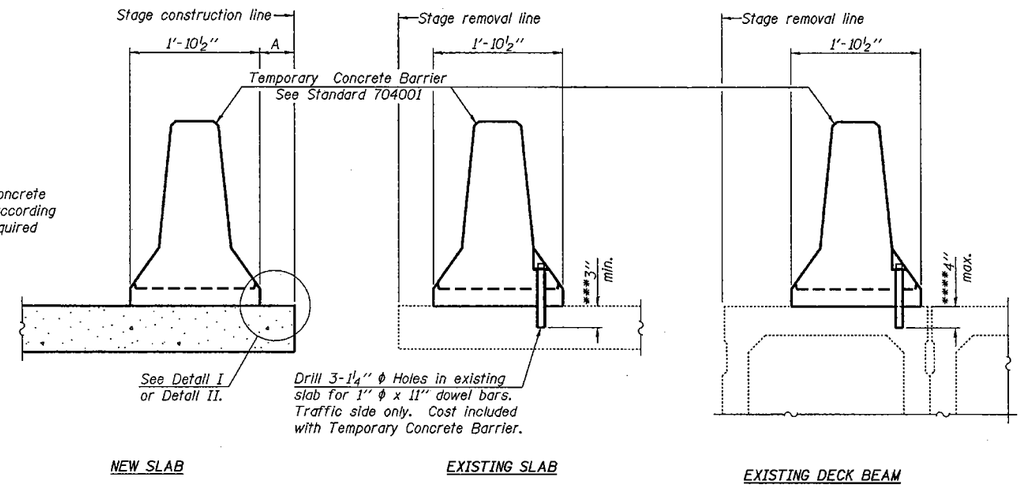

SECTIONS THRU SLAB OR DECK BEAM

NOTES

Detail I - With Bar Splicer or Couplers:
Connect one (1) 1"x7"x10" steel ℙ to the top layer of couplers with 2-⅝" ϕ bolts screwed to coupler at approximate ℄ of each barrier panel.

Detail II - With Extended Reinforcement Bars:
Connect one (1) 1"x7"x 10" steel ℙ to the concrete slab or concrete wearing surface with 2-⅝" ϕ Expansion Anchors or cast in place inserts spaced between the top layer of reinforcement at approximate ℄ of each barrier panel.

Cost of anchorage is included with Temporary Concrete Barrier.

The 1" x 7" x 10" plate shall not be removed until stage II construction forms and all reinforcement bars are in place and the concrete is ready to be placed.

*** Dimension shown is minimum required embedment into concrete. If hot-mix asphalt wearing surface is present, minimum embedment shall be in addition to wearing surface depth.

**** If existing deck beam is to remain in place after stage construction, embedment shall only be into wearing surface and not into existing deck beam concrete.

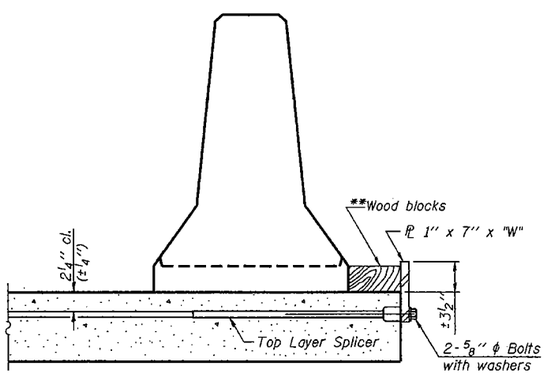

DETAIL I

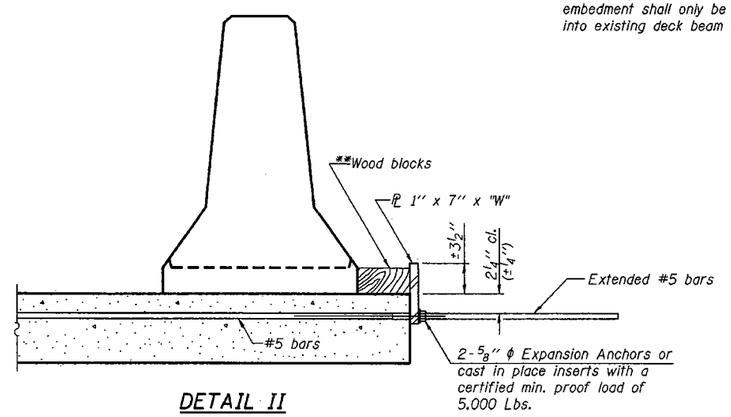

DETAIL II

** Wood blocks may be omitted when required to provide minimum stage traffic lane width. When the wood blocks are omitted, the concrete barrier shall be in direct contact with the steel retainer plate.

"W" = Top bars spacing + 4"

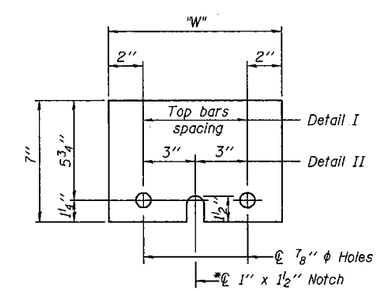

STEEL RETAINER ℙ 1" x 7" x 10"

* Required only with Detail II

TEMPORARY CONCRETE BARRIER
FAI 39 OVER HARRISON AVE.
SN 101-0071 & 0072

DESIGNED	IJL
CHECKED	ATH
DRAWN	baliva
CHECKED	IJL ATH

MARCH 9, 2010
EXAMINED — ENGINEER OF STRUCTURAL SERVICES
PASSED — ENGINEER OF BRIDGES AND STRUCTURES

R-27 11-1-09

SHEET NO. 6	F.A.I. RTE.	SECTION	COUNTY	TOTAL SHEETS	SHEET NO.
7 SHEETS	39	(4VBY,4VBY-1,5HB)M	WINNEBAGO	36	35
			CONTRACT NO. 64G12		
	FED. ROAD DIST. NO.	ILLINOIS	FED. AID PROJECT		

1010071.dgn 3/9/2010 11:28:51 AM