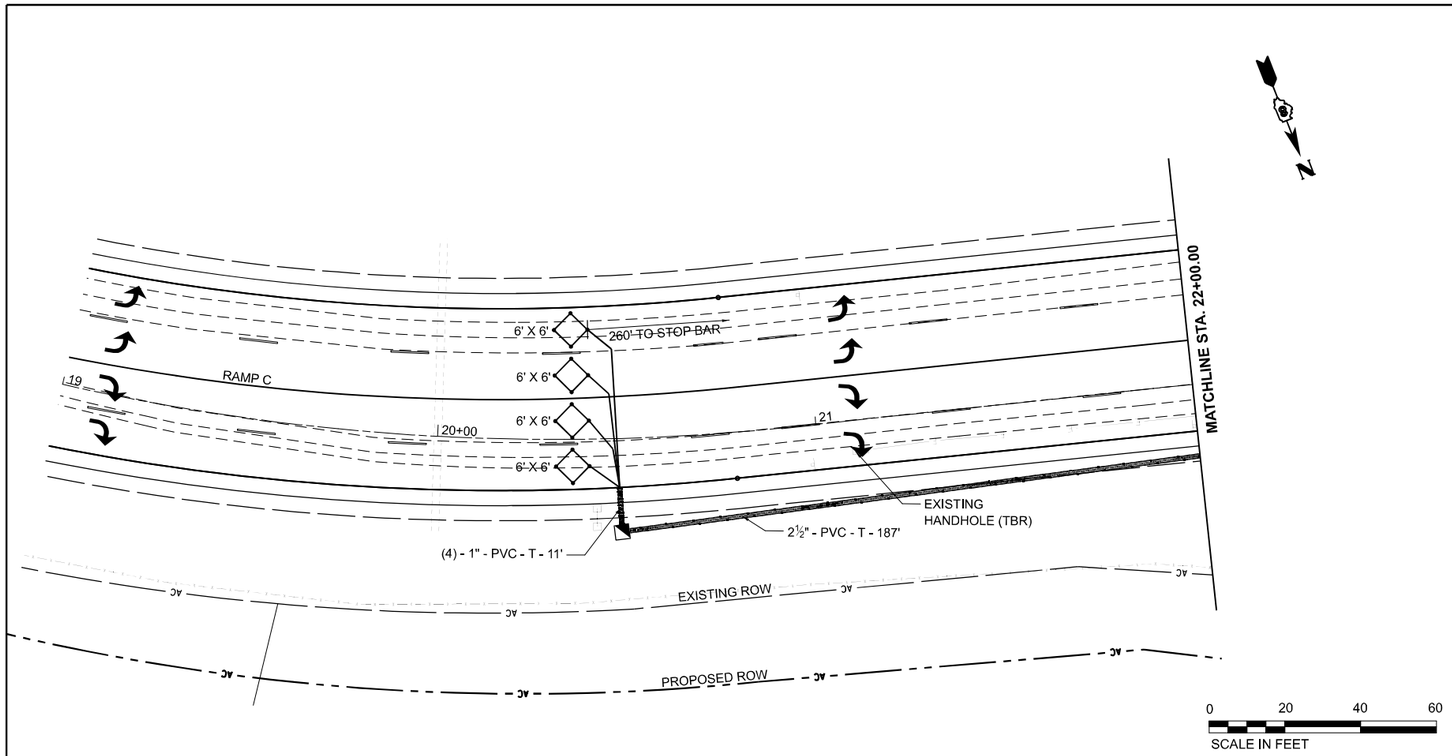

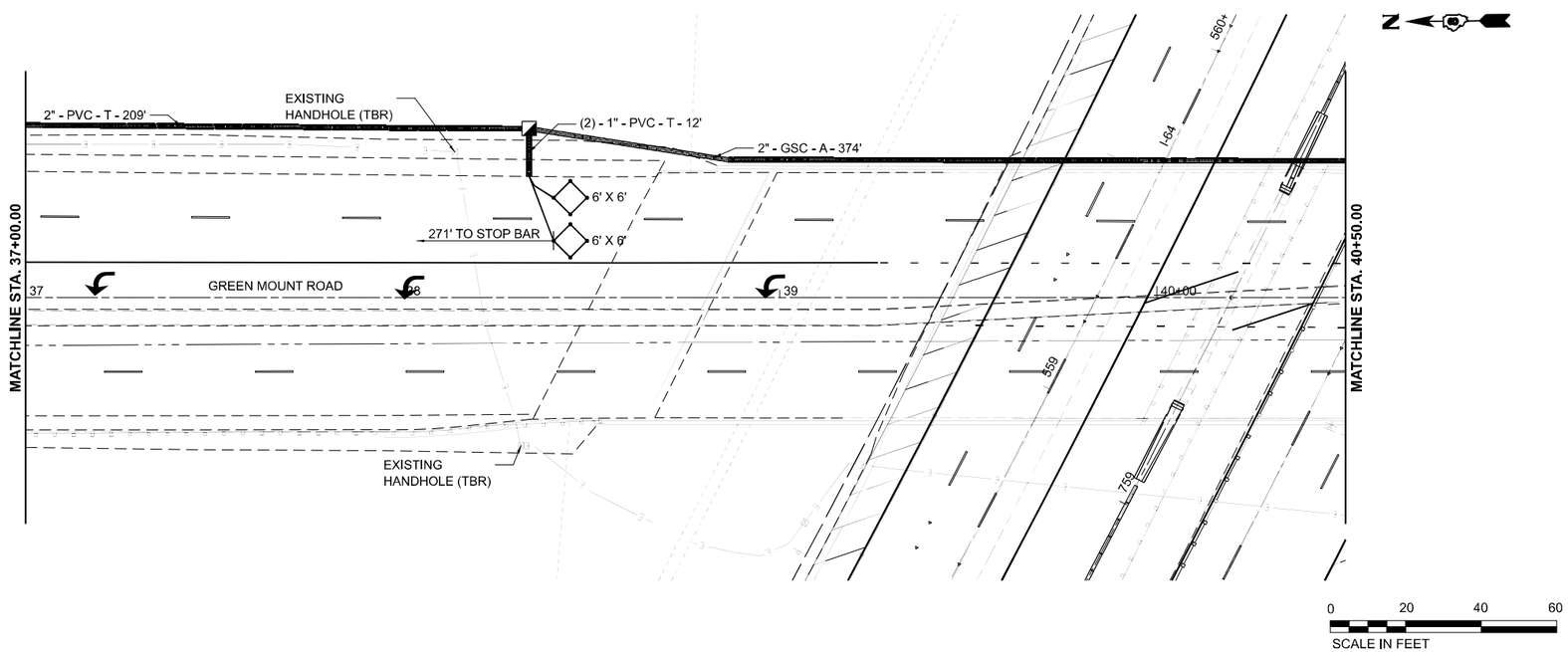

MODEL: $MODELNAME$
FILE NAME: pw://projectwise.volkert.com:volkertpw/Documents/Projects/116901 - PTB 195-059 - I-64 Widening and Reconstruction/CADD/CAD Sheets/D876K74-sht-TS.dgn

VOLKERT

USER NAME =	DESIGNED - JLS	REVISED -
	DRAWN - MAC	REVISED -
PLOT SCALE = 0.16666633 ' / in.	CHECKED - BRM	REVISED -
PLOT DATE = 4/25/2024	DATE - 9-10-24	REVISED -

STATE OF ILLINOIS
DEPARTMENT OF TRANSPORTATION

TRAFFIC SIGNAL PLANS
GREEN MOUNT ROAD AND I-64 WESTBOUND RAMPS

SCALE: 1"=20' | SHEET 15 OF 33 SHEETS | STA. | TO STA.

F.A.I. RTE.	SECTION	COUNTY	TOTAL SHEETS	SHEET NO.
64	82-7WRS-2	ST. CLAIR	691	401

CONTRACT NO. 76K74

ILLINOIS | FED. AID PROJECT

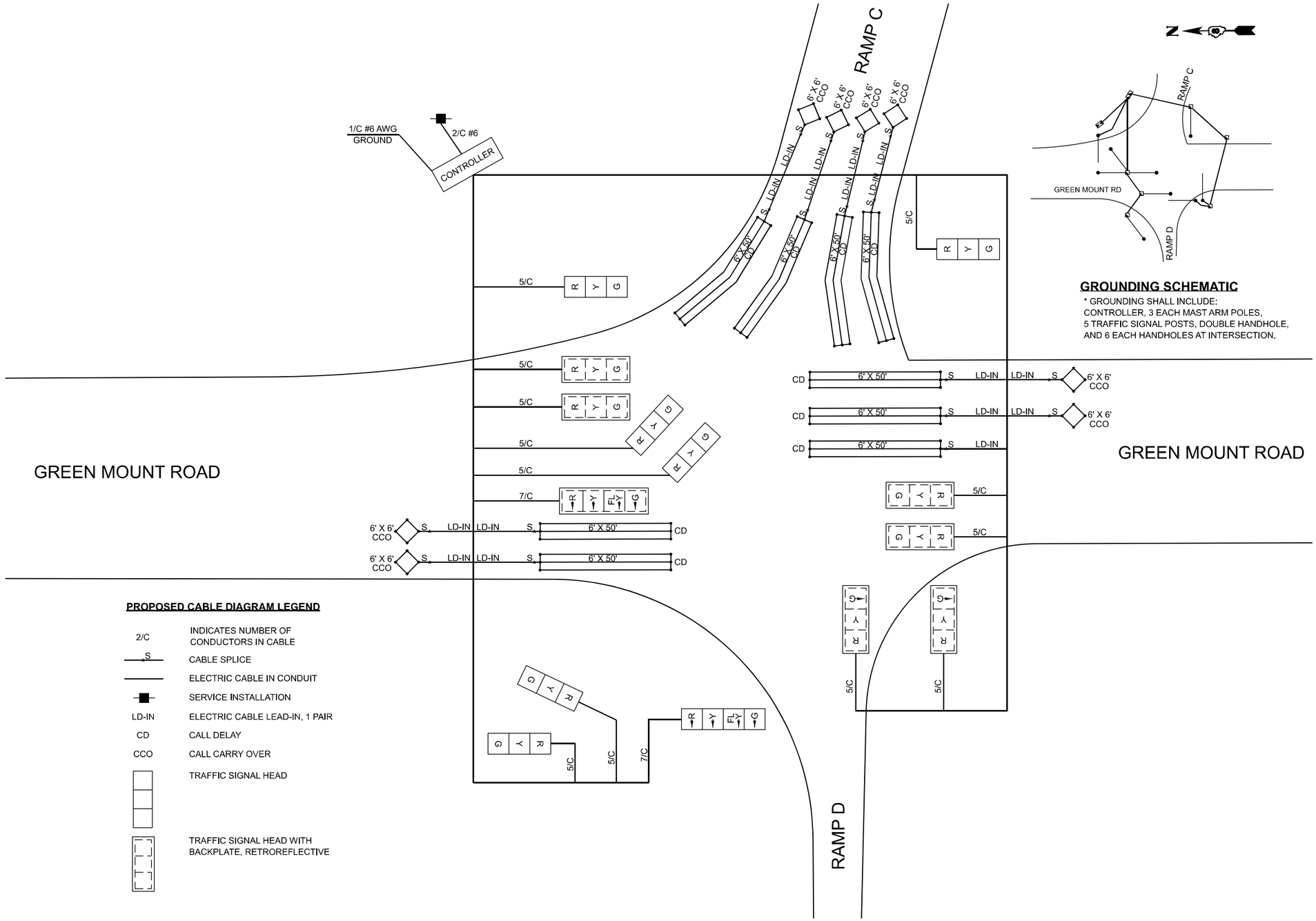

GROUNDING SCHEMATIC

* GROUNDING SHALL INCLUDE:
CONTROLLER, 3 EACH MAST ARM POLES,
5 TRAFFIC SIGNAL POSTS, DOUBLE HANDHOLE,
AND 6 EACH HANDHOLES AT INTERSECTION.

PROPOSED CABLE DIAGRAM LEGEND

2/C	INDICATES NUMBER OF CONDUCTORS IN CABLE
S	CABLE SPLICE
	ELECTRIC CABLE IN CONDUIT
	SERVICE INSTALLATION
LD-IN	ELECTRIC CABLE LEAD-IN, 1 PAIR
CD	CALL DELAY
CCO	CALL CARRY OVER
	TRAFFIC SIGNAL HEAD
	TRAFFIC SIGNAL HEAD WITH BACKPLATE, RETROREFLECTIVE

MODEL: Sheet + TS16 GMR Int 1 - VID Perm
FILE NAME: c:\volkert_gw_working\d\maggie.cox\d0282522\D76K74-sht-TS.dgn

VOLKERT

USER NAME = maggie.cox	DESIGNED - JLS	REVISED -	
	DRAWN - MAC	REVISED -	
PLOT SCALE = 0.16666633 ' / in.	CHECKED - BRM	REVISED -	
PLOT DATE = 4/25/2024	DATE - 9-10-24	REVISED -	

STATE OF ILLINOIS
DEPARTMENT OF TRANSPORTATION

CABLE DIAGRAM
GREEN MOUNT ROAD AND I-64 WESTBOUND RAMPS

SCALE: 1"=20' | SHEET 16 OF 33 SHEETS | STA. | TO STA.

F.A.I. RTE.	SECTION	COUNTY	TOTAL SHEETS	SHEET NO.
64	82-7WRS-2	ST. CLAIR	691	402

CONTRACT NO. 76K74

ILLINOIS | FED. AID PROJECT

ITEM	UNIT	TOTAL QUANTITY
SIGN PANEL - TYPE 1	SQ FT	16
SERVICE INSTALLATION, TYPE A	EACH	1
UNDERGROUND CONDUIT, GALVANIZED STEEL, 1" DIA.	FOOT	16
UNDERGROUND CONDUIT, GALVANIZED STEEL, 2" DIA.	FOOT	14
UNDERGROUND CONDUIT, GALVANIZED STEEL, 2 1/2" DIA.	FOOT	137
UNDERGROUND CONDUIT, GALVANIZED STEEL, 4" DIA.	FOOT	265
UNDERGROUND CONDUIT, GALVANIZED STEEL, 5" DIA.	FOOT	60
UNDERGROUND CONDUIT, PVC, 1" DIA.	FOOT	138
UNDERGROUND CONDUIT, PVC, 2" DIA.	FOOT	508
UNDERGROUND CONDUIT, PVC, 2 1/2" DIA.	FOOT	270
UNDERGROUND CONDUIT, PVC, 3" DIA.	FOOT	120
UNDERGROUND CONDUIT, PVC, 4" DIA.	FOOT	99
UNDERGROUND CONDUIT, PVC, 5" DIA.	FOOT	112
CONDUIT ATTACHED TO STRUCTURE, 2" DIA., GALVANIZED STEEL	FOOT	374
HANDHOLE	EACH	10
DOUBLE HANDHOLE	EACH	1
MAINTENANCE OF EXISTING TRAFFIC SIGNAL INSTALLATION	EACH	1
FULL-ACTUATED CONTROLLER AND TYPE IV CABINET	EACH	1
UNINTERRUPTABLE POWER SUPPLY, STANDARD	EACH	1
ELECTRIC CABLE IN CONDUIT, SIGNAL NO. 14 5C	FOOT	3669
ELECTRIC CABLE IN CONDUIT, SIGNAL NO. 14 7C	FOOT	499
ELECTRIC CABLE IN CONDUIT, LEAD-IN, NO. 14 1 PAIR	FOOT	4901
ELECTRIC CABLE IN CONDUIT, SERVICE, NO. 6 2C	FOOT	43
ELECTRIC CABLE IN CONDUIT, EQUIPMENT GROUNDING CONDUCTOR, NO 6 1C	FOOT	903
TRAFFIC SIGNAL POST, ALUMINUM 14 FT.	EACH	4
TRAFFIC SIGNAL POST, ALUMINUM 15 FT.	EACH	2
STEEL MAST ARM ASSEMBLY AND POLE, 24 FT.	EACH	1
STEEL MAST ARM ASSEMBLY AND POLE, 40 FT.	EACH	1
STEEL MAST ARM ASSEMBLY AND POLE, 48 FT.	EACH	1
CONCRETE FOUNDATION, TYPE A	FOOT	18
CONCRETE FOUNDATION, TYPE D	FOOT	3
CONCRETE FOUNDATION, TYPE E 30-INCH DIAMETER	FOOT	10
CONCRETE FOUNDATION, TYPE E 36-INCH DIAMETER	FOOT	26
SIGNAL HEAD, POLYCARBONATE, LED, 1-FACE, 3-SECTION, BRACKET MOUNTED	EACH	5
SIGNAL HEAD, POLYCARBONATE, LED, 1-FACE, 3-SECTION, MAST ARM MOUNTED	EACH	6
SIGNAL HEAD, POLYCARBONATE, LED, 1-FACE, 4-SECTION, MAST ARM MOUNTED	EACH	2
SIGNAL HEAD, POLYCARBONATE, LED, 2-FACE, 1-3 SECTION, 1-4 SECTION, BRACKET MOUNTED	EACH	1
TRAFFIC SIGNAL BACKPLATE, RETROREFLECTIVE	EACH	7
INDUCTIVE LOOP DETECTOR	EACH	17
DETECTOR LOOP, TYPE I	FOOT	2264
TEMPORARY TRAFFIC SIGNAL INSTALLATION	EACH	1
REMOVE ELECTRIC CABLE FROM CONDUIT	FOOT	4766
REMOVE EXISTING TRAFFIC SIGNAL EQUIPMENT	EACH	4
REMOVE EXISTING HANDHOLE	EACH	8
REMOVE EXISTING CONCRETE FOUNDATION	EACH	5
GPS CLOCK SYNC UNIT	EACH	1
VIDEO VEHICLE DETECTION SYSTEM - TEMPORARY	EACH	1
REMOVE EXISTING TRAFFIC CONTROLLER AND CABINET	EACH	1
REMOVE EXISTING SIGNAL HEAD	EACH	13

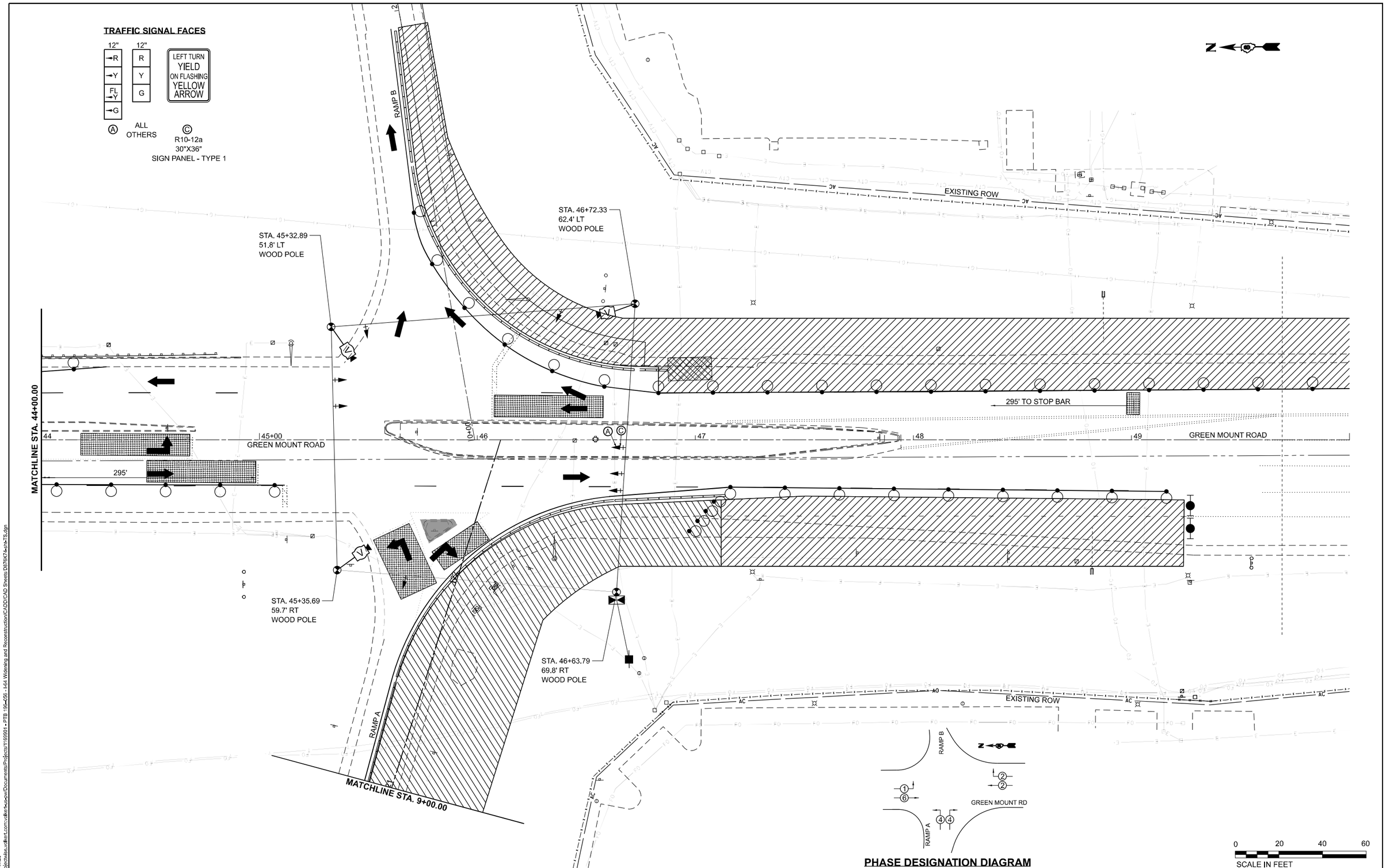

MODEL: $MODELNAME$
FILE NAME: pw://projectwise.volkert.com:volker-ks-pw/Documents/Projects/116990 • PTB 195-056 - I-64 Widening and Reconstruction/CADD/CAD Sheets D976K74-sht-TS.dgn

VOLKERT

USER NAME =	DESIGNED - JLS	REVISED -	
	DRAWN - MAC	REVISED -	
PLOT SCALE = 0.16666633 ' / in.	CHECKED - BRM	REVISED -	
PLOT DATE = 4/25/2024	DATE - 9-10-24	REVISED -	

STATE OF ILLINOIS
DEPARTMENT OF TRANSPORTATION

STAGE 1 - TEMPORARY TRAFFIC SIGNAL PLANS
GREEN MOUNT ROAD AND EASTBOUND I-64 RAMPS

SCALE: 1"=20' | SHEET 18 OF 33 SHEETS | STA. | TO STA.

F.A.I. RTE.	SECTION	COUNTY	TOTAL SHEETS	SHEET NO.
64	82-7WRS-2	ST. CLAIR	691	404

CONTRACT NO. 76K74

ILLINOIS | FED. AID PROJECT

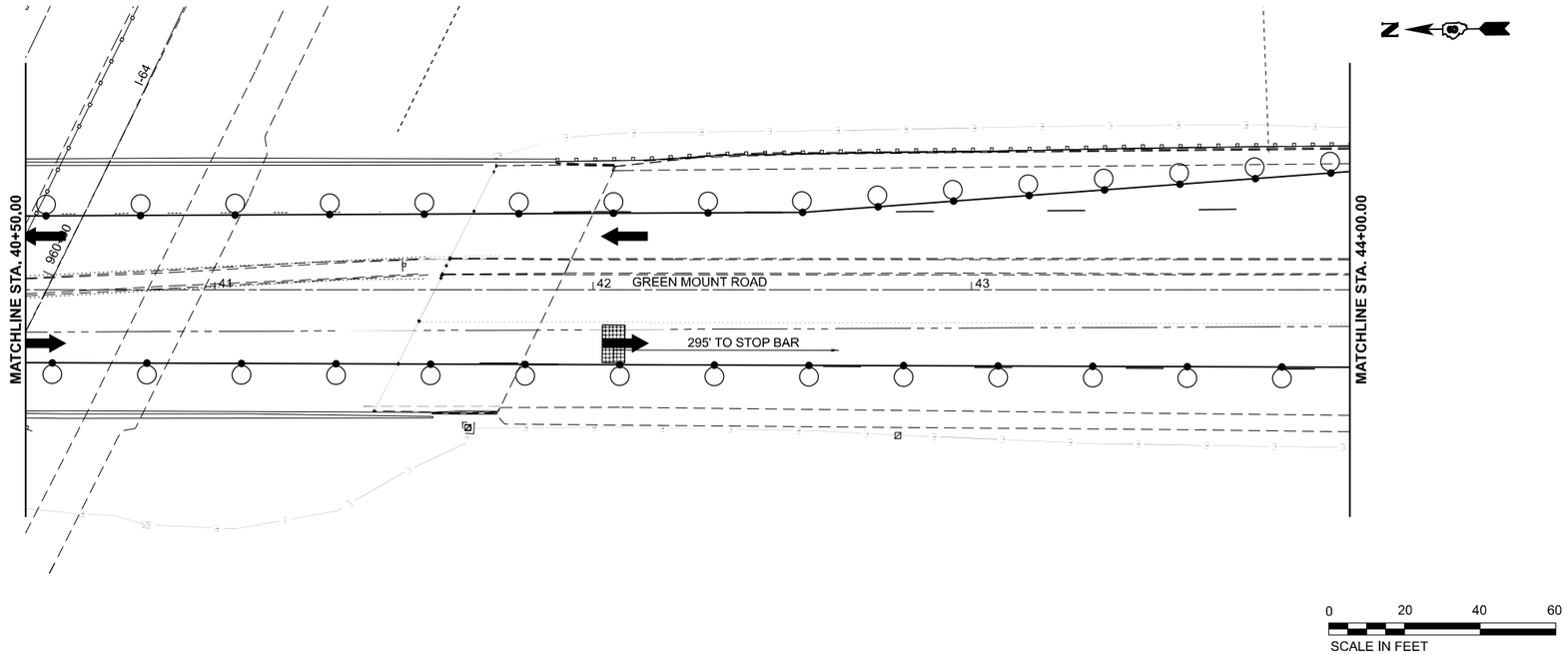

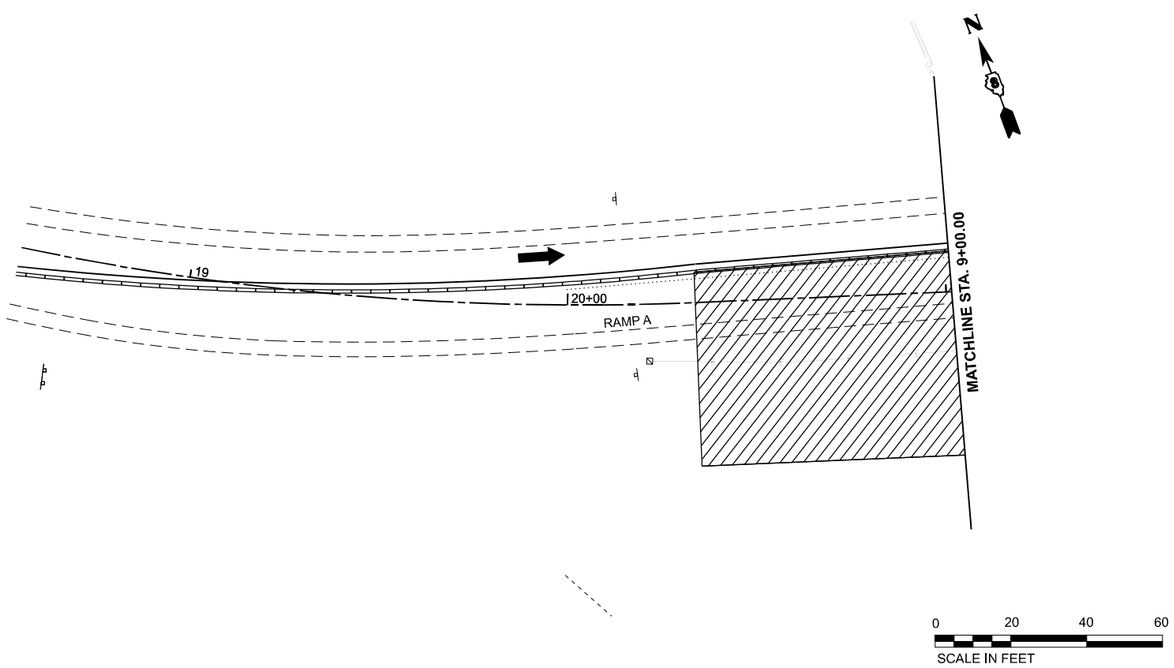

MODEL: $MODELNAME$
FILE NAME: pw://projectwise.volkert.com:volkertedow/Documents/Projects/1169901 - PTB 195-059 - I-64 Widening and Reconstruction/CADD/CAD Sheets/D876K74-sht-TS.dgn

VOLKERT

USER NAME =	DESIGNED - JLS	REVISED -
	DRAWN - MAC	REVISED -
PLOT SCALE = 0.16666633 ' / in.	CHECKED - BRM	REVISED -
PLOT DATE = 4/25/2024	DATE - 9-10-24	REVISED -

STATE OF ILLINOIS
DEPARTMENT OF TRANSPORTATION

STAGE 1 - TEMPORARY TRAFFIC SIGNAL PLANS
GREEN MOUNT ROAD AND EASTBOUND I-64 RAMPS

SCALE: 1"=20' | SHEET 19 OF 33 SHEETS | STA. | TO STA.

F.A.I. RTE.	SECTION	COUNTY	TOTAL SHEETS	SHEET NO.
64	82-7WRS-2	ST. CLAIR	691	405
		CONTRACT NO. 76K74		
	ILLINOIS	FED. AID PROJECT		

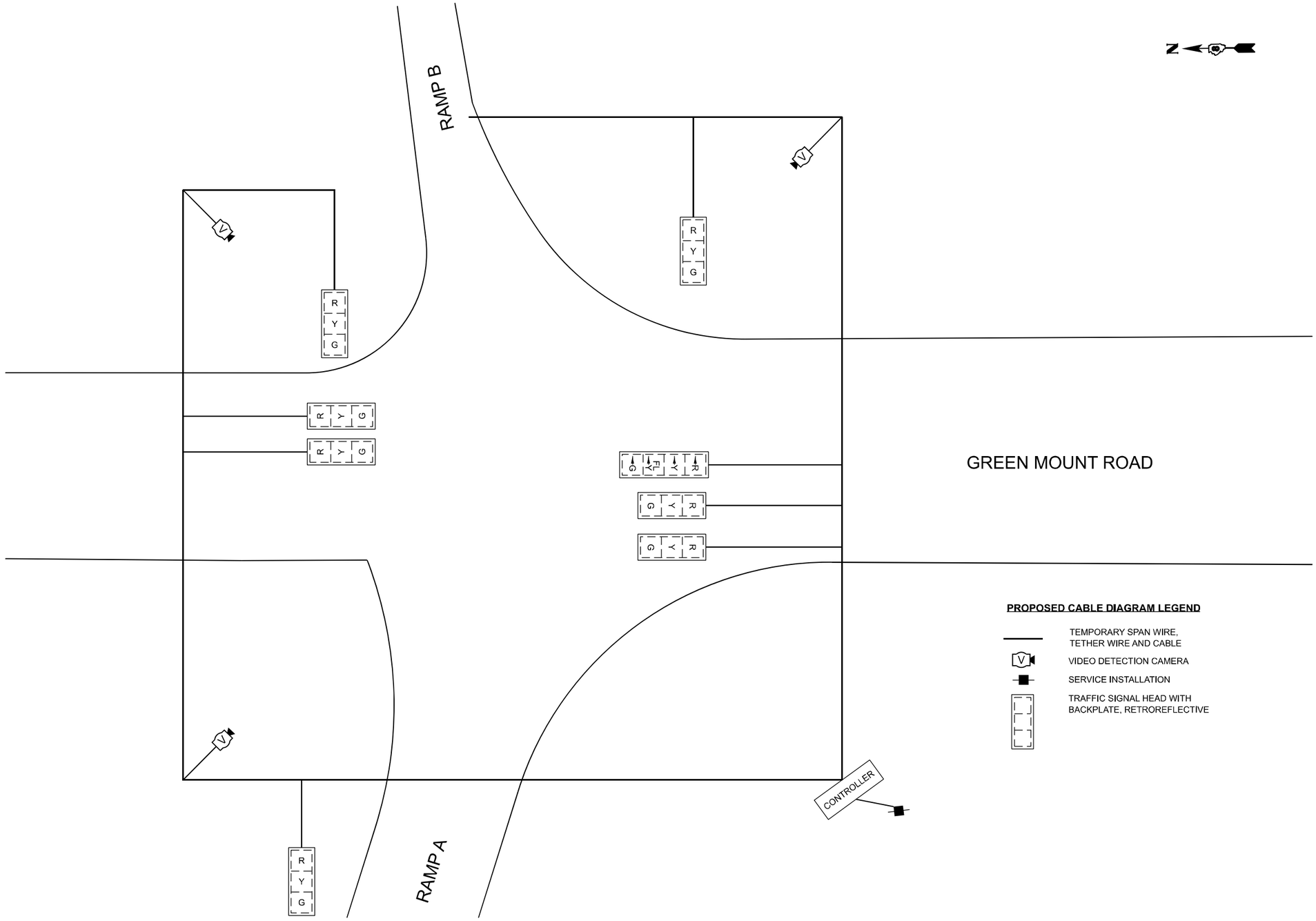

PROPOSED CABLE DIAGRAM LEGEND

- TEMPORARY SPAN WIRE, TETHER WIRE AND CABLE
- VIDEO DETECTION CAMERA
- SERVICE INSTALLATION
- TRAFFIC SIGNAL HEAD WITH BACKPLATE, RETROREFLECTIVE

MODEL: Sheet - TS20 GMR Int 2 - VID St 1
FILE NAME: c:\volkert_dgn_workingdir\maggie.cox\d0282522\D76K74-sht-HTS.dgn

VOLKERT

USER NAME = maggie.cox	DESIGNED - JLS	REVISED -	
	DRAWN - MAC	REVISED -	
PLOT SCALE = 0.16666633 ' / in.	CHECKED - BRM	REVISED -	
PLOT DATE = 4/25/2024	DATE - 9-10-24	REVISED -	

STATE OF ILLINOIS
DEPARTMENT OF TRANSPORTATION

STAGE 1 - CABLE DIAGRAM
GREEN MOUNT ROAD AND I-64 EASTBOUND RAMPS

SCALE: 1"=20' | SHEET 20 OF 33 SHEETS | STA. | TO STA.

F.A.I. RTE.	SECTION	COUNTY	TOTAL SHEETS	SHEET NO.
64	82-7WRS-2	ST. CLAIR	691	406
		CONTRACT NO. 76K74		
	ILLINOIS	FED. AID PROJECT		

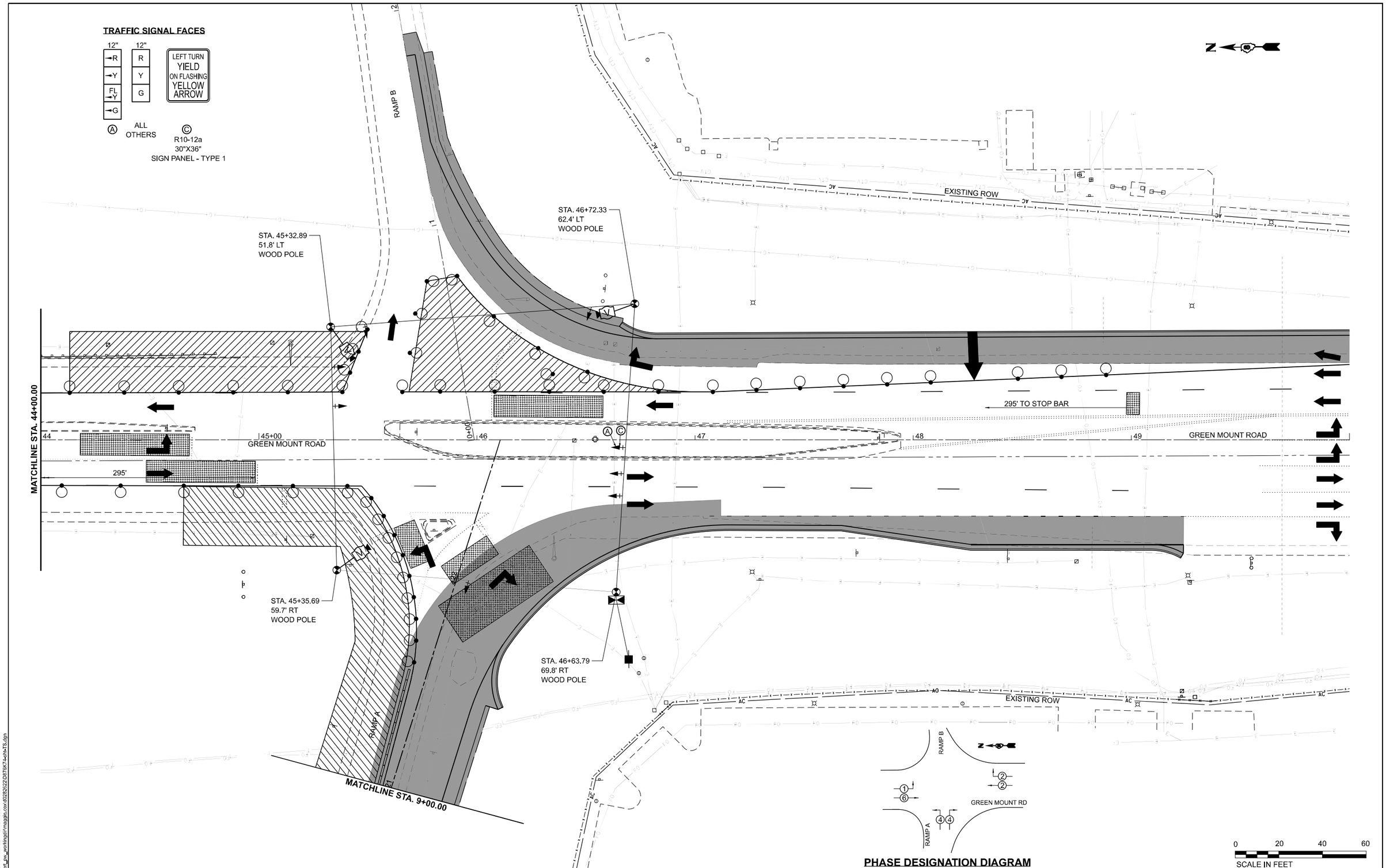

MODEL: Sheet - TS21 GMR Int 2 - Plan 2 - St 2
FILE NAME: c:\volkert_dgn_working\maggie.cox\d7282022D76K74-sh-TS.dgn

VOLKERT

USER NAME = maggie.cox	DESIGNED - JLS	REVISED -	
	DRAWN - MAC	REVISED -	
PLOT SCALE = 0.16666633 ' / in.	CHECKED - BRM	REVISED -	
PLOT DATE = 4/25/2024	DATE - 9-10-24	REVISED -	

STATE OF ILLINOIS
DEPARTMENT OF TRANSPORTATION

STAGE 2 - TEMPORARY TRAFFIC SIGNAL PLANS
GREEN MOUNT ROAD AND EASTBOUND I-64 RAMPS

SCALE: 1"=20' | SHEET 21 OF 33 SHEETS | STA. | TO STA.

F.A.I. RTE.	SECTION	COUNTY	TOTAL SHEETS	SHEET NO.
64	82-7WRS-2	ST. CLAIR	691	407
		CONTRACT NO. 76K74		
	ILLINOIS	FED. AID PROJECT		

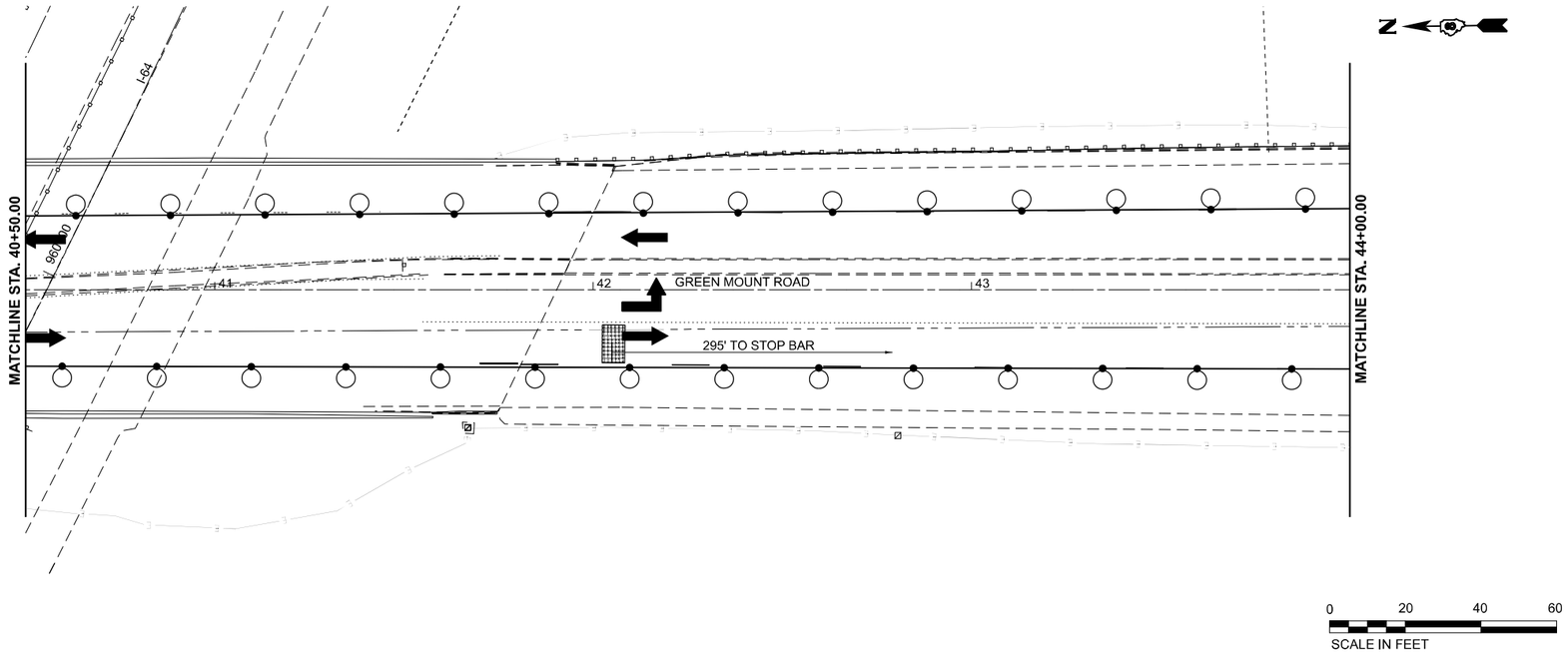

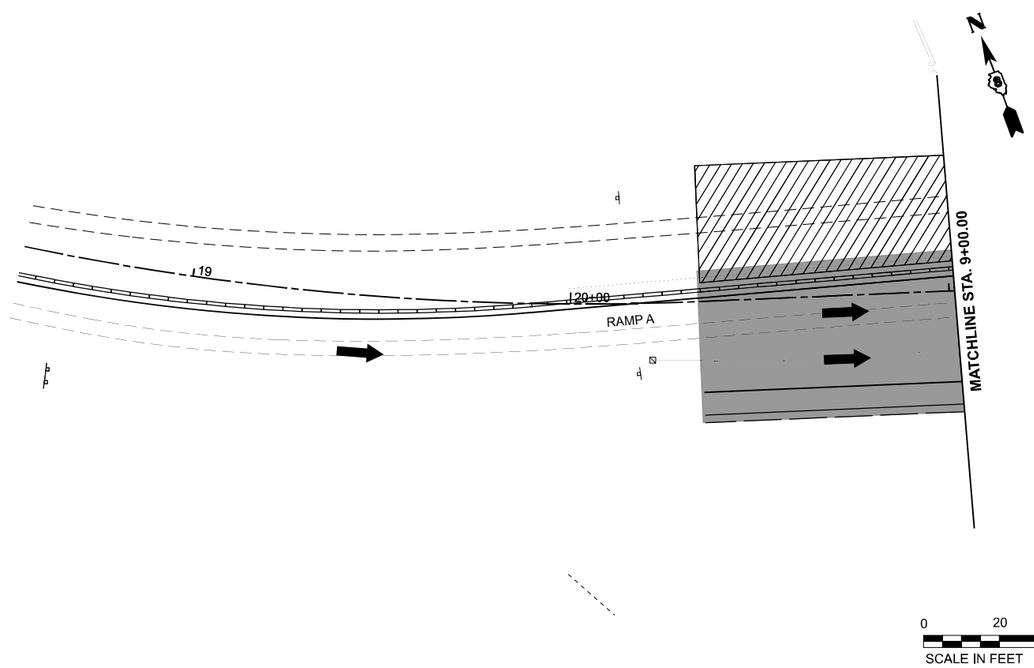

MODEL: Sheet - TS22 GMR lnt 2 - Plan 5& - St 2
FILE NAME: c:\volkert_dev_workingdir\maggie.cox\d28322\D076K7-sht-TS.dgn

VOLKERT

USER NAME = maggie.cox	DESIGNED - JLS	REVISED -	
	DRAWN - MAC	REVISED -	
PLOT SCALE = 0.16666633 ' / in.	CHECKED - BRM	REVISED -	
PLOT DATE = 4/25/2024	DATE - 9-10-24	REVISED -	

STATE OF ILLINOIS
DEPARTMENT OF TRANSPORTATION

STAGE 2 - TEMPORARY TRAFFIC SIGNAL PLANS
GREEN MOUNT ROAD AND I-64 EASTBOUND RAMPS

SCALE: 1"=20' | SHEET 22 OF 33 SHEETS | STA. TO STA.

F.A.I. RTE.	SECTION	COUNTY	TOTAL SHEETS	SHEET NO.
64	82-7WRS-2	ST. CLAIR	691	408
		CONTRACT NO. 76K74		
		ILLINOIS FED. AID PROJECT		

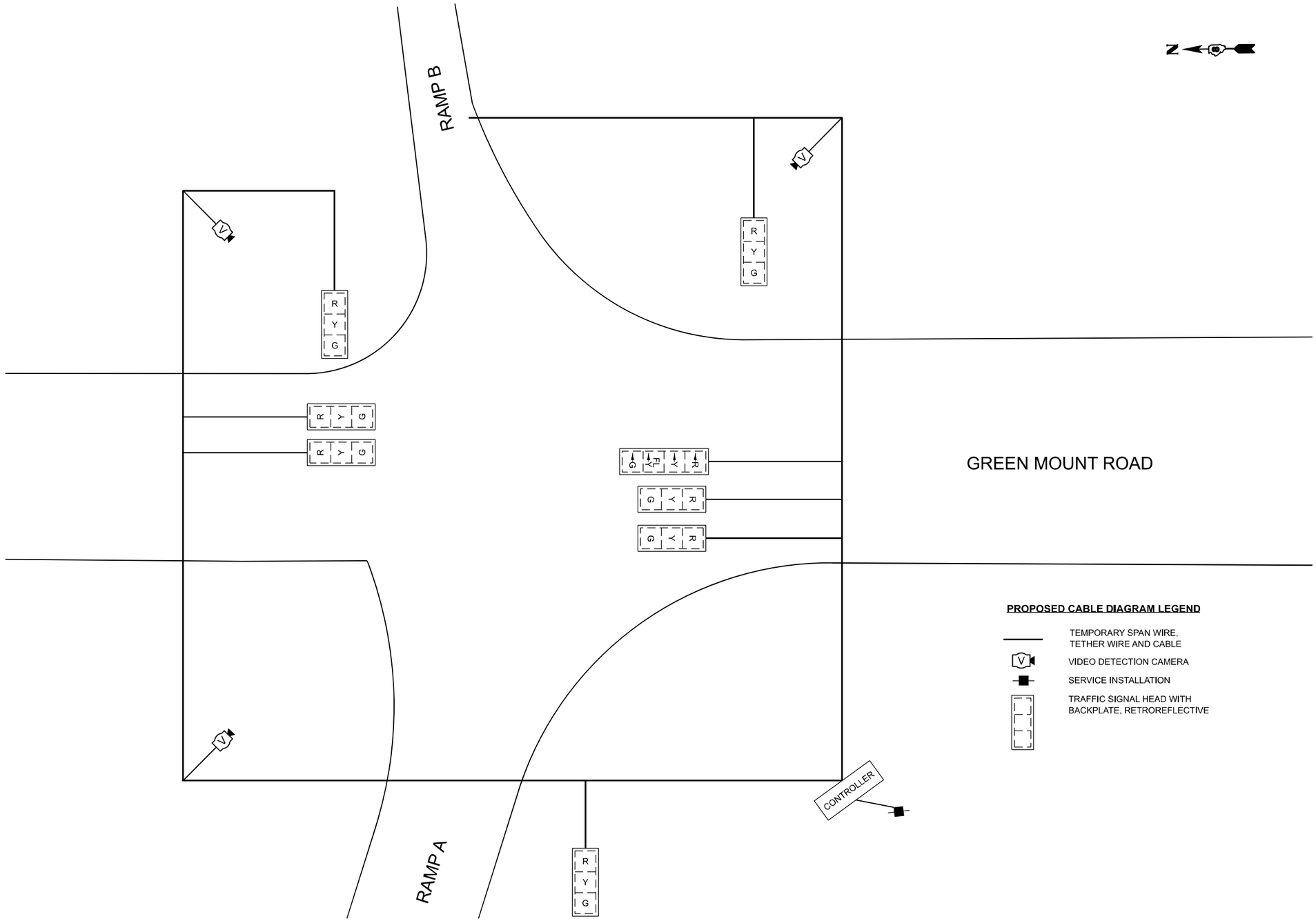

PROPOSED CABLE DIAGRAM LEGEND

- TEMPORARY SPAN WIRE, TETHER WIRE AND CABLE
- VIDEO DETECTION CAMERA
- SERVICE INSTALLATION
- TRAFFIC SIGNAL HEAD WITH BACKPLATE, RETROREFLECTIVE

MODEL: Sheet - TS23 GMR Int 2 - VID St 2
FILE NAME: c:\volkert_pw_working\jlsmaggie.cox\d0282622\D76K74-sht-TS.dgn

VOLKERT

USER NAME = maggie.cox	DESIGNED - JLS	REVISED -	
	DRAWN - MAC	REVISED -	
PLOT SCALE = 0.16666633 ' / in.	CHECKED - BRM	REVISED -	
PLOT DATE = 4/25/2024	DATE - 9-10-24	REVISED -	

STATE OF ILLINOIS
DEPARTMENT OF TRANSPORTATION

STAGE 2 - CABLE DIAGRAM
GREEN MOUNT ROAD AND I-64 EASTBOUND RAMPS

SCALE: 1"=20' | SHEET 23 OF 33 SHEETS | STA. | TO STA.

F.A.I. RTE.	SECTION	COUNTY	TOTAL SHEETS	SHEET NO.
64	82-7WRS-2	ST. CLAIR	691	409
		CONTRACT NO. 76K74		
	ILLINOIS	FED. AID PROJECT		

TRAFFIC SIGNAL FACES

12" 12"

R R
Y Y
FL Y G
G

LEFT TURN YIELD ON FLASHING YELLOW ARROW

Ⓐ ALL OTHERS

Ⓒ R10-12a 30"X36" SIGN PANEL - TYPE 1

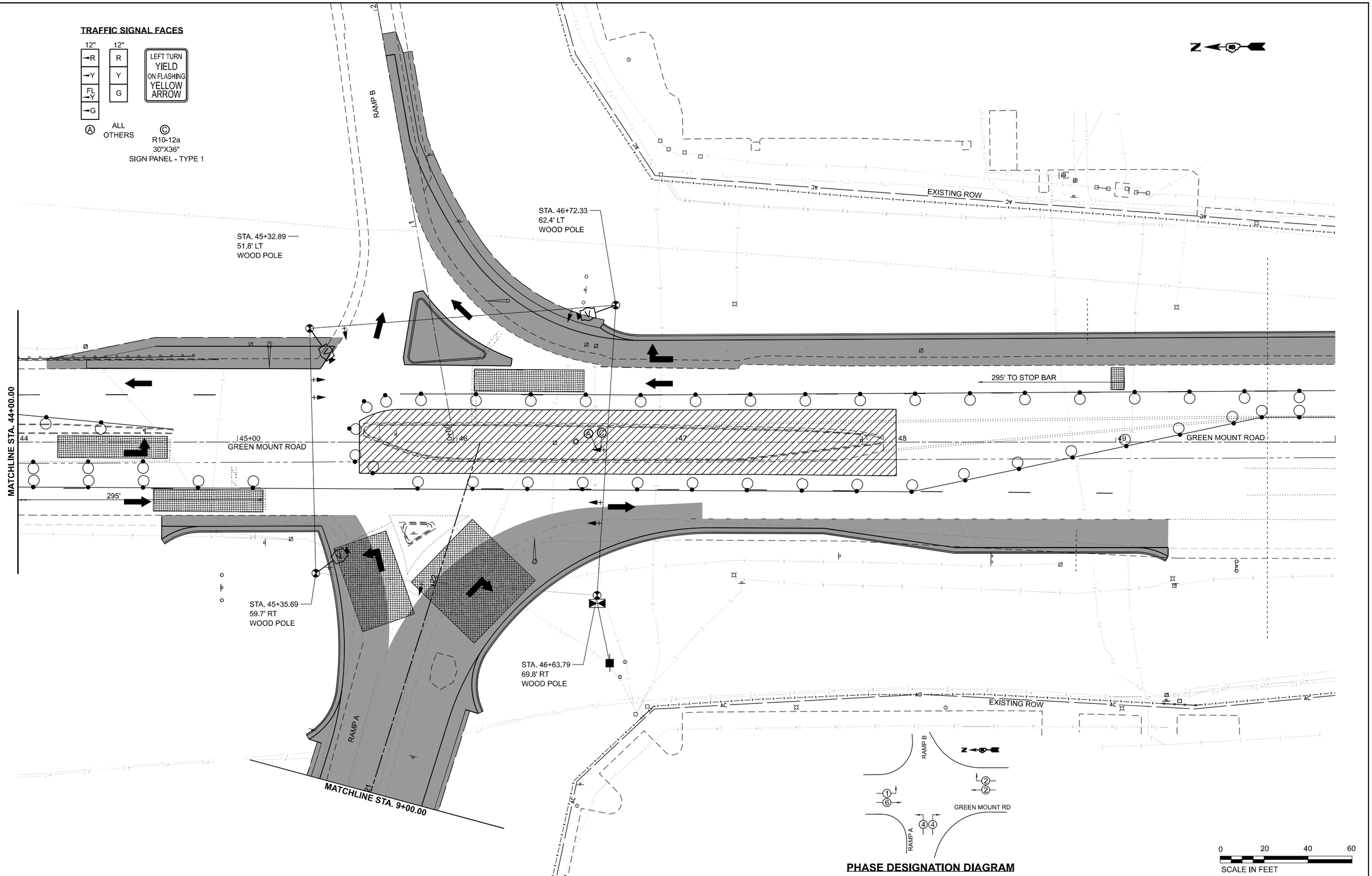

PHASE DESIGNATION DIAGRAM

MODEL: Sheet - TS24 GMR Int 2 - Plan 2 - St 3
FILE NAME: C:\volkert_gw_working\r\maggie.cox\d0262022\D76K74-ph-TS.dgn

VOLKERT

USER NAME = maggie.cox	DESIGNED - JLS	REVISED -	
	DRAWN - MAC	REVISED -	
PLOT SCALE = 0.16666633 ' / in.	CHECKED - BRM	REVISED -	
PLOT DATE = 4/25/2024	DATE - 9-10-24	REVISED -	

STATE OF ILLINOIS
DEPARTMENT OF TRANSPORTATION

STAGE 3 - TEMPORARY TRAFFIC SIGNAL PLANS
GREEN MOUNT ROAD AND EASTBOUND I-64 RAMPS

SCALE: 1"=20' | SHEET 24 OF 33 SHEETS | STA. TO STA.

F.A.I. RTE.	SECTION	COUNTY	TOTAL SHEETS	SHEET NO.
64	82-7WRS-2	ST. CLAIR	691	410
		CONTRACT NO. 76K74		
	ILLINOIS	FED. AID PROJECT		

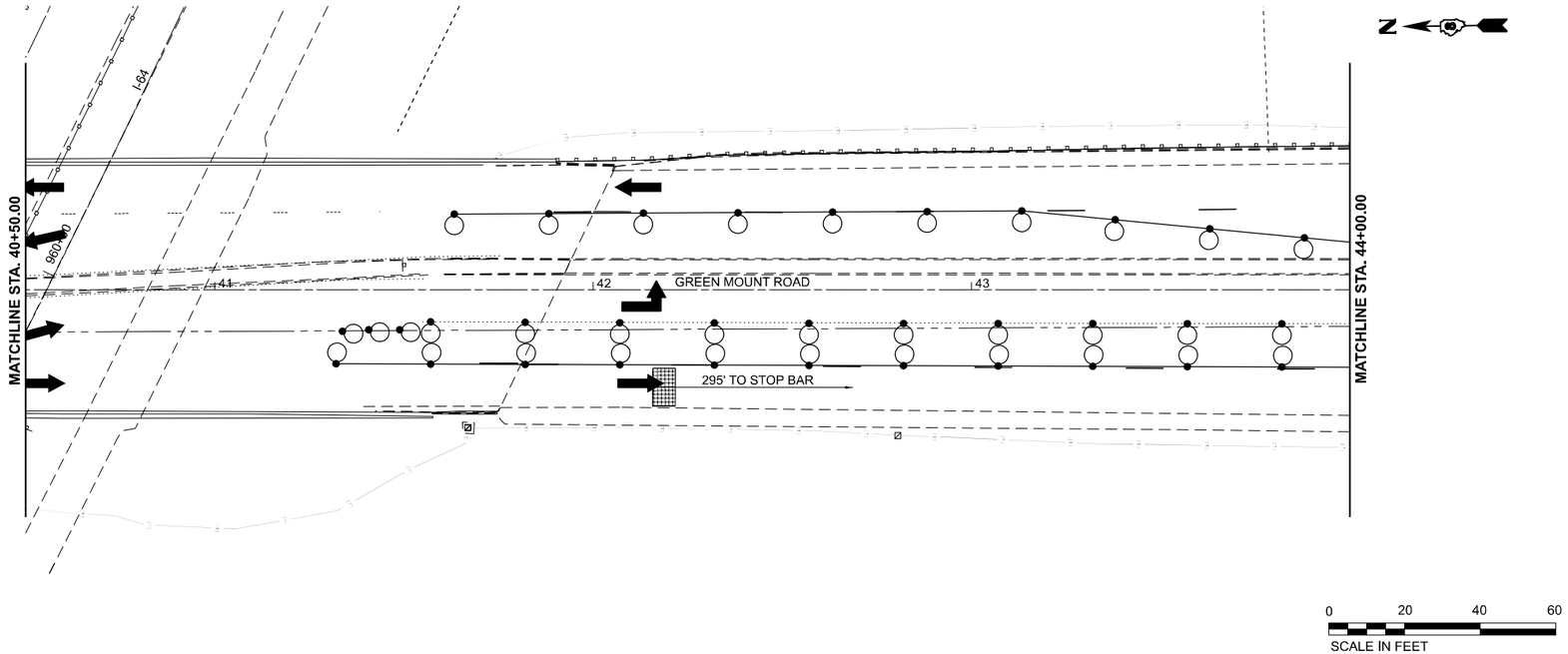

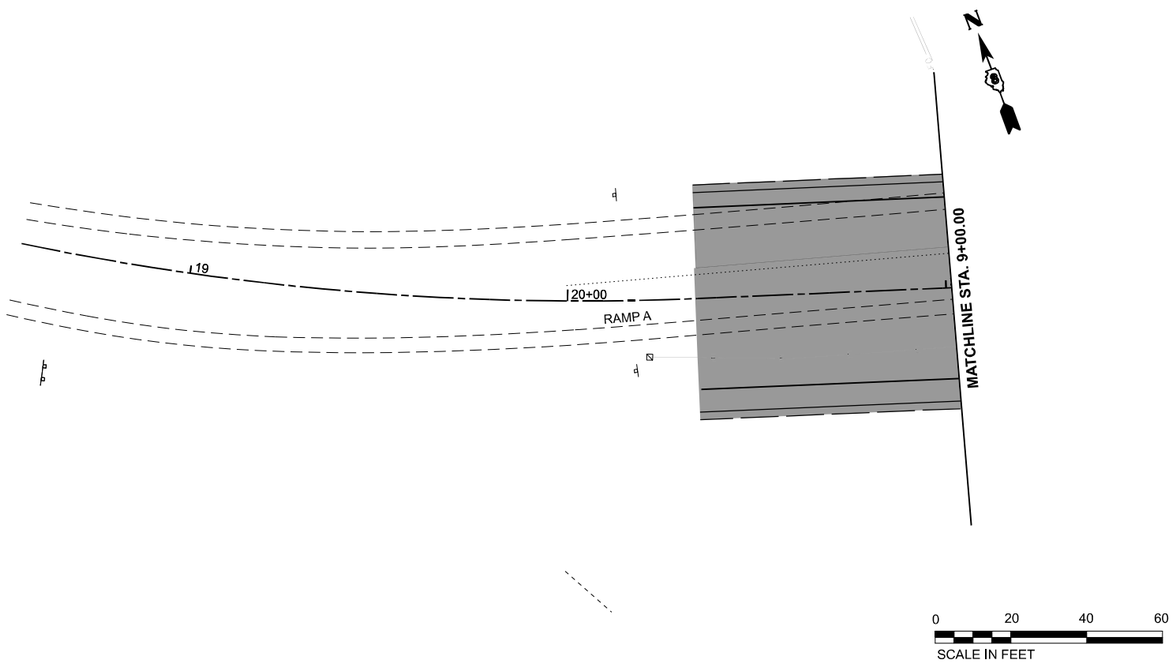

MODEL: Sheet - TS25 GMR lnt 2 - Plan 5di - St 3
FILE NAME: c:\volkert_dw_workingdir\maggie.cox\d2282022D75K7-sdhxTS.dgn

VOLKERT

USER NAME = maggie.cox	DESIGNED - JLS	REVISED -	
	DRAWN - MAC	REVISED -	
PLOT SCALE = 0.16666633 ' / in.	CHECKED - BRM	REVISED -	
PLOT DATE = 4/25/2024	DATE - 9-10-24	REVISED -	

STATE OF ILLINOIS
DEPARTMENT OF TRANSPORTATION

STAGE 3 - TEMPORARY TRAFFIC SIGNAL PLANS
GREEN MOUNT ROAD AND EASTBOUND I-64 RAMPS

SCALE: 1"=20' | SHEET 25 OF 33 SHEETS | STA. | TO STA.

F.A.I. RTE.	SECTION	COUNTY	TOTAL SHEETS	SHEET NO.
64	82-7WRS-2	ST. CLAIR	691	411
		CONTRACT NO. 76K74		
	ILLINOIS	FED. AID PROJECT		

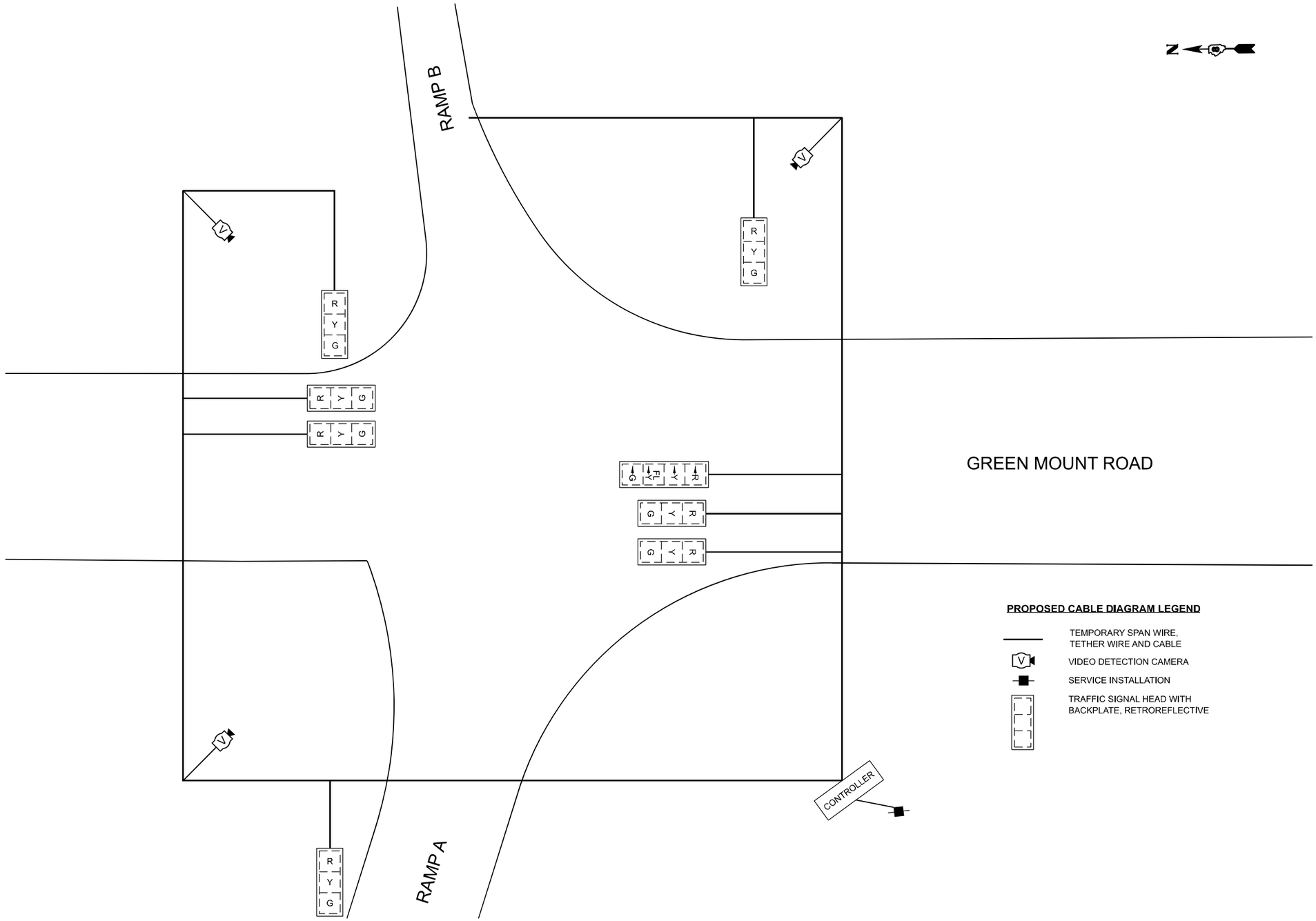

PROPOSED CABLE DIAGRAM LEGEND

- TEMPORARY SPAN WIRE, TETHER WIRE AND CABLE
- VIDEO DETECTION CAMERA
- SERVICE INSTALLATION
- TRAFFIC SIGNAL HEAD WITH BACKPLATE, RETROREFLECTIVE

MODEL: Sheet - TS26 GMR lnt 2 - WD St 3
FILE NAME: c:\volkert_inc_workingdir\maggie.cox\d28262\D76K74-ilht-TS.dgn

VOLKERT

USER NAME = maggie.cox	DESIGNED - JLS	REVISED -	
	DRAWN - MAC	REVISED -	
PLOT SCALE = 0.16666633 ' / in.	CHECKED - BRM	REVISED -	
PLOT DATE = 4/25/2024	DATE - 9-10-24	REVISED -	

STATE OF ILLINOIS
DEPARTMENT OF TRANSPORTATION

STAGE 3 - CABLE DIAGRAM
GREEN MOUNT ROAD AND I-64 EASTBOUND RAMPS

SCALE: 1"=20' | SHEET 26 OF 33 SHEETS | STA. | TO STA.

F.A.I. RTE.	SECTION	COUNTY	TOTAL SHEETS	SHEET NO.
64	82-7WRS-2	ST. CLAIR	691	412
		CONTRACT NO. 76K74		
		ILLINOIS	FED. AID PROJECT	

TRAFFIC SIGNAL FACES

12" 12"

R
Y
FL Y
G

R
Y
G

LEFT TURN
YIELD
ON FLASHING
YELLOW
ARROW

Ⓐ ALL OTHERS

Ⓒ R10-12a
30"X36"
SIGN PANEL - TYPE 1

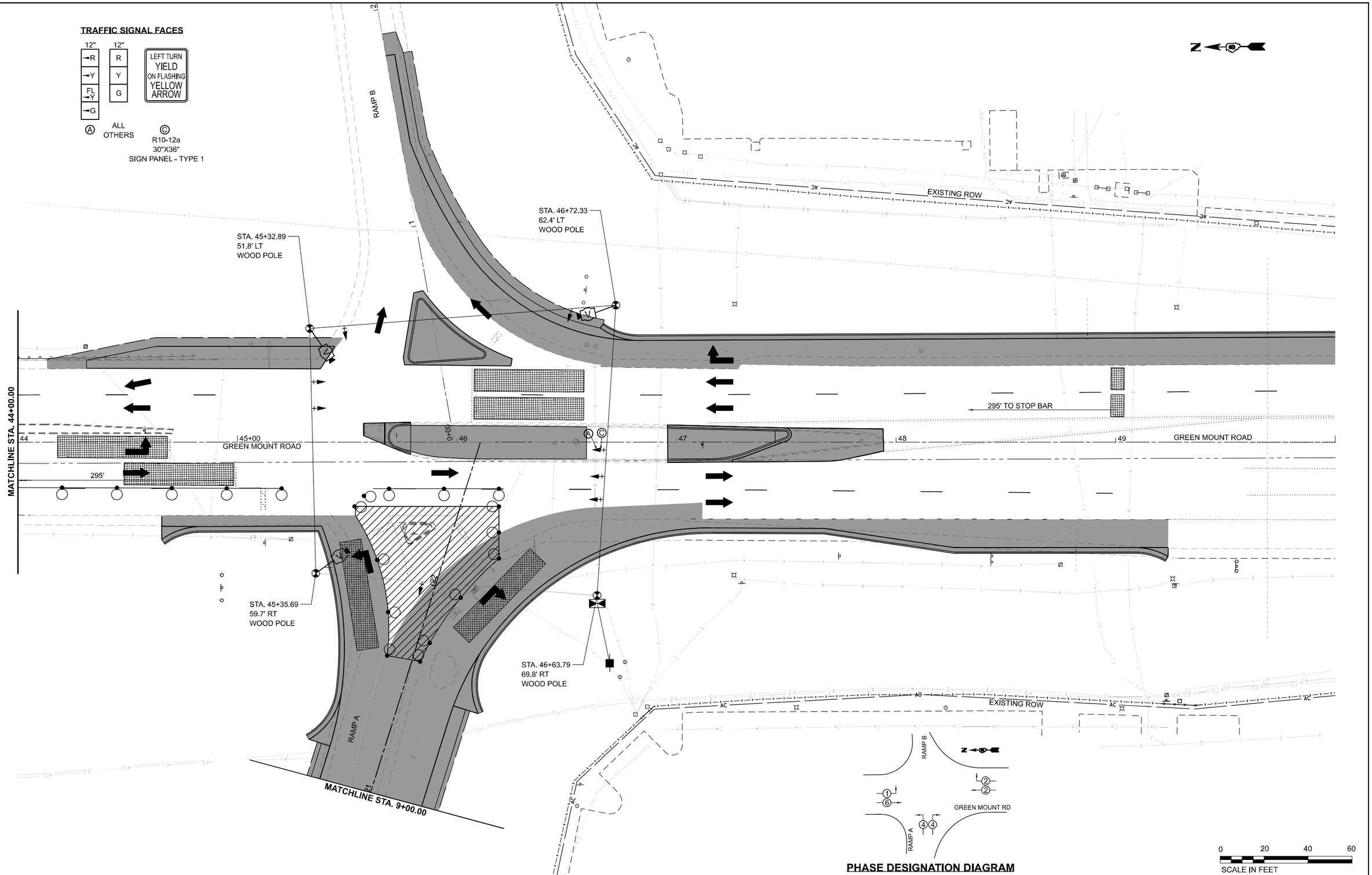

PHASE DESIGNATION DIAGRAM

MODEL: Sheet - TS27 GMR Int 2 - Plan 2 - St 4
FILE NAME: c:\volkert_dev_workingdir\maggie.cox\d0282522\D76K74-sht-ts27S.dgn

VOLKERT

USER NAME = maggie.cox	DESIGNED - JLS	REVISED -	
	DRAWN - MAC	REVISED -	
PLOT SCALE = 0.16666633 ' / in.	CHECKED - BRM	REVISED -	
PLOT DATE = 4/25/2024	DATE - 9-10-24	REVISED -	

STATE OF ILLINOIS
DEPARTMENT OF TRANSPORTATION

STAGE 4 - TEMPORARY TRAFFIC SIGNAL PLANS
GREEN MOUNT ROAD AND EASTBOUND I-64 RAMPS

SCALE: 1"=20' | SHEET 27 OF 33 SHEETS | STA. | TO STA.

F.A.I. RTE.	SECTION	COUNTY	TOTAL SHEETS	SHEET NO.
64	82-7WRS-2	ST. CLAIR	691	413
		CONTRACT NO. 76K74		
	ILLINOIS	FED. AID PROJECT		

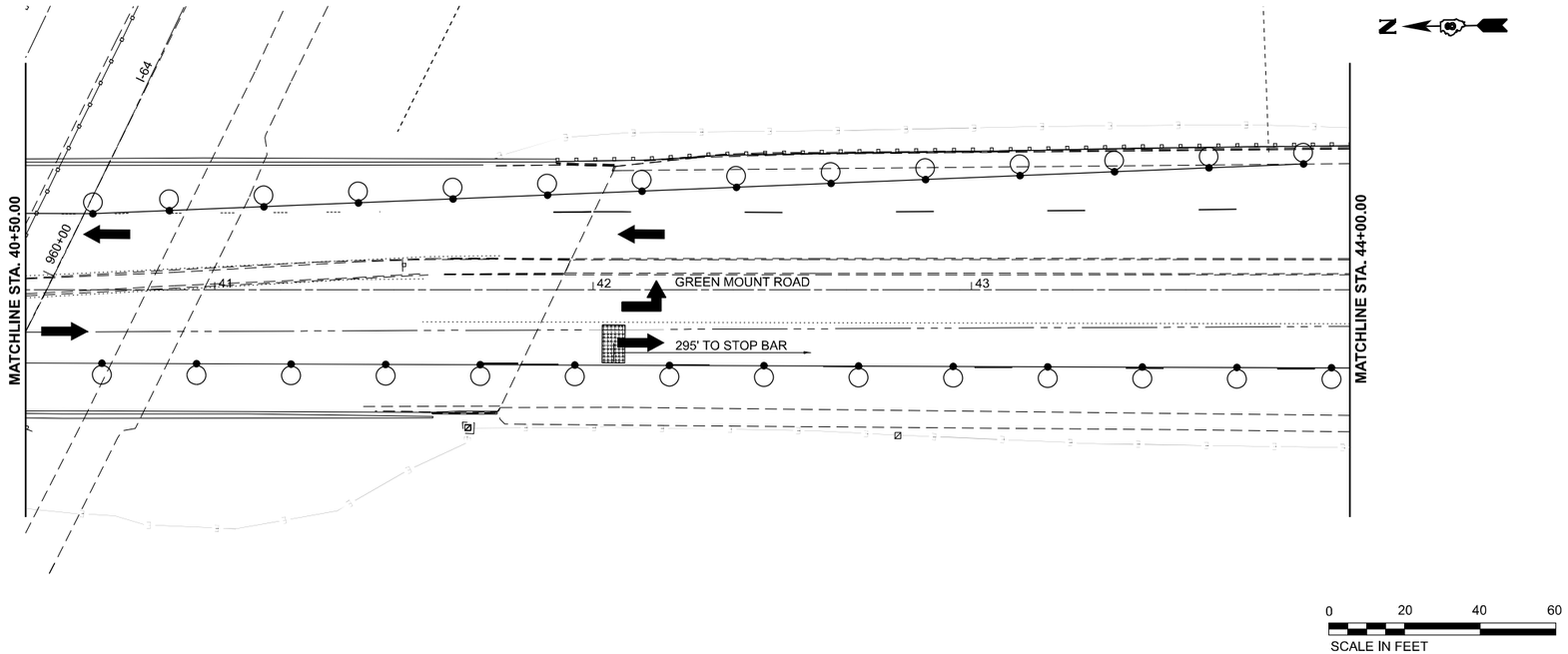

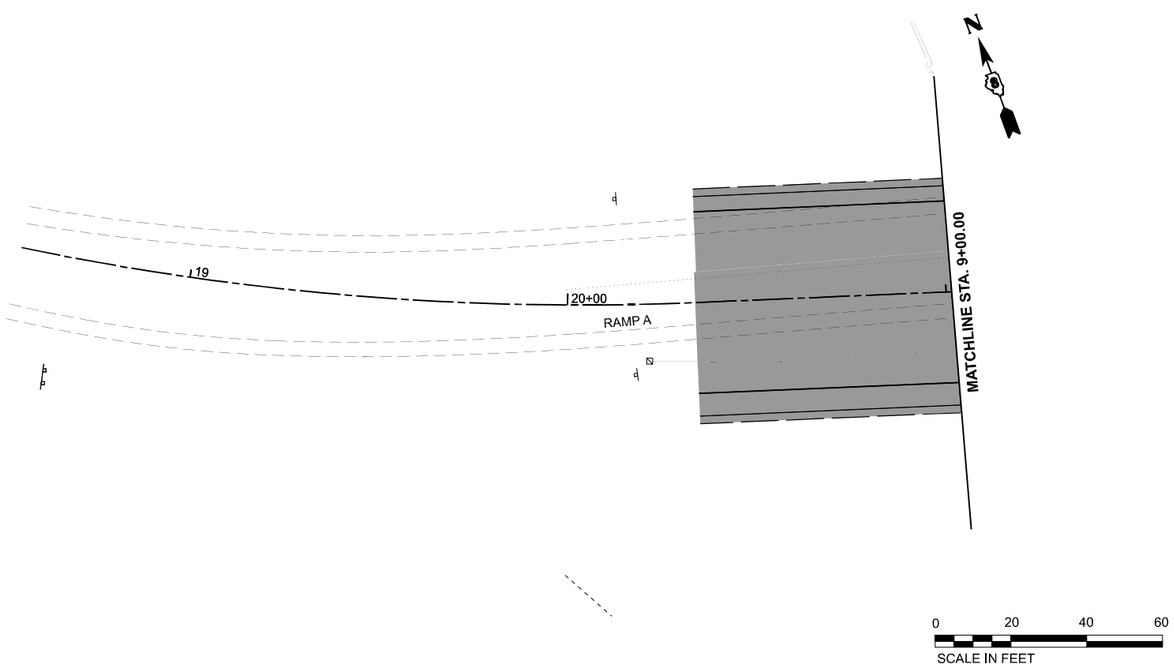

MODEL: Sheet - TS28 GMR lnt 2 - Plan 5di - St 4
FILE NAME: c:\volkert_dev_workingdir\maggie.cox\d28262\D076K74eltsTS.dgn

VOLKERT

USER NAME = maggie.cox	DESIGNED - JLS	REVISED -	
	DRAWN - MAC	REVISED -	
PLOT SCALE = 0.16666633 ' / in.	CHECKED - BRM	REVISED -	
PLOT DATE = 4/25/2024	DATE - 9-10-24	REVISED -	

STATE OF ILLINOIS
DEPARTMENT OF TRANSPORTATION

STAGE 4 - TEMPORARY TRAFFIC SIGNAL PLANS
GREEN MOUNT ROAD AND EASTBOUND I-64 RAMPS

SCALE: 1"=20' | SHEET 28 OF 33 SHEETS | STA. TO STA.

F.A.I. RTE.	SECTION	COUNTY	TOTAL SHEETS	SHEET NO.
64	82-7WRS-2	ST. CLAIR	691	414
		CONTRACT NO. 76K74		
	ILLINOIS	FED. AID PROJECT		

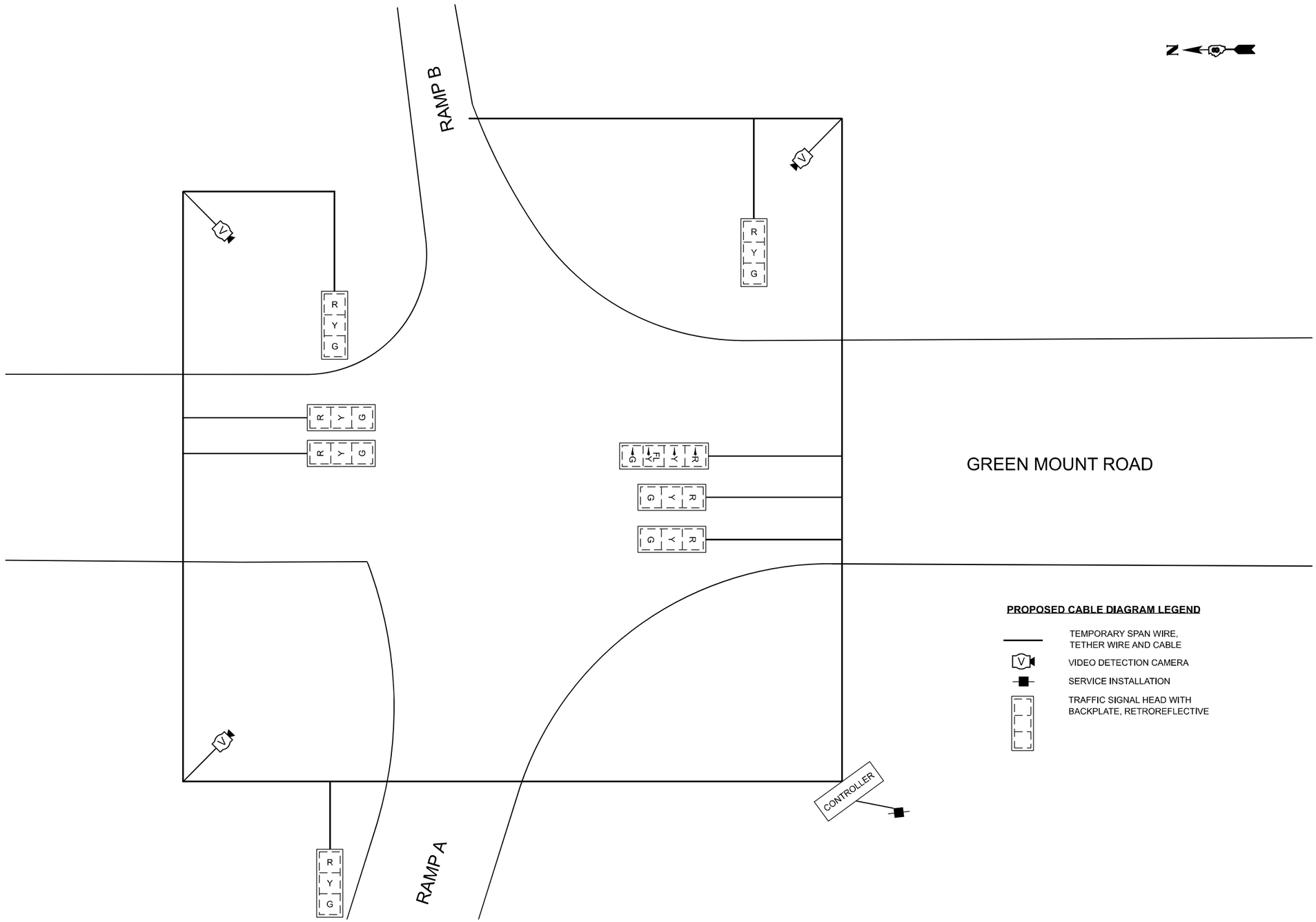

PROPOSED CABLE DIAGRAM LEGEND

- TEMPORARY SPAN WIRE, TETHER WIRE AND CABLE
- VIDEO DETECTION CAMERA
- SERVICE INSTALLATION
- TRAFFIC SIGNAL HEAD WITH BACKPLATE, RETROREFLECTIVE

MODEL: Sheet - TS29 GMR Int 2 - WD St 4
FILE NAME: c:\volkert_gw_workingdir\maggie.cox\d0283522\D76K74-ph-TS.dgn

VOLKERT

USER NAME = maggie.cox	DESIGNED - JLS	REVISED -	
	DRAWN - MAC	REVISED -	
PLOT SCALE = 0.16666633 ' / in.	CHECKED - BRM	REVISED -	
PLOT DATE = 4/25/2024	DATE - 9-10-24	REVISED -	

STATE OF ILLINOIS
DEPARTMENT OF TRANSPORTATION

STAGE 4 - CABLE DIAGRAM
GREEN MOUNT ROAD AND I-64 EASTBOUND RAMPS

SCALE: 1"=20' | SHEET 29 OF 33 SHEETS | STA. TO STA.

F.A.I. RTE.	SECTION	COUNTY	TOTAL SHEETS	SHEET NO.
64	82-7WRS-2	ST. CLAIR	691	415
		CONTRACT NO. 76K74		
	ILLINOIS	FED. AID PROJECT		

TRAFFIC SIGNAL FACES

CONTROLLER PHASING								
PHASE	1	2	3	4	5	6	7	8
MOVEMENT	SBLT	NB		EB		SB		
CONCURRENT MOVEMENT PERMITTED	6	6	NOT USED	NONE	NOT USED	2	NOT USED	NOT USED

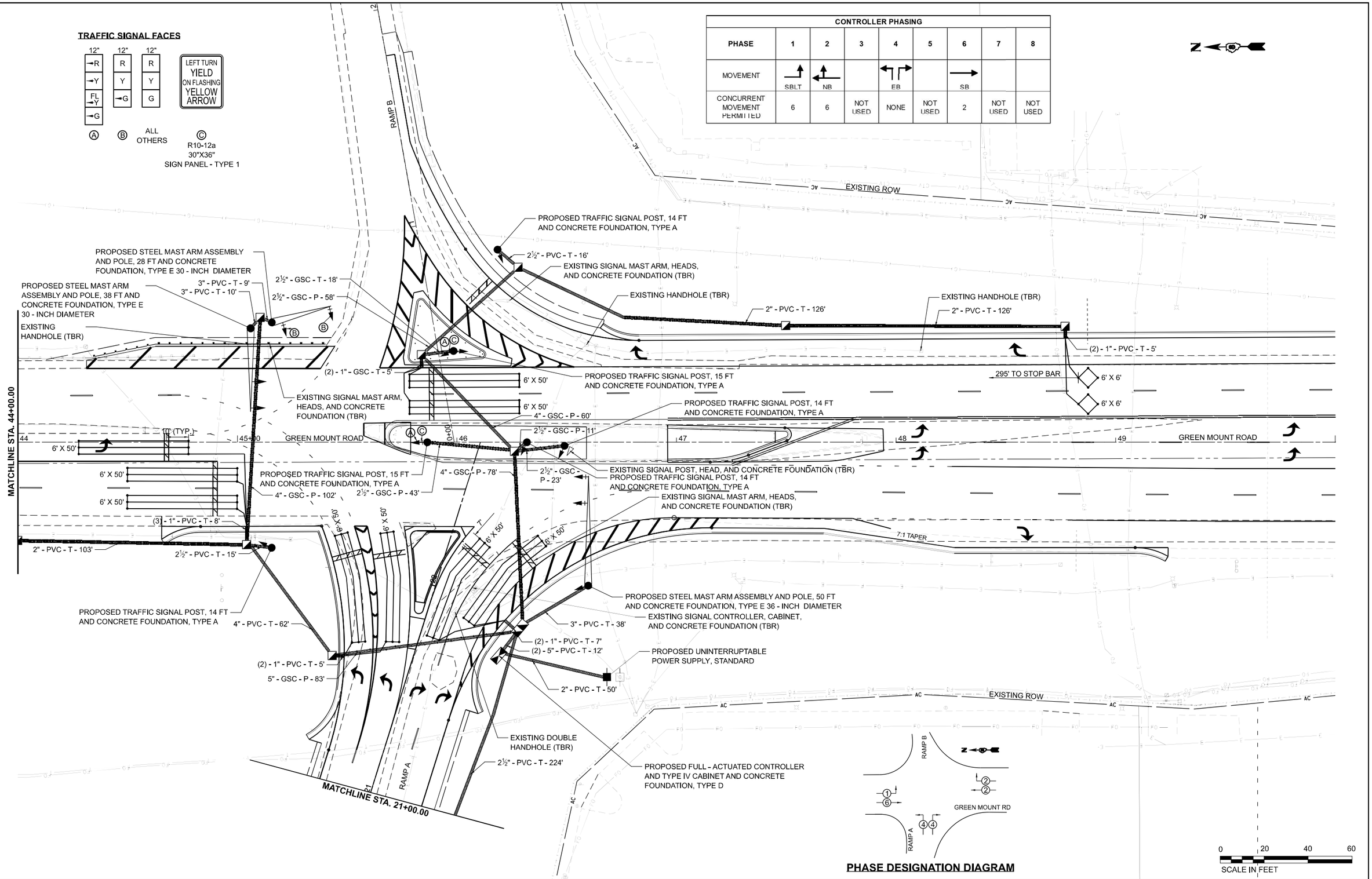

PHASE DESIGNATION DIAGRAM

MODEL: $MODELNAME$
FILE NAME: pw://projectwise.volkert.com:volkert-pw/Documents/Projects/1165901 - PTB 189-056 - I-64 Widening and Reconstruction/CADD/CAD Sheets D876K74-sht-TS.dgn

VOLKERT

USER NAME =	DESIGNED - JLS	REVISED -	
	DRAWN - MAC	REVISED -	
PLOT SCALE = 0.16666633 ' / in.	CHECKED - BRM	REVISED -	
PLOT DATE = 5/3/2024	DATE - 9-10-24	REVISED -	

STATE OF ILLINOIS
DEPARTMENT OF TRANSPORTATION

TRAFFIC SIGNAL PLANS
GREEN MOUNT ROAD AND I-64 EASTBOUND RAMPS

SCALE: 1"=20' | SHEET 30 OF 33 SHEETS | STA. | TO STA.

F.A.I. RTE.	SECTION	COUNTY	TOTAL SHEETS	SHEET NO.
64	82-7WRS-2	ST. CLAIR	691	416
		CONTRACT NO. 76K74		
		ILLINOIS	FED. AID PROJECT	

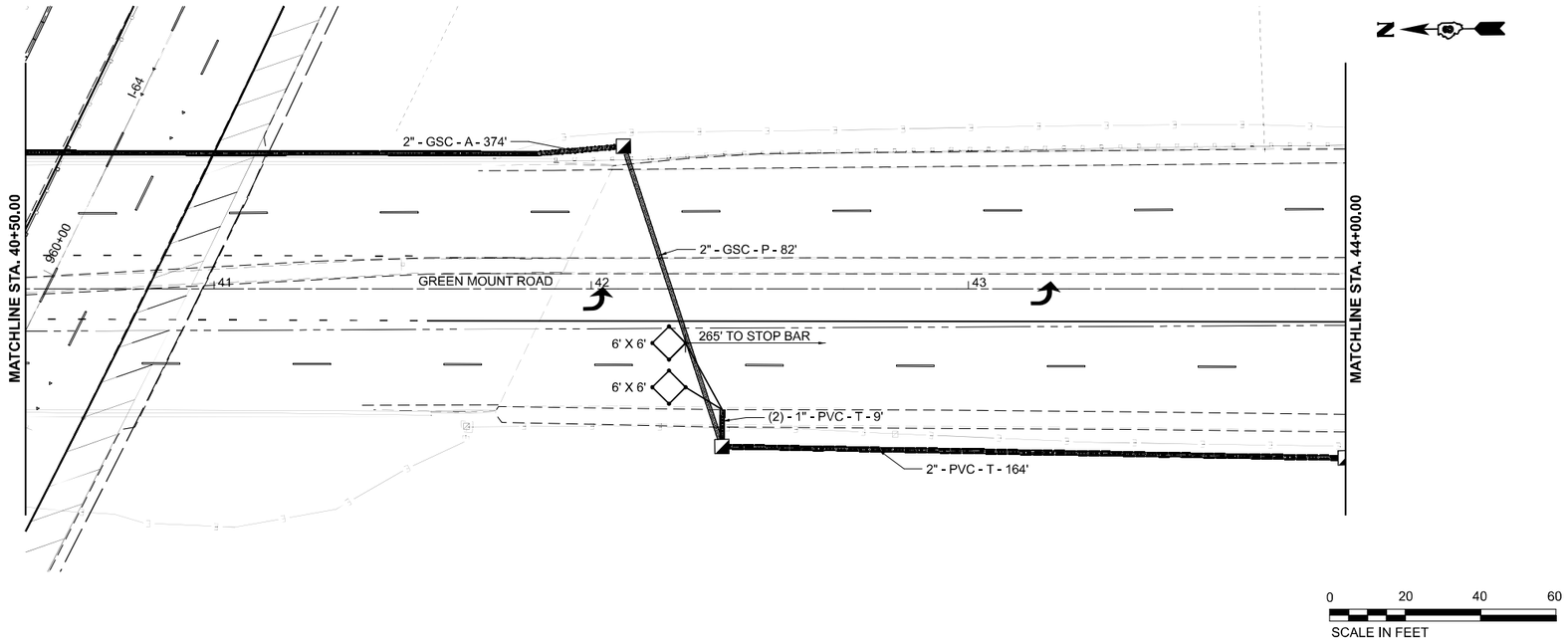

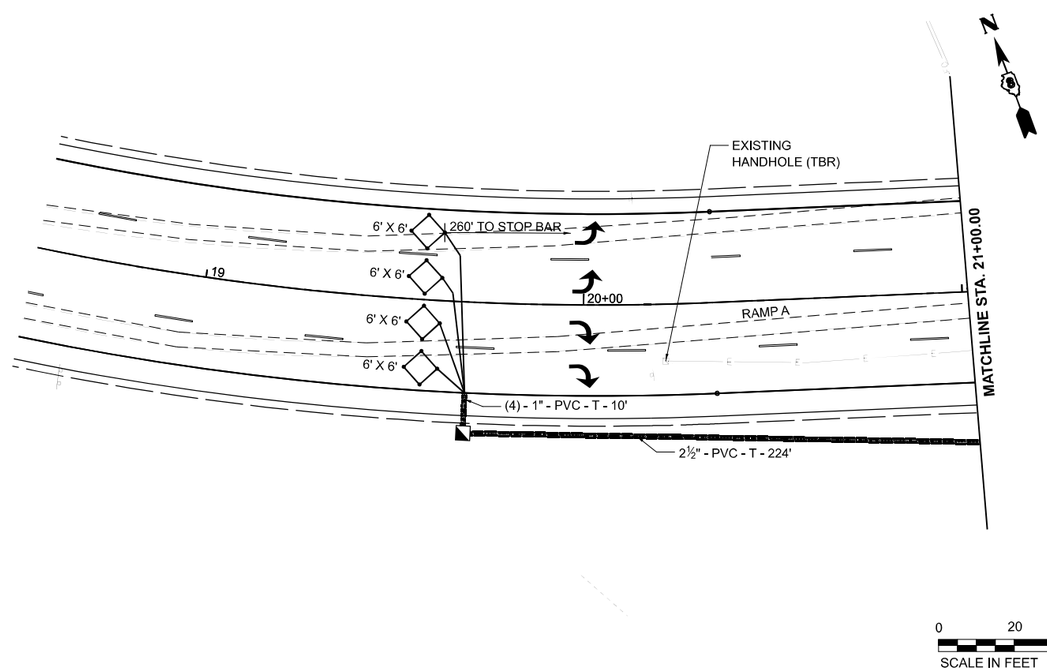

MODEL: $MODELNAME$
FILE NAME: pw://projectwise.volkert.com:volkert-eastwest/Documents/Projects/1169901 - PTB 195-059 - I-64 Widening and Reconstruction/CADD/CAD Sheets/D876K74-sht-TS.dgn

VOLKERT

USER NAME =	DESIGNED - JLS	REVISED -	
	DRAWN - MAC	REVISED -	
PLOT SCALE = 0.16666633 ' / in.	CHECKED - BRM	REVISED -	
PLOT DATE = 4/25/2024	DATE - 9-10-24	REVISED -	

STATE OF ILLINOIS
DEPARTMENT OF TRANSPORTATION

TRAFFIC SIGNAL PLANS
GREEN MOUNT ROAD AND I-64 EASTBOUND RAMPS

SCALE: 1"=20' | SHEET 31 OF 33 SHEETS | STA. | TO STA.

F.A.I. RTE.	SECTION	COUNTY	TOTAL SHEETS	SHEET NO.
64	82-7WRS-2	ST. CLAIR	691	417
		CONTRACT NO. 76K74		
	ILLINOIS	FED. AID PROJECT		

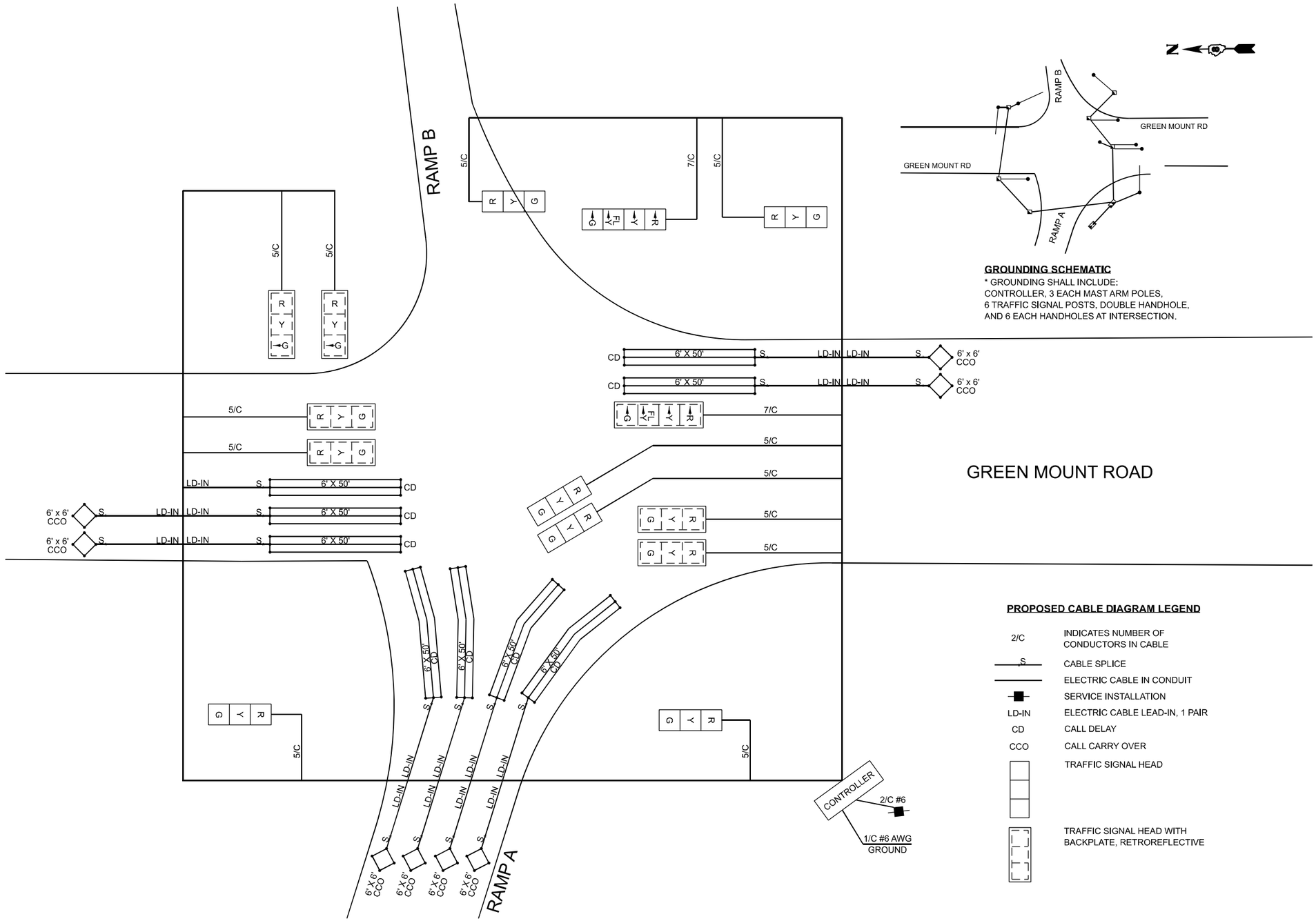

GROUNDING SCHEMATIC

* GROUNDING SHALL INCLUDE:
CONTROLLER, 3 EACH MAST ARM POLES,
6 TRAFFIC SIGNAL POSTS, DOUBLE HANDHOLE,
AND 6 EACH HANDHOLES AT INTERSECTION.

PROPOSED CABLE DIAGRAM LEGEND

2/C	INDICATES NUMBER OF CONDUCTORS IN CABLE
S	CABLE SPLICE
	ELECTRIC CABLE IN CONDUIT
	SERVICE INSTALLATION
LD-IN	ELECTRIC CABLE LEAD-IN, 1 PAIR
CD	CALL DELAY
CCO	CALL CARRY OVER
	TRAFFIC SIGNAL HEAD
	TRAFFIC SIGNAL HEAD WITH BACKPLATE, RETROREFLECTIVE

MODEL: Sheet • TS32 GMR Int 2 • IVD Perm
FILE NAME: c:\volkert_gw_working\maggie.cox\d0282022\D76K74-sht-TS.dgn

VOLKERT

USER NAME = maggie.cox	DESIGNED - JLS	REVISED -	
	DRAWN - MAC	REVISED -	
PLOT SCALE = 0.16666633 ' / in.	CHECKED - BRM	REVISED -	
PLOT DATE = 4/25/2024	DATE - 9-10-24	REVISED -	

STATE OF ILLINOIS
DEPARTMENT OF TRANSPORTATION

CABLE DIAGRAM
GREEN MOUNT ROAD AND I-64 EASTBOUND RAMPS

SCALE: 1"=20' | SHEET 32 OF 33 SHEETS | STA. | TO STA.

F.A.I. RTE.	SECTION	COUNTY	TOTAL SHEETS	SHEET NO.
64	82-7WRS-2	ST. CLAIR	691	418
		CONTRACT NO. 76K74		
	ILLINOIS	FED. AID PROJECT		

ITEM	UNIT	TOTAL QUANTITY
SIGN PANEL - TYPE 1	SQ FT	16
SERVICE INSTALLATION, TYPE A	EACH	1
UNDERGROUND CONDUIT, GALVANIZED STEEL, 1" DIA.	FOOT	10
UNDERGROUND CONDUIT, GALVANIZED STEEL, 2" DIA.	FOOT	82
UNDERGROUND CONDUIT, GALVANIZED STEEL, 2 1/2" DIA.	FOOT	153
UNDERGROUND CONDUIT, GALVANIZED STEEL, 4" DIA.	FOOT	240
UNDERGROUND CONDUIT, GALVANIZED STEEL, 5" DIA.	FOOT	83
UNDERGROUND CONDUIT, PVC, 1" DIA.	FOOT	116
UNDERGROUND CONDUIT, PVC, 2" DIA.	FOOT	509
UNDERGROUND CONDUIT, PVC, 2 1/2" DIA.	FOOT	255
UNDERGROUND CONDUIT, PVC, 3" DIA.	FOOT	57
UNDERGROUND CONDUIT, PVC, 4" DIA.	FOOT	62
UNDERGROUND CONDUIT, PVC, 5" DIA.	FOOT	24
HANDHOLE	EACH	12
DOUBLE HANDHOLE	EACH	1
MAINTENANCE OF EXISTING TRAFFIC SIGNAL INSTALLATION	EACH	1
FULL-ACTUATED CONTROLLER AND TYPE IV CABINET	EACH	1
UNINTERRUPTABLE POWER SUPPLY, STANDARD	EACH	1
ELECTRIC CABLE IN CONDUIT, SIGNAL NO. 14 5C	FOOT	2770
ELECTRIC CABLE IN CONDUIT, SIGNAL NO. 14 7C	FOOT	385
ELECTRIC CABLE IN CONDUIT, LEAD-IN, NO. 14 1 PAIR	FOOT	4285
ELECTRIC CABLE IN CONDUIT, SERVICE, NO. 6 2C	FOOT	69
ELECTRIC CABLE IN CONDUIT, EQUIPMENT GROUNDING CONDUCTOR, NO 6 1C	FOOT	707
TRAFFIC SIGNAL POST, ALUMINUM 14 FT.	EACH	4
TRAFFIC SIGNAL POST, ALUMINUM 15 FT.	EACH	2
STEEL MAST ARM ASSEMBLY AND POLE, 28 FT.	EACH	1
STEEL MAST ARM ASSEMBLY AND POLE, 38 FT.	EACH	1
STEEL MAST ARM ASSEMBLY AND POLE, 50 FT.	EACH	1
CONCRETE FOUNDATION, TYPE A	FOOT	18
CONCRETE FOUNDATION, TYPE D	FOOT	3
CONCRETE FOUNDATION, TYPE E 30-INCH DIAMETER	FOOT	24
CONCRETE FOUNDATION, TYPE E 36-INCH DIAMETER	FOOT	15
SIGNAL HEAD, POLYCARBONATE, LED, 1-FACE, 3-SECTION, BRACKET MOUNTED	EACH	5
SIGNAL HEAD, POLYCARBONATE, LED, 1-FACE, 3-SECTION, MAST ARM MOUNTED	EACH	6
SIGNAL HEAD, POLYCARBONATE, LED, 1-FACE, 4-SECTION, MAST ARM MOUNTED	EACH	2
SIGNAL HEAD, POLYCARBONATE, LED, 2-FACE, 1-3 SECTION, 1-4 SECTION, BRACKET MOUNTED	EACH	1
TRAFFIC SIGNAL BACKPLATE, RETROREFLECTIVE	EACH	7
INDUCTIVE LOOP DETECTOR	EACH	17
DETECTOR LOOP, TYPE I	FOOT	2167
TEMPORARY TRAFFIC SIGNAL INSTALLATION	EACH	1
REMOVE ELECTRIC CABLE FROM CONDUIT	FOOT	5229
REMOVE EXISTING TRAFFIC SIGNAL EQUIPMENT	EACH	4
REMOVE EXISTING HANDHOLE	EACH	10
REMOVE EXISTING CONCRETE FOUNDATION	EACH	5
GPS CLOCK SYNC UNIT	EACH	1
VIDEO VEHICLE DETECTION SYSTEM - TEMPORARY	EACH	1
REMOVE EXISTING TRAFFIC CONTROLLER AND CABINET	EACH	1
REMOVE EXISTING SIGNAL HEAD	EACH	13

GENERAL NOTES

1. DESIGN OF THE NOISE ABATEMENT WALLS SHALL MEET THE REQUIREMENTS OF THE CURRENT EDITION OF THE ILLINOIS DEPARTMENT OF TRANSPORTATION BUREAU OF BRIDGES AND STRUCTURES BRIDGE MANUAL, THE STANDARD SPECIFICATIONS FOR ROAD AND BRIDGE CONSTRUCTION, AND SPECIAL PROVISIONS.
2. THE CONTRACTOR SHALL REVIEW THE MAINTENANCE OF TRAFFIC PLANS. THE CONSTRUCTION OF THE NOISE ABATEMENT WALLS MAY NEED TO BE SEQUENCED TO MATCH THE ROADWAY SEQUENCE OF CONSTRUCTION, AND THE CONTRACTOR MAY NOT BE ABLE TO CONSTRUCT THE NOISE ABATEMENT WALLS IN ONE CONTINUOUS OPERATION. ADDITIONAL MOBILIZATION/ DEMOBILIZATION REQUIRED WILL NOT BE MEASURED FOR PAYMENT, BUT SHALL BE INCLUDED IN THE COST OF NOISE ABATEMENT WALL, GROUND MOUNTED.
3. SEE UTILITIES AND DRAINAGE SHEETS FOR INFORMATION RELATED TO EXISTING AND PROPOSED FACILITIES ALONG THE PROPOSED NOISE ABATEMENT WALLS.
4. THE CONTRACTOR SHALL VERIFY LOCATION OF ALL EXISTING UTILITIES AND STRUCTURES AND SHALL TAKE ALL NECESSARY PRECAUTIONS TO PERFORM THE WORK IN SUCH A MANNER AS TO NOT DAMAGE EXISTING UTILITIES OR STRUCTURES, LOCATED NEAR OR BENEATH THE NOISE ABATEMENT WALLS. ANY DAMAGE TO EXISITNG UTILITIES OR STRUCTURES SHALL BE REPAIRED AT NO COST TO THE DEPARTMENT.
5. THE PROPOSED NOISE ABATEMENT WALL, GROUND MOUNTED FOUNDATIONS ARE TO BE DETERMINED BY THE CONTRACTOR AND SHALL BE DESIGNED TO AVOID CONFLICTS WITH THE EXISTING AND PROPOSED UTILITIES, EXISTING AND PROPOSED DRAINAGE CULVERTS, AND STRUCTURES.
6. THE CONTRACTOR SHALL VERIFY ACCESS DOOR LOCATIONS AND DIMENSIONS PRIOR TO MANUFACTURING OR INSTALLATION OF NOISE ABATEMENT WALLS.
7. IT SHALL BE THE CONTRACTOR'S RESPONSIBILITY TO FIELD VERIFY EXISTING AND PROPOSED GROUND ELEVATIONS AT THE LOCATIONS OF THE PROPOSED GROUND MOUNTED NOISE ABATEMENT WALLS AND COMPARE TO THAT SHOWN ON THE PLANS. ADJUSTMENTS TO NOISE ABATEMENT WALL HEIGHTS AS REQUIRED TO ACCOMMODATE ACTUAL FIELD CONDITIONS SHALL BE MADE BY THE CONTRACTOR AT NO ADDITIONAL COST. COST TO COMPLY WITH THIS REQUIREMENT IS INCLULDED IN THE COST OF NOISE ABATEMENT WALL, GROUND MOUNTED.
8. THE CONTRACTOR SHALL PROVIDE 4" WEEP HOLES AT GROUND LEVEL IN THE BOTTOM OF THE WALL AT A SPACING OF 8 FEET, WHEN GROUND SURFACE SLOPES INDICATE THAT PONDING AT THE WALL FACE IS A CONCERN.

NOISE REDUCTION DATA

NOISE WALL STRUCTURE NUMBER	FACE	FROM MAINLINE STA.	TO MAINLINE STA.	NOISE REDUCTION COEFFICIENT	COMMENTS
082-N6451	INTERSTATE FACE	14+00.00 *	816+20.00	REFLECTIVE	* WALL BEGINS WITH
(WALL 2)	RESIDENTIAL FACE	14+00.00 *	816+20.00	ABSORPTIVE - 0.65	RAMP C STATIONING
082-N6454	INTERSTATE FACE	818+05.00	833+40.22	REFLECTIVE	
(WALL 3)	HOSPITAL FACE	818+05.00	833+40.22	ABSORPTIVE - 0.65	
082-N6455	INTERSTATE FACE	832+70.00	841+05.00	REFLECTIVE	
(WALL 4)	HOSPITAL FACE	832+70.00	841+05.00	ABSORPTIVE - 0.65	
082-N6456	INTERSTATE FACE	842+00.00	865+40.00	REFLECTIVE	
(WALL 5)	RESIDENTIAL FACE	842+00.00	865+40.00	ABSORPTIVE - 0.65	
082-N6458	INTERSTATE FACE	865+15.00	879+80.00	REFLECTIVE	
(WALL 7)	RESIDENTIAL FACE	865+15.00	879+80.00	ABSORPTIVE - 0.65	
082-N6459	INTERSTATE FACE	879+00.00	883+60.00	REFLECTIVE	
(WALL 8)	RESIDENTIAL FACE	879+00.00	883+60.00	ABSORPTIVE - 0.65	

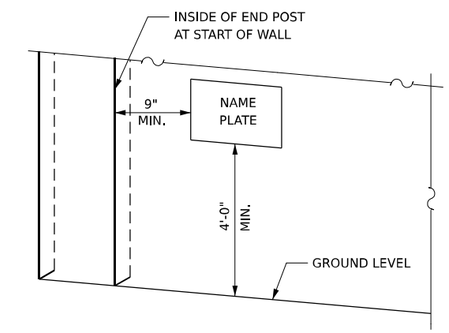

LOCATION OF NAME PLATE

TOTAL BILL OF MATERIAL

ITEM	UNIT	WALL NO. 2	WALL NO. 3	WALL NO. 4	WALL NO. 5	WALL NO. 7	WALL NO. 8	TOTAL
NOISE ABATEMENT WALL, GROUND MOUNTED	SQ FT	81,604	31,441	17,440	40,298	25,416	5,756	201,955
NAME PLATES	EACH	1	1	1	1	1	1	6

DESIGN SPECIFICATIONS

AASHTO LRFD BRIDGE DESIGN
SPECIFICATIONS, 2020 EDITION

DESIGN STRESSES

FIELD UNITS

f'c = 4,000 PSI
fy = 60,000 PSI (REINFORCEMENT)
fy = 50,000 PSI (STRUCT. STEEL, M270 GRADE 50, POSTS)
fy = 36,000 PSI (STRUCT. STEEL, M270 GRADE 36, ALL OTHER STRUCTURAL STEEL)

PRECAST UNITS

f'c = 4,500 PSI
fy = 60,000 PSI (REINFORCEMENT)
fy = 65,000 PSI (WELDED WIRE REINFORCEMENT)

DESIGN STRESSES

STRENGTH III OR V WIND: 35 PSF
SERVICE I WIND: 15 PSF

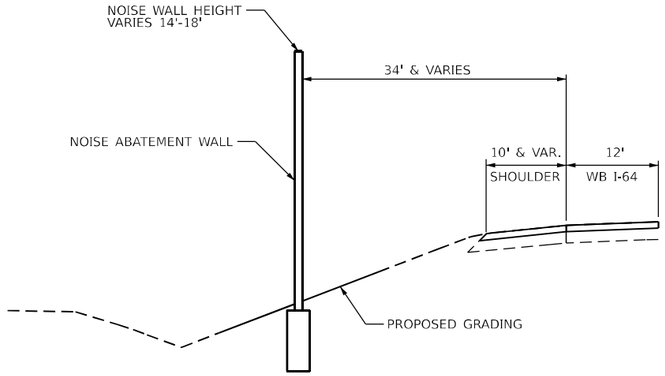

SECTION B: NOISE WALLS 2 & 7 (I-64)

N.T.S.

WALL 2 STA. 772+42.19 TO STA. 806+00.00
WALL 7 STA. 865+15.00 TO STA. 866+50.00
WALL 7 STA. 869+00.00 TO STA. 879+80.00

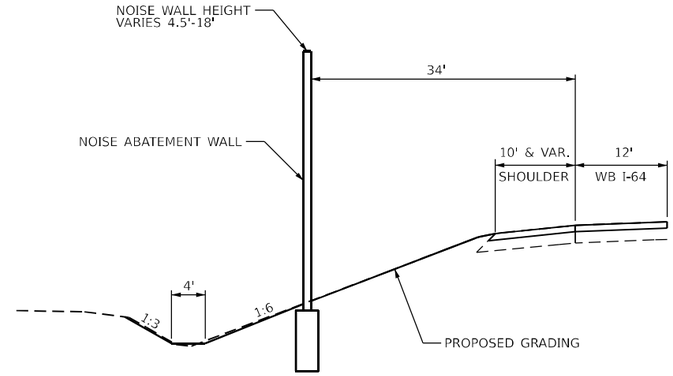

SECTION C: NOISE WALL 2 (I-64)

N.T.S.

WALL 2 STA. 806+00.00 TO STA. 816+20.00

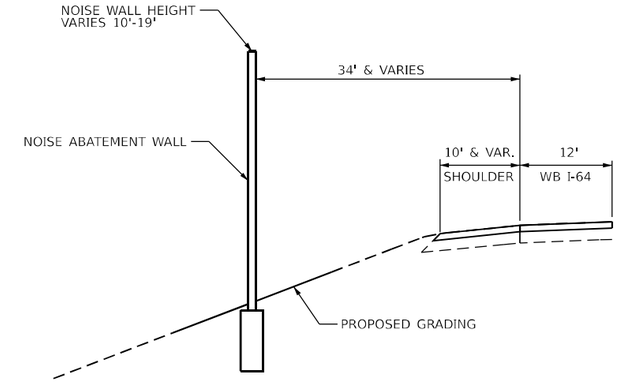

SECTION D: NOISE WALLS 5 & 7 (I-64)

N.T.S.

WALL 5 STA. 842+00.00 TO STA. 845+50.00
WALL 5 STA. 858+10.00 TO STA. 863+50.00
WALL 7 STA. 866+50.00 TO STA. 869+00.00

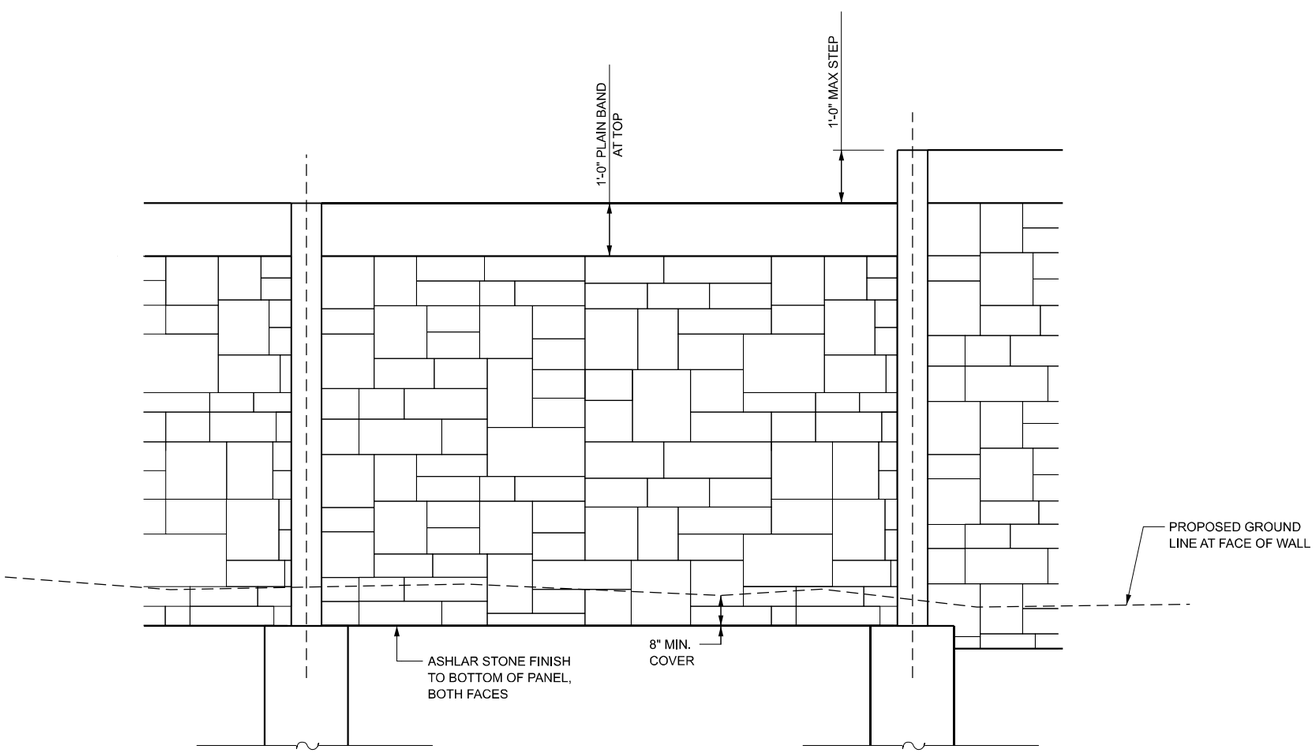

ELEVATION

N.T.S.

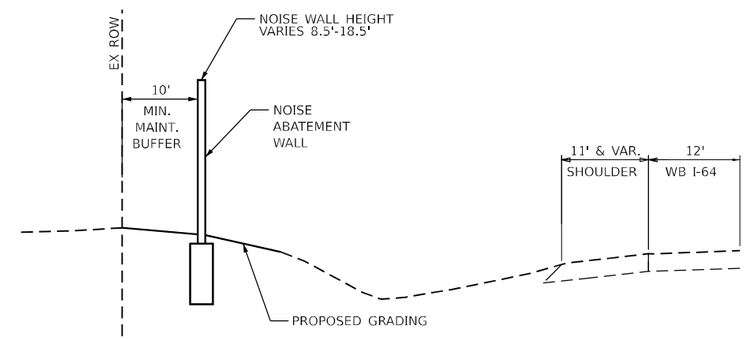

SECTION E: NOISE WALLS 5 & 8 (I-64)

N.T.S.

WALL 5 STA. 845+50.00 TO STA. 858+10.00
WALL 5 STA. 863+50.00 TO STA. 865+40.00
WALL 8 STA. 879+00.00 TO STA. 883+60.00

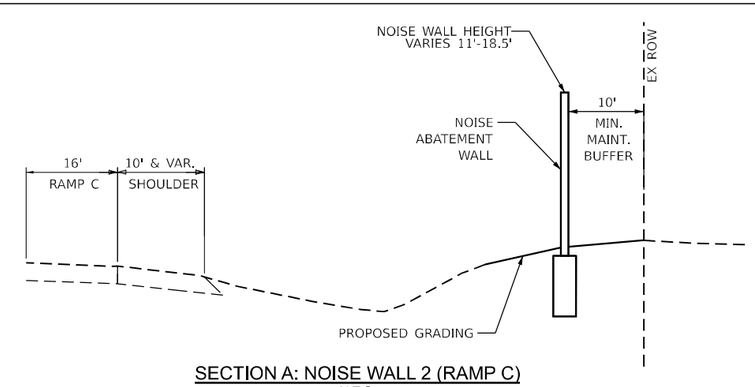

SECTION A: NOISE WALL 2 (RAMP C)

N.T.S.

WALL 2 STA. 8+10.46 TO STA. 14+00.00

MODEL: $MODELNAME$
FILE NAME: pw://projectwise.volkert.com:volkert-ks-pw/Documents/Projects/1169901 • PTB 195-056 - I-64 Widening and Reconstruction/CADD/CAD Sheets/D876K74-SH-Noise Walls-Details.dgn

VOLKERT

USER NAME =	DESIGNED - SJN	REVISED -	
	DRAWN - MAM	REVISED -	
PLOT SCALE = 0.16666633 ' / in.	CHECKED - JLS	REVISED -	
PLOT DATE = 5/2/2024	DATE - 9-10-24	REVISED -	

STATE OF ILLINOIS
DEPARTMENT OF TRANSPORTATION

NOISE WALL GENERAL NOTES & DETAILS
I-64 WIDENING AND RECONSTRUCTION

SCALE: N/A | SHEET 2 OF 38 SHEETS | STA. N/A | TO STA. N/A

F.A.I. RTE.	SECTION	COUNTY	TOTAL SHEETS	SHEET NO.
64	82-7HB-1	ST. CLAIR	691	421
		CONTRACT NO. 76K74		
	ILLINOIS	FED. AID PROJECT		

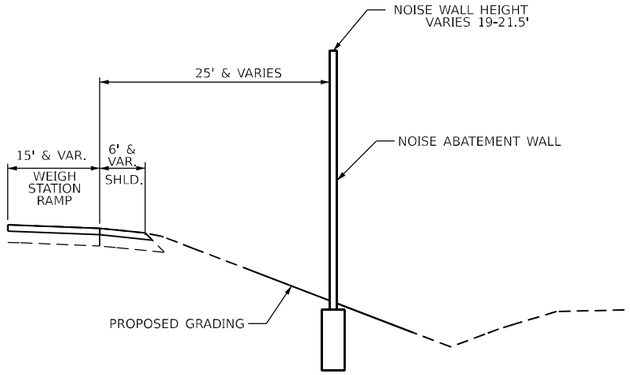

SECTION F: NOISE WALL 4 (I-64)
N.T.S.
WALL 4 STA. 832+70.00 TO STA. 841+05.00

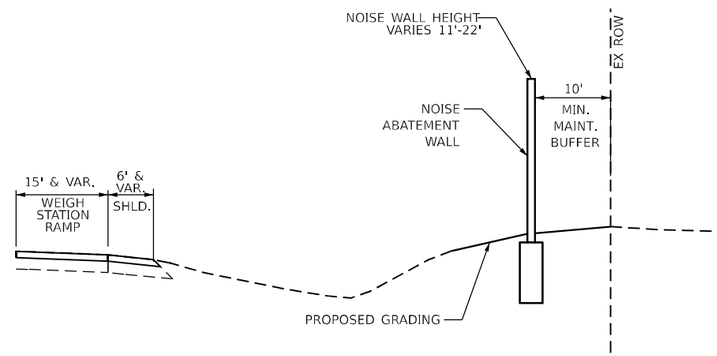

SECTION G: NOISE WALL 3 (I-64)
N.T.S.
WALL 4 STA. 818+05.00 TO STA. 833+40.22

MODEL: $MODELNAME$
FILE NAME: pw://projectwise.volkert.com:volkertwise/Documents/Projects/1169901 - PTB 195-056 - I-64 Widening and Reconstruction\CADD\CAD Sheets\D876K74-SH-Noise Walls-Details.dgn

VOLKERT

USER NAME =	DESIGNED - SJN	REVISED -	
	DRAWN - MAM	REVISED -	
PLOT SCALE = 0.16666633 ' / in.	CHECKED - JLS	REVISED -	
PLOT DATE = 5/2/2024	DATE - 9-10-24	REVISED -	

STATE OF ILLINOIS
DEPARTMENT OF TRANSPORTATION

NOISE WALL GENERAL NOTES & DETAILS
I-64 WIDENING AND RECONSTRUCTION

SCALE: N/A | SHEET 3 OF 38 SHEETS | STA. N/A TO STA. N/A

F.A.I. RTE.	SECTION	COUNTY	TOTAL SHEETS	SHEET NO.
64	82-7HB-1	ST. CLAIR	691	422
		CONTRACT NO. 76K74		
	ILLINOIS	FED. AID PROJECT		

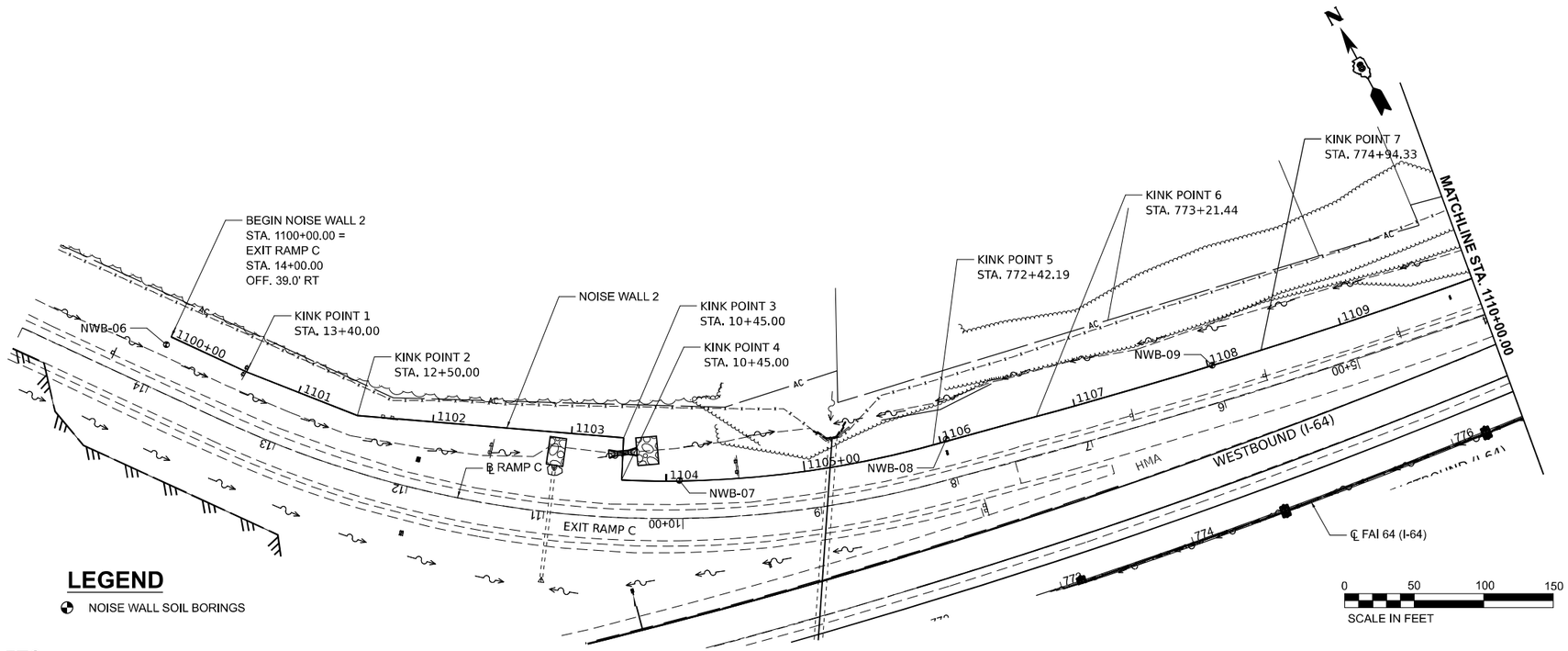

TABLE OF POINT LOCATIONS

POINT	RAMP C/I-64 STA.	RAMP C/I-64 OFF.	NORTHING	EASTING
BEGIN	14+00.00	39.0' RT	137020.79	102427.03
KINK PT. 1	13+40.00	39.0' RT	136972.61	102462.80
KINK PT. 2	12+50.00	39.0' RT	136907.26	102517.63
KINK PT. 3	10+45.00	57.5' RT	136801.69	102678.21
KINK PT. 4	10+45.00	27.0' RT	136775.52	102662.47
KINK PT. 5	772+42.19	126.8' LT	136690.71	102871.13
KINK PT. 6	773+21.44	123.3' LT	136673.07	102946.25
KINK PT. 7	774+94.33	114.2' LT	136637.61	103111.13
KINK PT. 8	783+11.63	91.0' LT	136574.82	103907.28
END	816+20.00	91.0' LT	136692.66	107213.55

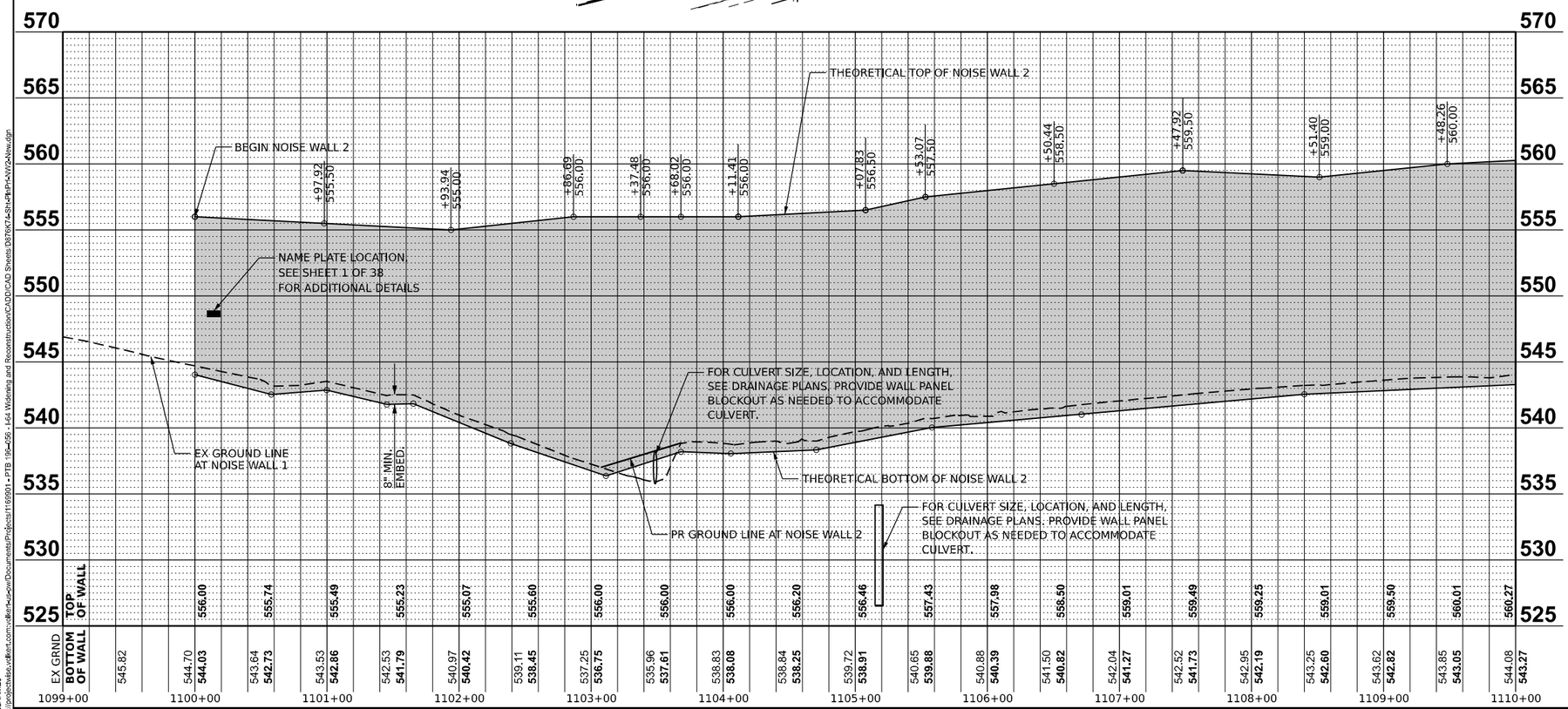

NOISE ABATEMENT WALL
BUILT (YEAR) BY
STATE OF ILLINOIS
FAI 64
SECTION 82-7WRS-2
FROM STA. (14+00) TO STA. (816+20)
STRUCTURE NO. 082-N6451

NAME PLATE
SEE STD. 515001

GENERAL PLAN & ELEVATION
NOISE ABATEMENT WALL
F.A.I. RTE. 64
SECTION 82-7WRS-2
ST. CLAIR COUNTY
STA. 14+00.00
TO STA 816+20.00

MODEL: $MODELNAME$
FILE NAME: pw://projectwise.volkert.com:volkertwise-pw/Documents/Projects/1169991 • PTB 195-056: I-64 Widening and Reconstruction/CADD/CAD Sheets/D76K74-Sht-PltPrt-NW2-New.dgn

VOLKERT

USER NAME =	DESIGNED - SJN	REVISED -	
	DRAWN - MAM	REVISED -	
PLOT SCALE = 0.16666633 ' / in.	CHECKED - JLS	REVISED -	
PLOT DATE = 5/2/2024	DATE - 9-10-24	REVISED -	

STATE OF ILLINOIS
DEPARTMENT OF TRANSPORTATION

PLAN & ELEVATION - NOISE WALL 2
I-64 WIDENING AND RECONSTRUCTION

SCALE: 1"=50' | SHEET 4 OF 38 SHEETS | STA. 1099+00 TO STA. 1110+00

F.A.I. RTE.	SECTION	COUNTY	TOTAL SHEETS	SHEET NO.
64	82-7HB-1	ST. CLAIR	691	423
		CONTRACT NO. 76K74		
	ILLINOIS	FED. AID PROJECT		

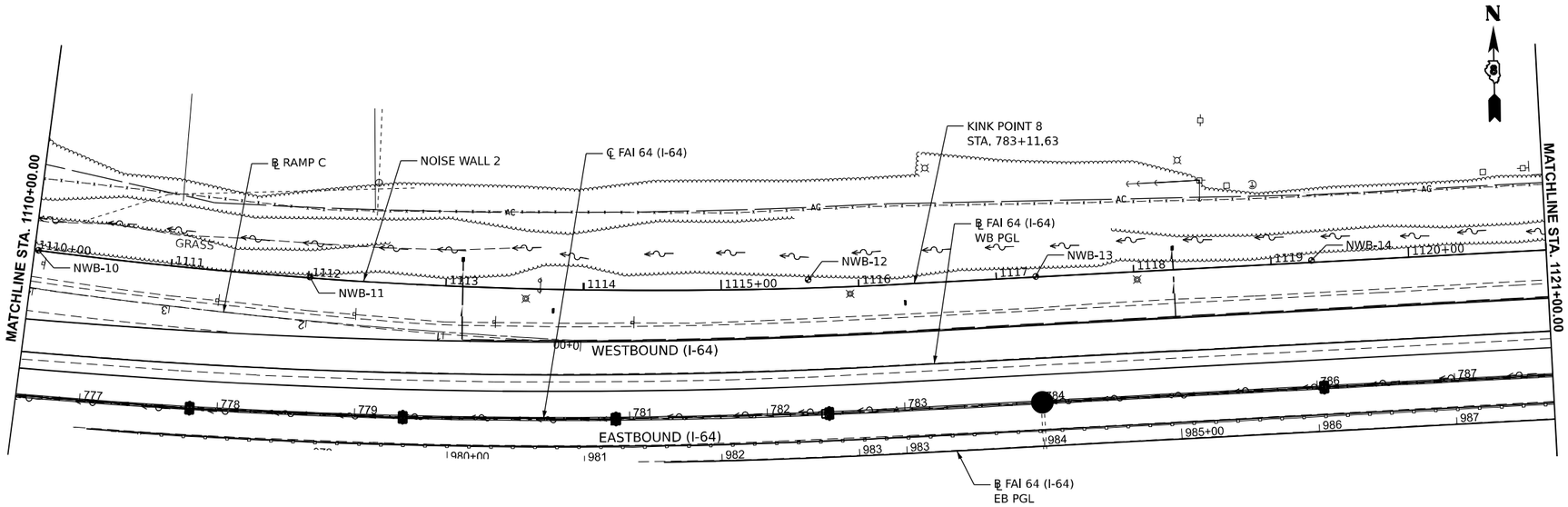

LEGEND

NOISE WALL SOIL BORINGS

0 50 100 150
SCALE IN FEET

TABLE OF POINT LOCATIONS

POINT	RAMP C/I-64 STA.	RAMP C/I-64 OFF.	NORTHING	EASTING
BEGIN	14+00.00	39.0' RT	137020.79	102427.03
KINK PT. 1	13+40.00	39.0' RT	136972.61	102462.80
KINK PT. 2	12+50.00	39.0' RT	136907.26	102517.63
KINK PT. 3	10+45.00	57.5' RT	136801.69	102678.21
KINK PT. 4	10+45.00	27.0' RT	136775.52	102662.47
KINK PT. 5	772+42.19	126.8' LT	136690.71	102871.13
KINK PT. 6	773+21.44	123.3' LT	136673.07	102946.25
KINK PT. 7	774+94.33	114.2' LT	136637.61	103111.13
KINK PT. 8	783+11.63	91.0' LT	136574.82	103907.28
END	816+20.00	91.0' LT	136692.66	107213.55

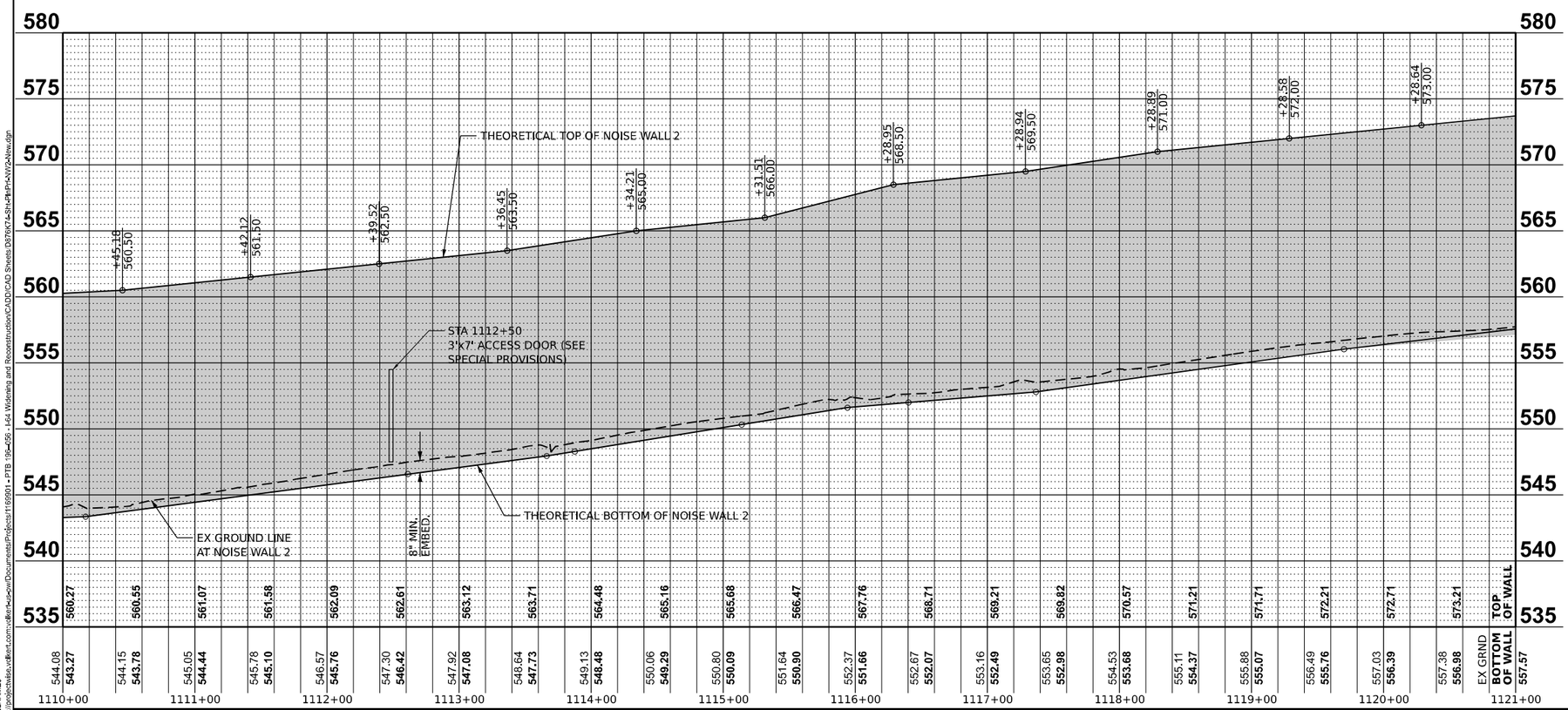

GENERAL PLAN & ELEVATION
NOISE ABATEMENT WALL
F.A.I. RTE. 64
SECTION 82-7WRS-2
ST. CLAIR COUNTY
STA. 14+00.00
TO STA 816+20.00

MODEL: $MODELNAME$
FILE NAME: pw://projectwise.volkert.com:volkertwise-pw/Documents/Projects/116990 • PTB 195-056 - I-64 Widening and Reconstruction/CADD/CAD Sheets/D76K74-Sht-PltPrt-NW2-New.dgn

VOLKERT

USER NAME =	DESIGNED - SJN	REVISED -	
	DRAWN - MAM	REVISED -	
PLOT SCALE = 0.16666633 ' / in.	CHECKED - JLS	REVISED -	
PLOT DATE = 5/2/2024	DATE - 9-10-24	REVISED -	

STATE OF ILLINOIS
DEPARTMENT OF TRANSPORTATION

PLAN & ELEVATION - NOISE WALL 2
I-64 WIDENING AND RECONSTRUCTION

SCALE: 1"=50' | SHEET 5 OF 38 SHEETS | STA. 1110+00 TO STA. 1121+00

F.A.I. RTE.	SECTION	COUNTY	TOTAL SHEETS	SHEET NO.
64	82-7HB-1	ST. CLAIR	691	424

CONTRACT NO. 76K74

ILLINOIS | FED. AID PROJECT

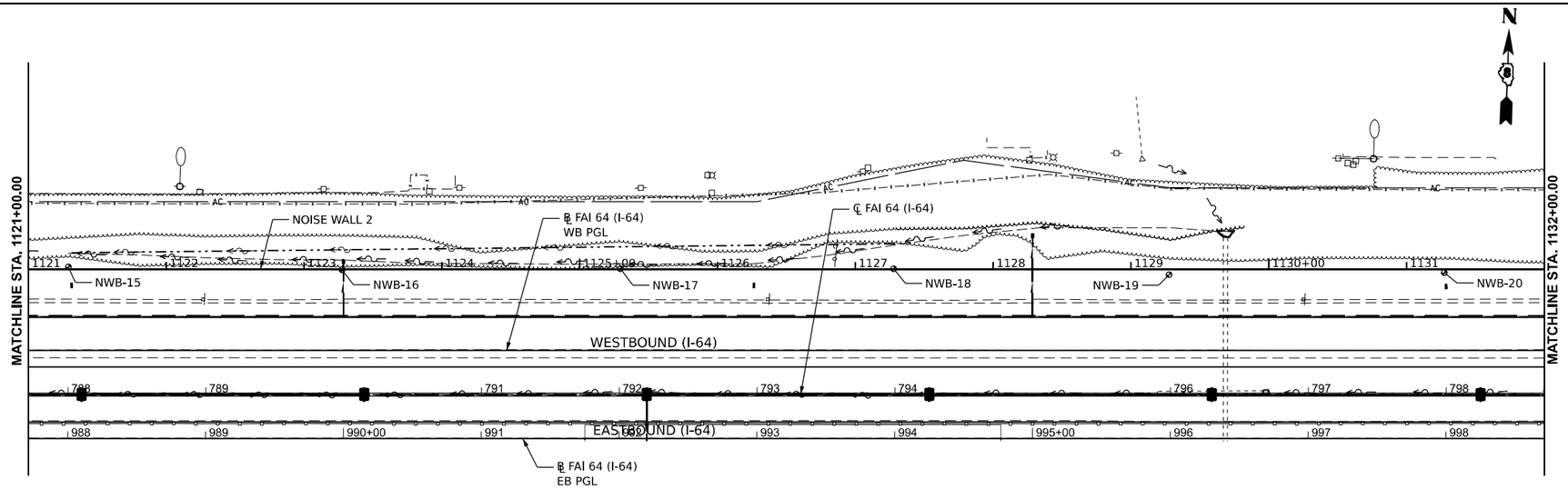

TABLE OF POINT LOCATIONS

POINT	RAMP C/I-64 STA.	RAMP C/I-64 OFF.	NORTHING	EASTING
BEGIN	14+00.00	39.0' RT	137020.79	102427.03
KINK PT. 1	13+40.00	39.0' RT	136972.61	102462.80
KINK PT. 2	12+50.00	39.0' RT	136907.26	102517.63
KINK PT. 3	10+45.00	57.5' RT	136801.69	102678.21
KINK PT. 4	10+45.00	27.0' RT	136775.52	102662.47
KINK PT. 5	772+42.19	126.8' LT	136690.71	102871.13
KINK PT. 6	773+21.44	123.3' LT	136673.07	102946.25
KINK PT. 7	774+94.33	114.2' LT	136637.61	103111.13
KINK PT. 8	783+11.63	91.0' LT	136574.82	103907.28
END	816+20.00	91.0' LT	136692.66	107213.55

LEGEND

NOISE WALL SOIL BORINGS

0 50 100 150
SCALE IN FEET

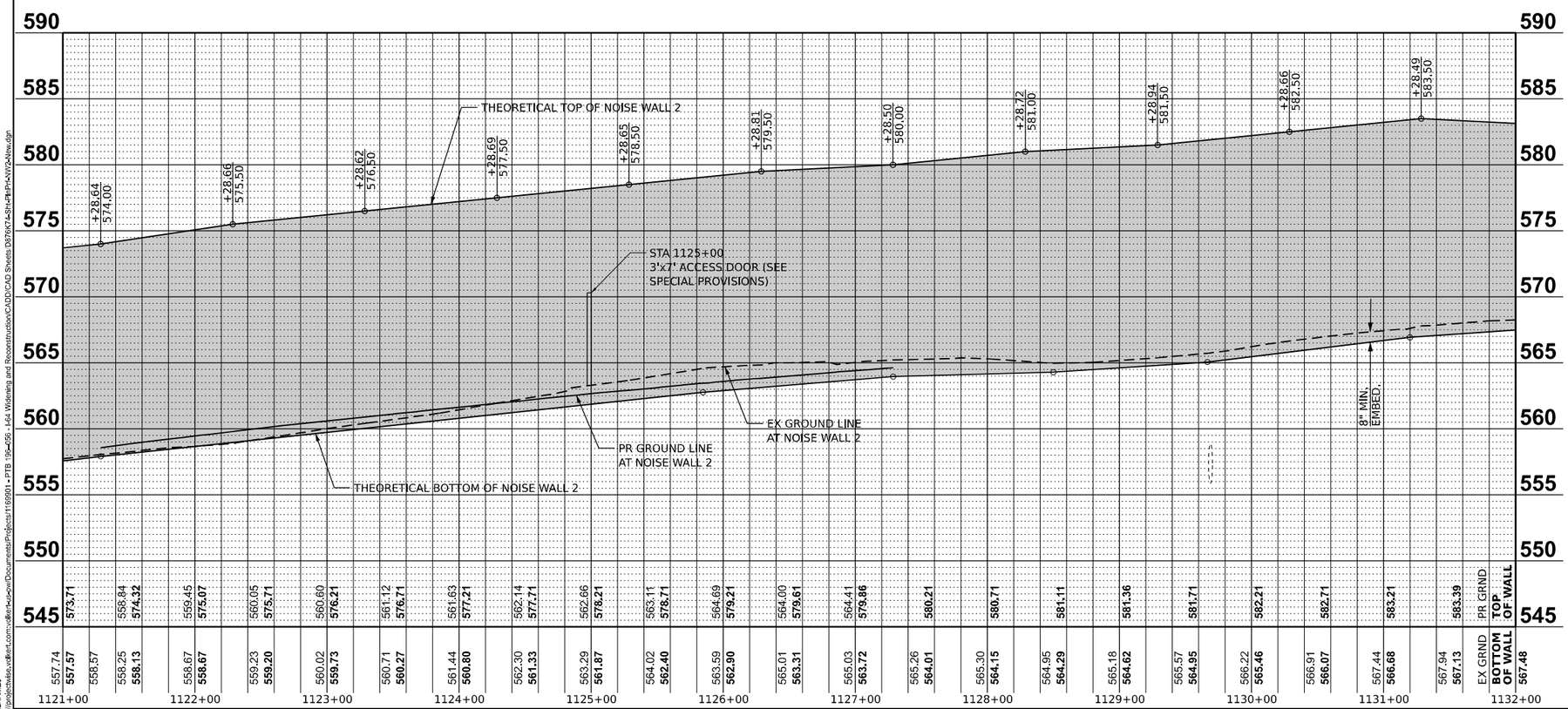

GENERAL PLAN & ELEVATION
NOISE ABATEMENT WALL
F.A.I. RTE. 64
SECTION 82-7WRS-2
ST. CLAIR COUNTY
STA. 14+00.00
TO STA 816+20.00

MODEL: $MODELNAME$
FILE NAME: pw://projectwise.volkert.com:volkert-us-pw/Documents/Projects/116990 • PTB 195-056 - I-64 Widening and Reconstruction/CADD/CAD Sheets/D76K74-Sht-PltPrt-NW2-New.dgn

VOLKERT

USER NAME =	DESIGNED - SJN	REVISED -	
	DRAWN - MAM	REVISED -	
PLOT SCALE = 0.16666633 ' / in.	CHECKED - JLS	REVISED -	
PLOT DATE = 5/2/2024	DATE - 9-10-24	REVISED -	

STATE OF ILLINOIS
DEPARTMENT OF TRANSPORTATION

PLAN & ELEVATION - NOISE WALL 2
I-64 WIDENING AND RECONSTRUCTION

SCALE: 1"=50' | SHEET 6 OF 38 SHEETS | STA. 1121+00 TO STA. 1132+00

F.A.I. RTE.	SECTION	COUNTY	TOTAL SHEETS	SHEET NO.
64	82-7HB-1	ST. CLAIR	691	425

CONTRACT NO. 76K74

ILLINOIS | FED. AID PROJECT

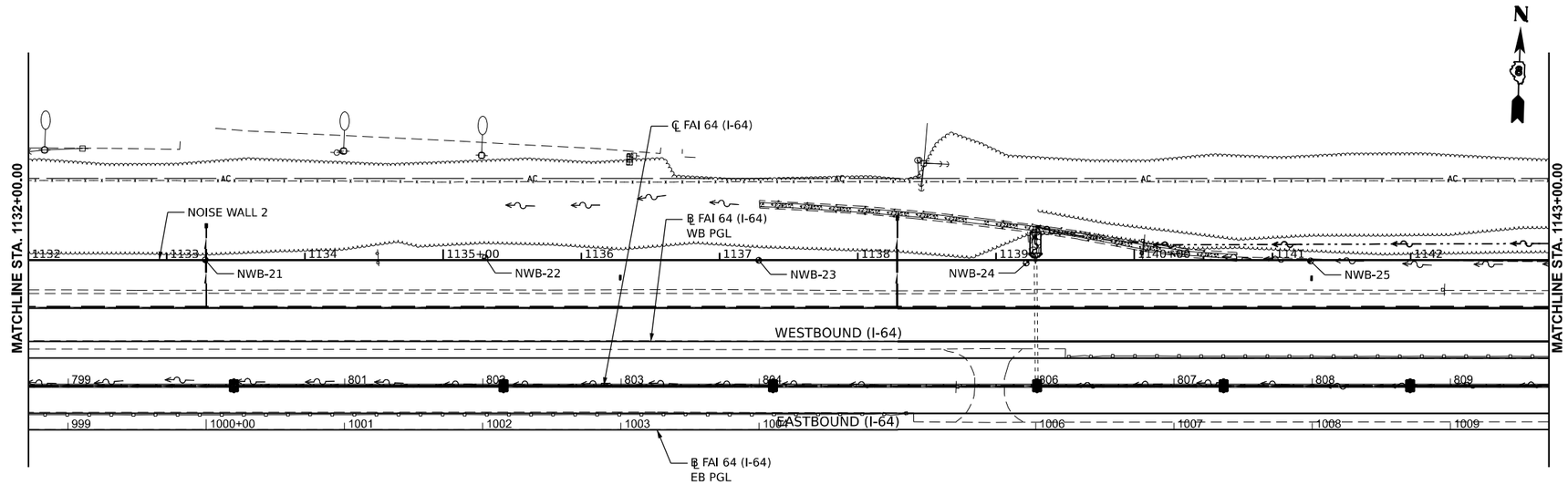

TABLE OF POINT LOCATIONS

POINT	RAMP C/I-64 STA.	RAMP C/I-64 OFF.	NORTHING	EASTING
BEGIN	14+00.00	39.0' RT	137020.79	102427.03
KINK PT. 1	13+40.00	39.0' RT	136972.61	102462.80
KINK PT. 2	12+50.00	39.0' RT	136907.26	102517.63
KINK PT. 3	10+45.00	57.5' RT	136801.69	102678.21
KINK PT. 4	10+45.00	27.0' RT	136775.52	102662.47
KINK PT. 5	772+42.19	126.8' LT	136690.71	102871.13
KINK PT. 6	773+21.44	123.3' LT	136673.07	102946.25
KINK PT. 7	774+94.33	114.2' LT	136637.61	103111.13
KINK PT. 8	783+11.63	91.0' LT	136574.82	103907.28
END	816+20.00	91.0' LT	136692.66	107213.55

LEGEND

NOISE WALL SOIL BORINGS

0 50 100 150
SCALE IN FEET

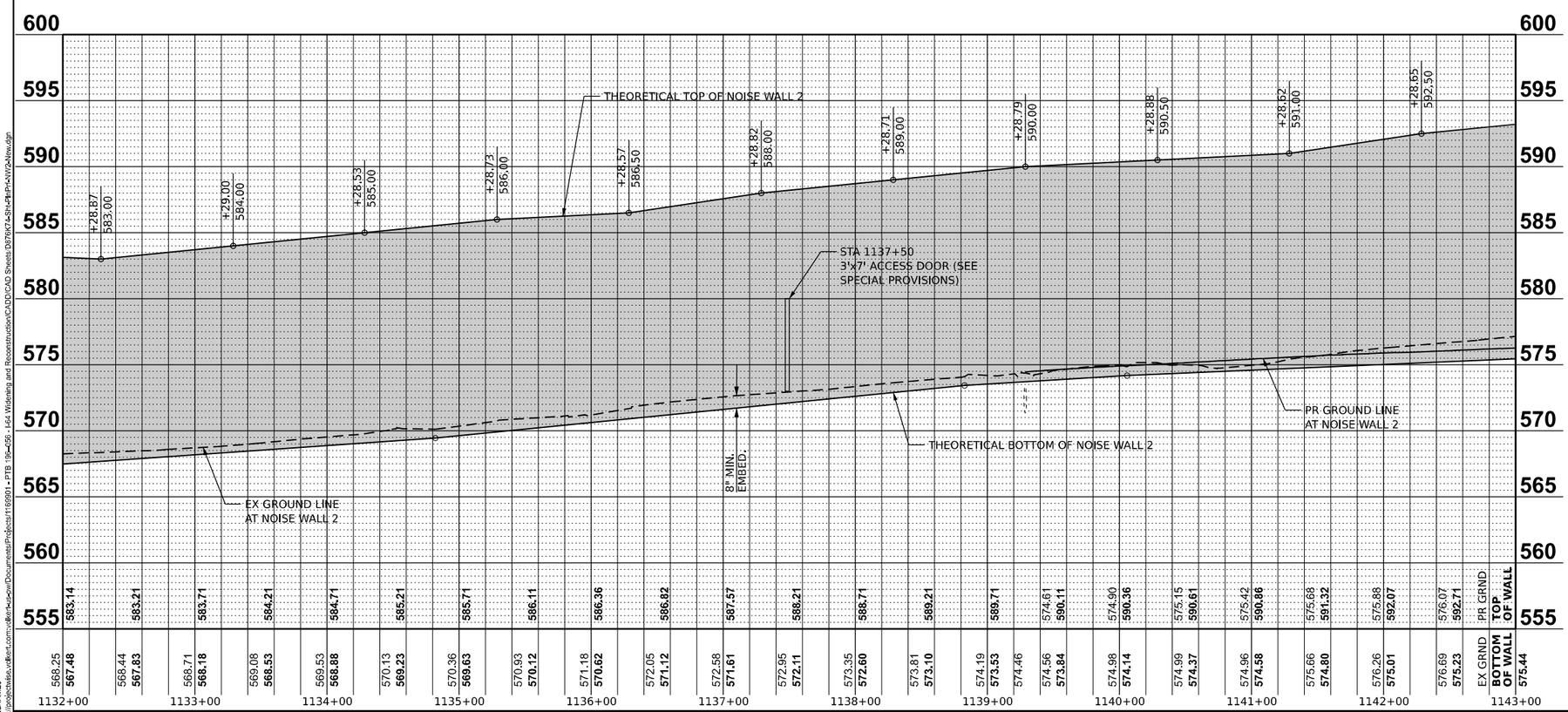

GENERAL PLAN & ELEVATION
NOISE ABATEMENT WALL
F.A.I. RTE. 64
SECTION 82-7WRS-2
ST. CLAIR COUNTY
STA. 14+00.00
TO STA 816+20.00

MODEL: $MODELNAME$
FILE NAME: pw://projectwise.volkert.com:volkertwise-pw/Documents/Projects/1166991 • PTB 195-056 - I-64 Widening and Reconstruction/CADD/CAD Sheets/D76K74-Sht-PltPrt-NW2-New.dgn

VOLKERT

USER NAME =	DESIGNED - SJN	REVISED -	
	DRAWN - MAM	REVISED -	
PLOT SCALE = 0.16666633 ' / in.	CHECKED - JLS	REVISED -	
PLOT DATE = 5/2/2024	DATE - 9-10-24	REVISED -	

STATE OF ILLINOIS
DEPARTMENT OF TRANSPORTATION

PLAN & ELEVATION - NOISE WALL 2
I-64 WIDENING AND RECONSTRUCTION

SCALE: 1"=50' | SHEET 7 OF 38 SHEETS | STA. 1132+00 TO STA. 1143+00

F.A.I. RTE.	SECTION	COUNTY	TOTAL SHEETS	SHEET NO.
64	82-7HB-1	ST. CLAIR	691	426

CONTRACT NO. 76K74

ILLINOIS | FED. AID PROJECT

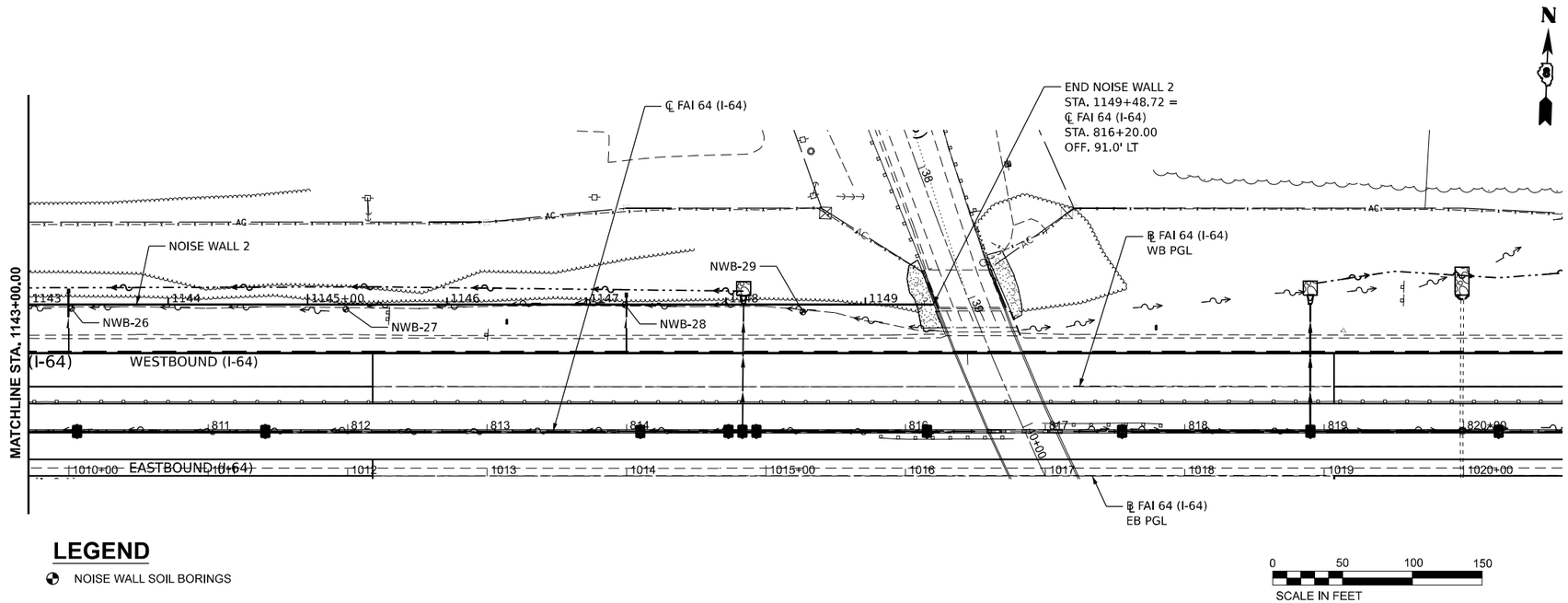

LEGEND

NOISE WALL SOIL BORINGS

TABLE OF POINT LOCATIONS

POINT	RAMP C/I-64 STA.	RAMP C/I-64 OFF.	NORTHING	EASTING
BEGIN	14+00.00	39.0' RT	137020.79	102427.03
KINK PT. 1	13+40.00	39.0' RT	136972.61	102462.80
KINK PT. 2	12+50.00	39.0' RT	136907.26	102517.63
KINK PT. 3	10+45.00	57.5' RT	136801.69	102678.21
KINK PT. 4	10+45.00	27.0' RT	136775.52	102662.47
KINK PT. 5	772+42.19	126.8' LT	136690.71	102871.13
KINK PT. 6	773+21.44	123.3' LT	136673.07	102946.25
KINK PT. 7	774+94.33	114.2' LT	136637.61	103111.13
KINK PT. 8	783+11.63	91.0' LT	136574.82	103907.28
END	816+20.00	91.0' LT	136692.66	107213.55

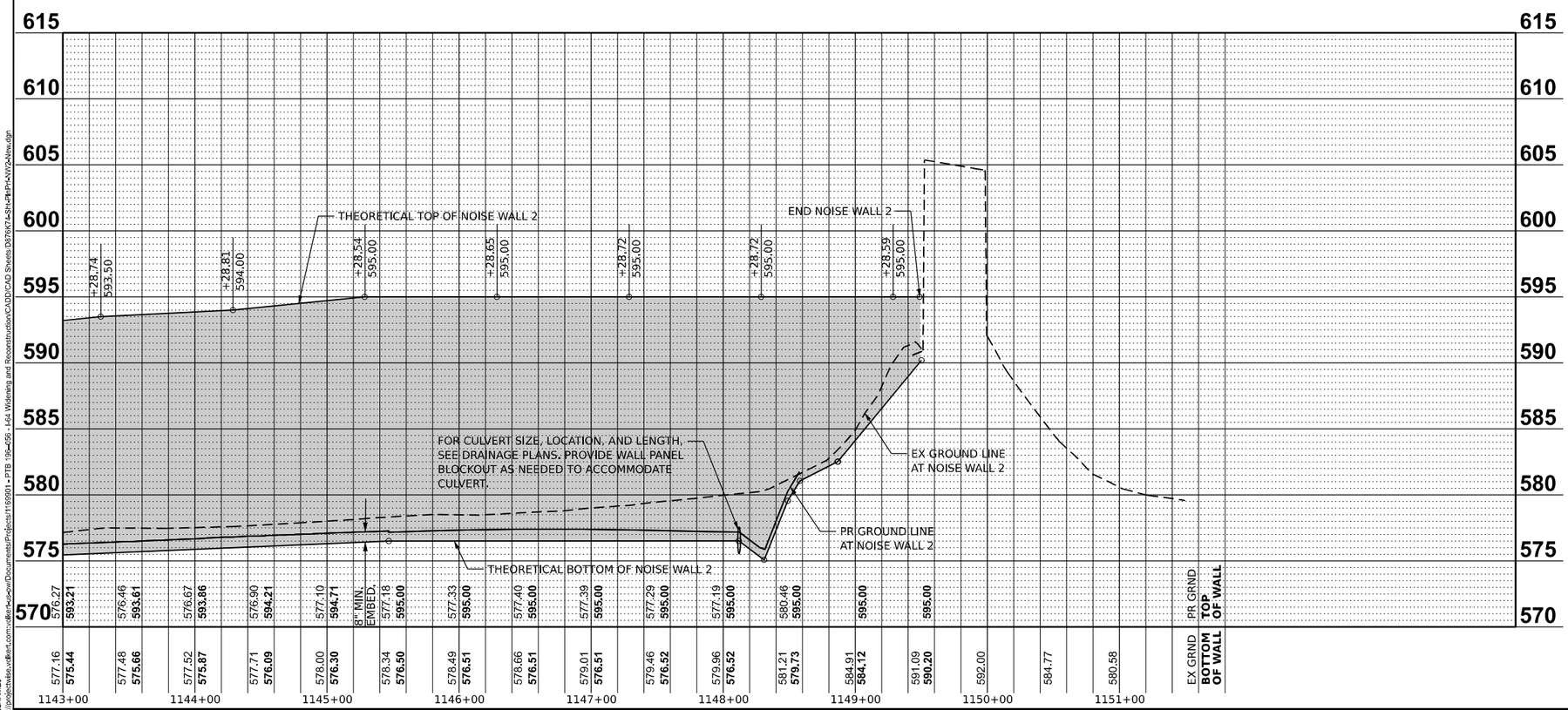

GENERAL PLAN & ELEVATION
NOISE ABATEMENT WALL
F.A.I. RTE. 64
SECTION 82-7WRS-2
ST. CLAIR COUNTY
STA. 14+00.00
TO STA 816+20.00

MODEL: $MODELNAME$
FILE NAME: pw://projectwise.volkert.com:volkertwise/Documents/Projects/1169991 • PTB 195-056 - I-64 Widening and Reconstruction/CADD/CAD Sheets D976K74-Sht-PltPrt-NW2-New.dgn

VOLKERT

USER NAME =	DESIGNED - SJN	REVISED -	
	DRAWN - MAM	REVISED -	
PLOT SCALE = 0.16666633 ' / in.	CHECKED - JLS	REVISED -	
PLOT DATE = 5/2/2024	DATE - 9-10-24	REVISED -	

STATE OF ILLINOIS
DEPARTMENT OF TRANSPORTATION

PLAN & ELEVATION - NOISE WALL 2
I-64 WIDENING AND RECONSTRUCTION

SCALE: 1"=50' | SHEET 8 OF 38 SHEETS | STA. 1143+00 TO STA. 1151+00

F.A.I. RTE.	SECTION	COUNTY	TOTAL SHEETS	SHEET NO.
64	82-7HB-1	ST. CLAIR	691	427

CONTRACT NO. 76K74

ILLINOIS | FED. AID PROJECT

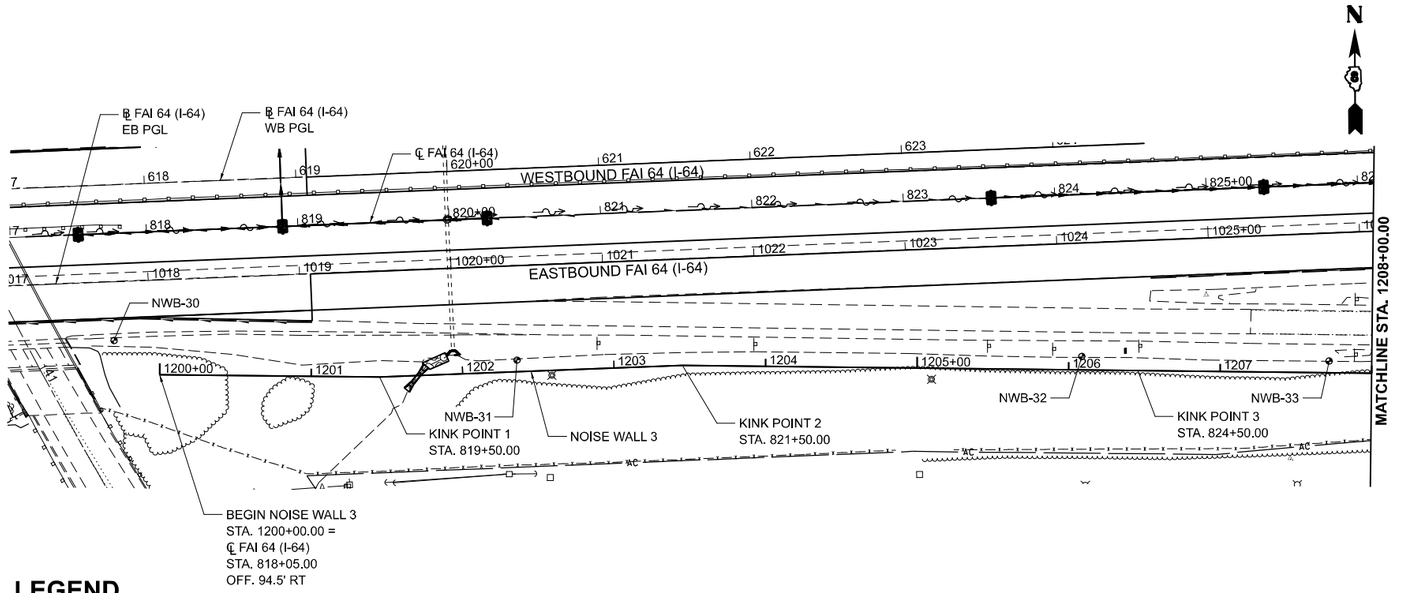

LEGEND

NOISE WALL SOIL BORINGS

0 50 100 150
SCALE IN FEET

TABLE OF POINT LOCATIONS

POINT	I-64 STA.	I-64 OFF.	NORTHING	EASTING
BEGIN	818+05.00	94.5' RT	136513.87	107405.54
KINK PT. 1	819+50.00	101.9' RT	136511.70	107550.71
KINK PT. 2	821+50.00	102.2' RT	136518.44	107750.60
KINK PT. 3	824+50.00	117.7' RT	136513.71	108050.95
KINK PT. 4	827+50.00	133.1' RT	136508.98	108351.31
END	833+40.22	181.9' RT	136481.26	108942.89

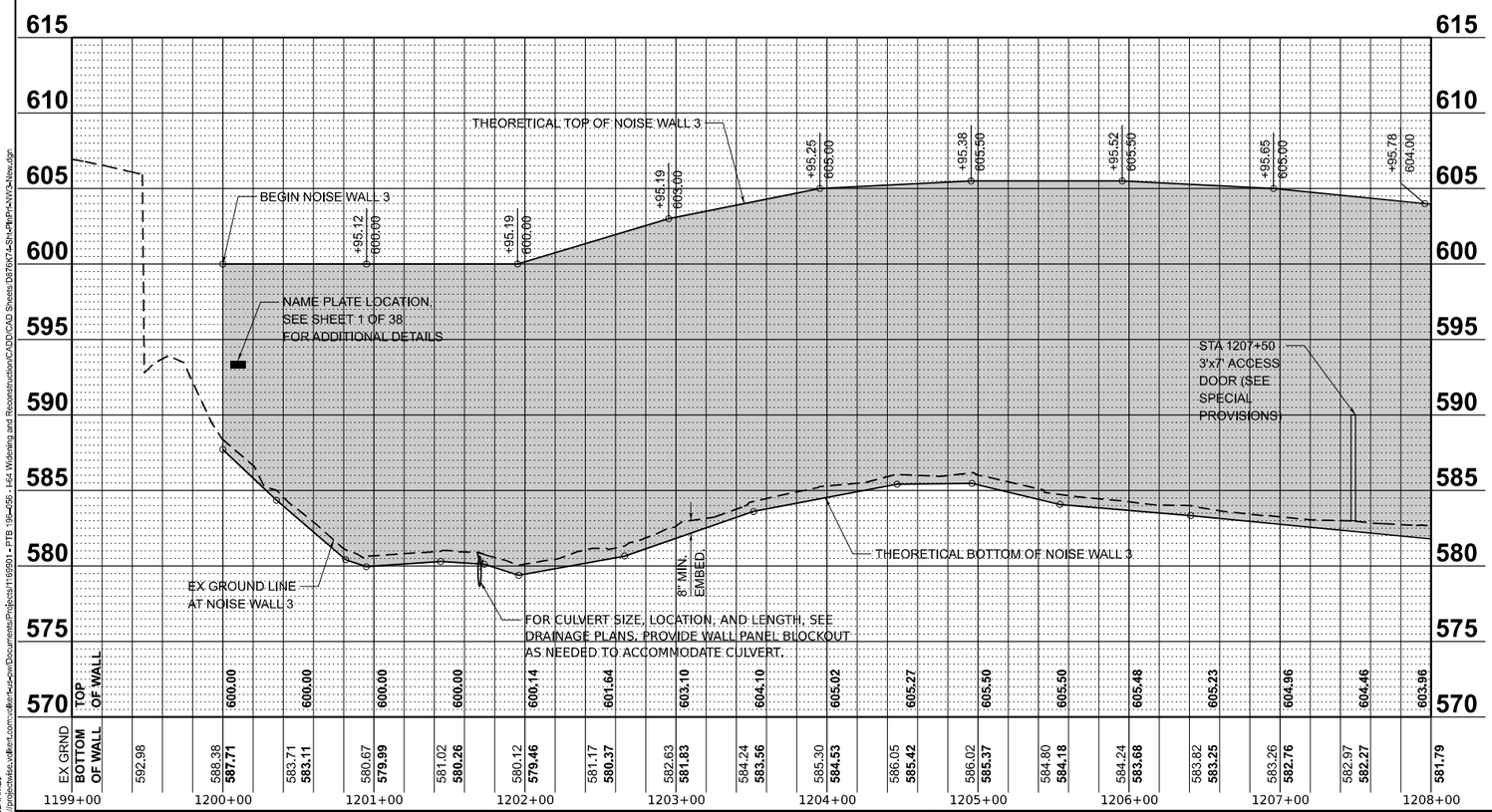

NOISE ABATEMENT WALL
BUILT (YEAR) BY
STATE OF ILLINOIS
FAI 64
SECTION 82-7WRS-2
FROM STA. (818+05) TO STA. (833+40.22)
STRUCTURE NO. 082-N6454

NAME PLATE
SEE STD. 515001

GENERAL PLAN & ELEVATION
NOISE ABATEMENT WALL
F.A.I. RTE. 64
SECTION 82-7WRS-2
ST. CLAIR COUNTY
STA. 818+05.00
TO STA 833+40.22

MODEL: $MODELNAME$
FILE NAME: pw://projectwise.volkert.com:volkert-ka-pw/Documents/Projects/1169991 • PTB 195--056 - I-64 Widening and Reconstruction/CADD/CAD Sheets/D76K74-Sht-PltPrt-NW3-New.dgn

VOLKERT

USER NAME =	DESIGNED - SJN	REVISED -	
	DRAWN - MAM	REVISED -	
PLOT SCALE = 0.16666633 ' / in.	CHECKED - JLS	REVISED -	
PLOT DATE = 5/2/2024	DATE - 9-10-24	REVISED -	

STATE OF ILLINOIS
DEPARTMENT OF TRANSPORTATION

PLAN & ELEVATION - NOISE WALL 3
I-64 WIDENING AND RECONSTRUCTION

SCALE: 1"=50' | SHEET 9 OF 38 SHEETS | STA. 1199+00 TO STA. 1208+00

F.A.I. RTE.	SECTION	COUNTY	TOTAL SHEETS	SHEET NO.
64	82-7HB-1	ST. CLAIR	691	428
		CONTRACT NO. 76K74		
	ILLINOIS	FED. AID PROJECT		

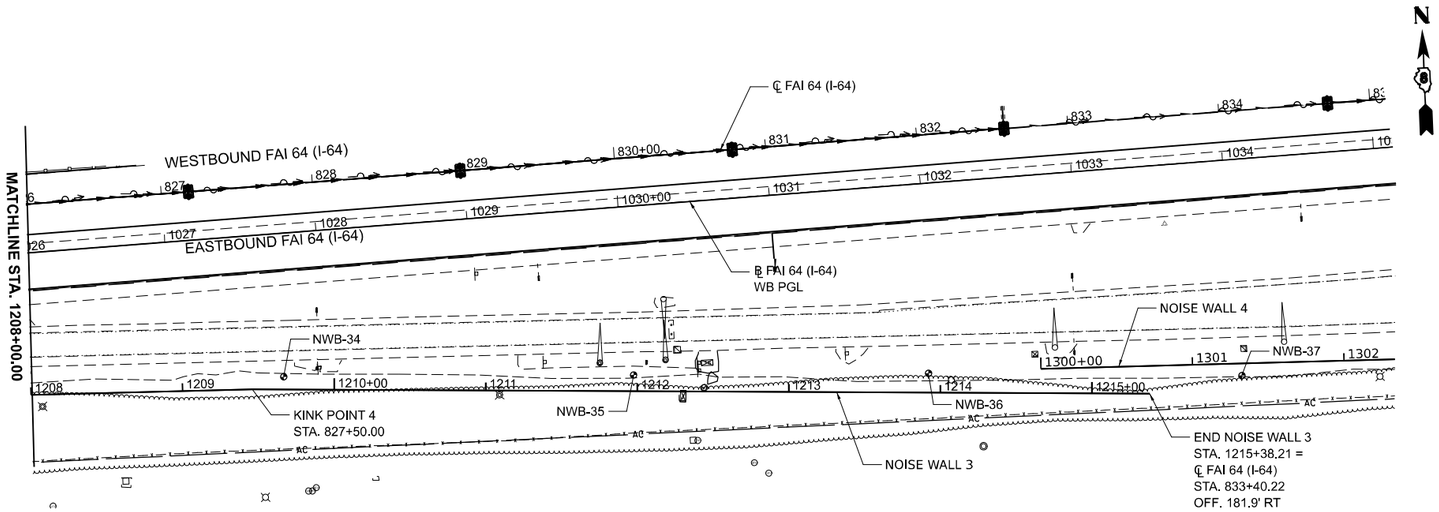

LEGEND

NOISE WALL SOIL BORINGS

0 50 100 150
SCALE IN FEET

TABLE OF POINT LOCATIONS

POINT	I-64 STA.	I-64 OFF.	NORTHING	EASTING
BEGIN	818+05.00	94.5' RT	136513.87	107405.54
KINK PT. 1	819+50.00	101.9' RT	136511.70	107550.71
KINK PT. 2	821+50.00	102.2' RT	136518.44	107750.60
KINK PT. 3	824+50.00	117.7' RT	136513.71	108050.95
KINK PT. 4	827+50.00	133.1' RT	136508.98	108351.31
END	833+40.22	181.9' RT	136481.26	108942.89

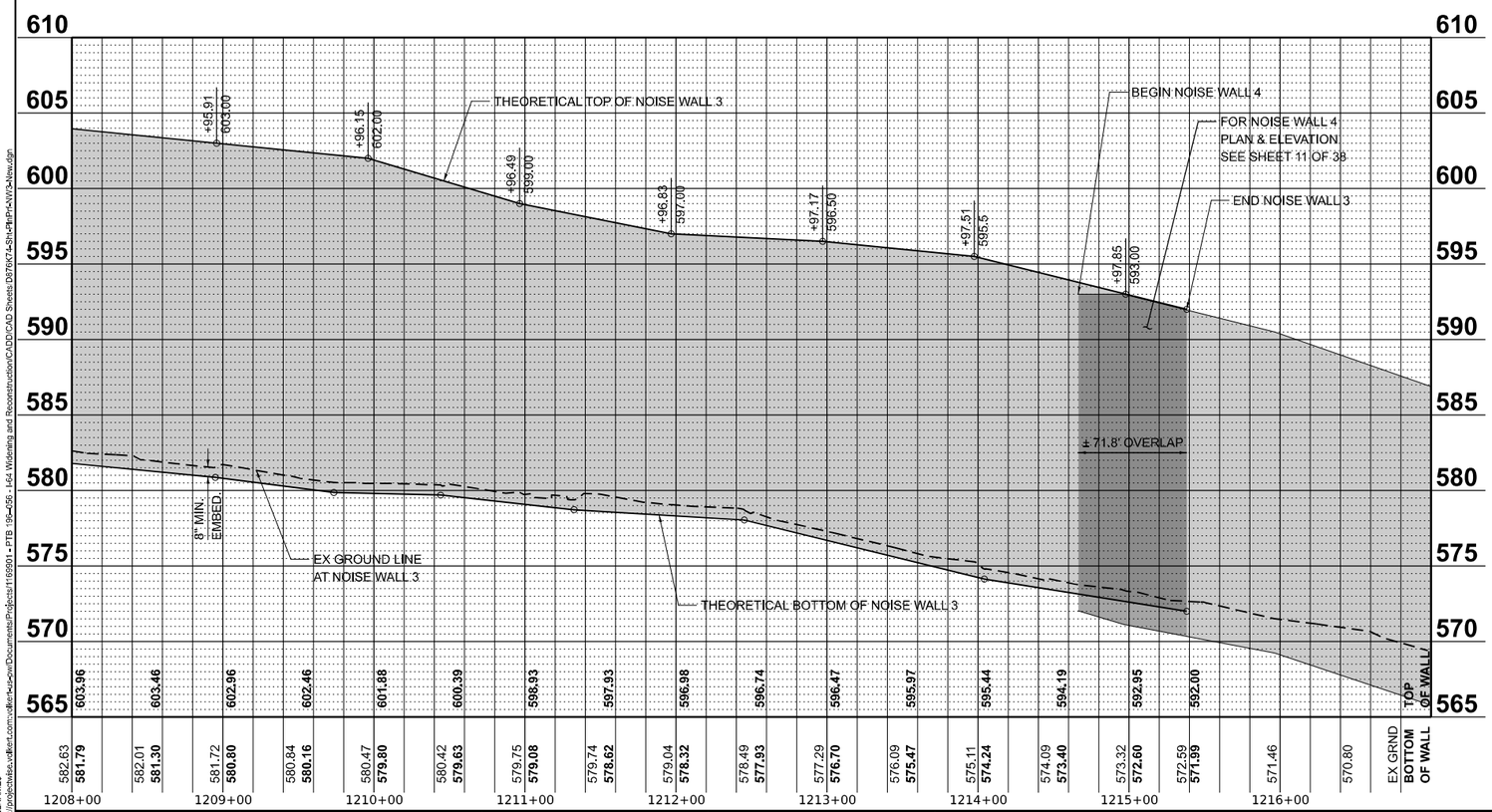

GENERAL PLAN & ELEVATION
NOISE ABATEMENT WALL
F.A.I. RTE. 64
SECTION 82-7WRS-2
ST. CLAIR COUNTY
STA. 818+05.00
TO STA 833+40.22

MODEL: $MODELNAME$
FILE NAME: pw://projectwise.volkert.com:volkertwise-pw/Documents/Projects/1166991 • PTB 195-J256: I-64 Widening and Reconstruction/CADD/CAD Sheets/D76K74-Sh-PlnPrf-NW3-Alnw.dgn

VOLKERT

USER NAME =	DESIGNED - SJN	REVISED -	
	DRAWN - MAM	REVISED -	
PLOT SCALE = 0.16666633 ' / in.	CHECKED - JLS	REVISED -	
PLOT DATE = 5/2/2024	DATE - 9-10-24	REVISED -	

STATE OF ILLINOIS
DEPARTMENT OF TRANSPORTATION

PLAN & ELEVATION - NOISE WALL 3
I-64 WIDENING AND RECONSTRUCTION

SCALE: 1"=50' | SHEET 10 OF 38 SHEETS | STA. 1208+00 TO STA. 1215+38.21

F.A.I. RTE.	SECTION	COUNTY	TOTAL SHEETS	SHEET NO.
64	82-7.1B-1	ST. CLAIR	691	429

CONTRACT NO. 76K74

ILLINOIS | FED. AID PROJECT

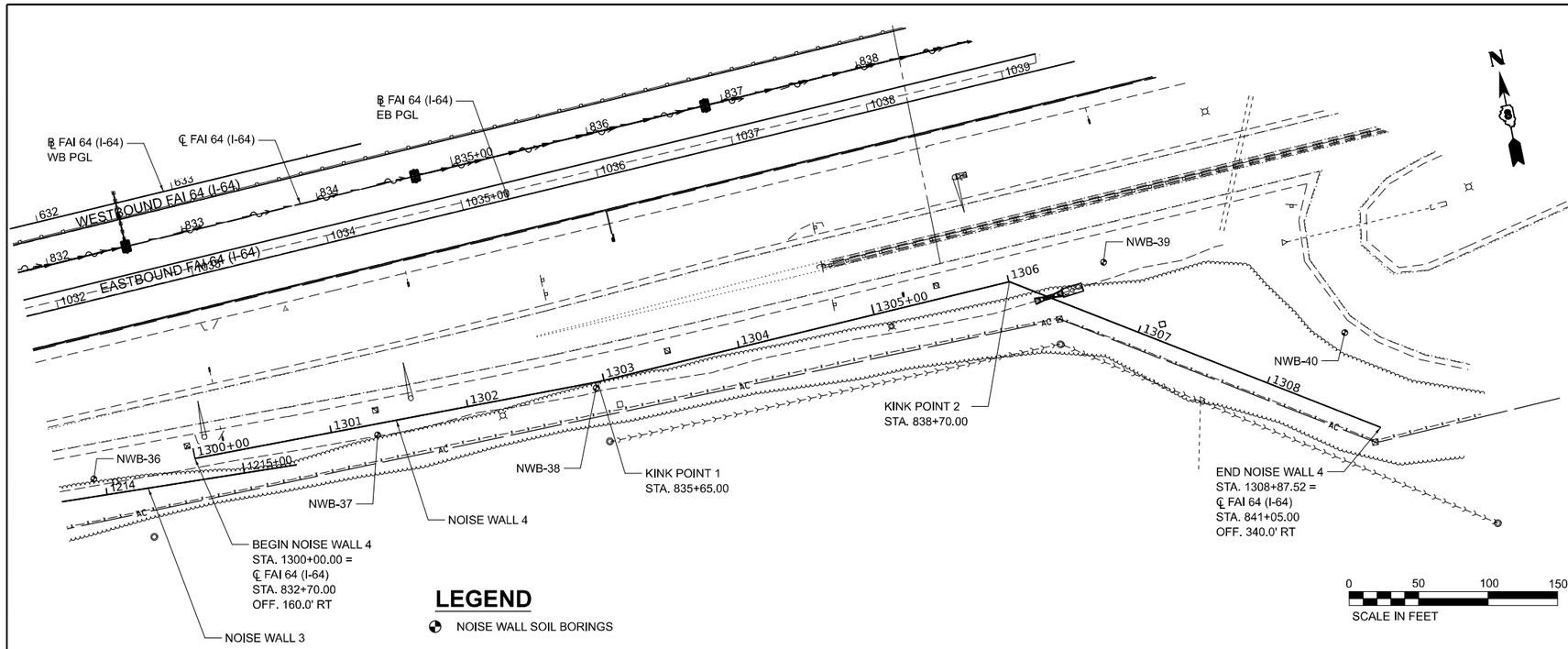

TABLE OF POINT LOCATIONS

POINT	I-64 STA	I-64 OFF.	NORTHING	EASTING
BEGIN	832+70.00	160.0' RT	136500.61	108871.94
KINK PT. 1	835+65.00	175.0' RT	136496.13	109167.29
KINK PT. 2	838+70.00	175.0' RT	136506.99	109472.10
END	841+05.00	340.0' RT	136350.47	109712.82

LEGEND

NOISE WALL SOIL BORINGS

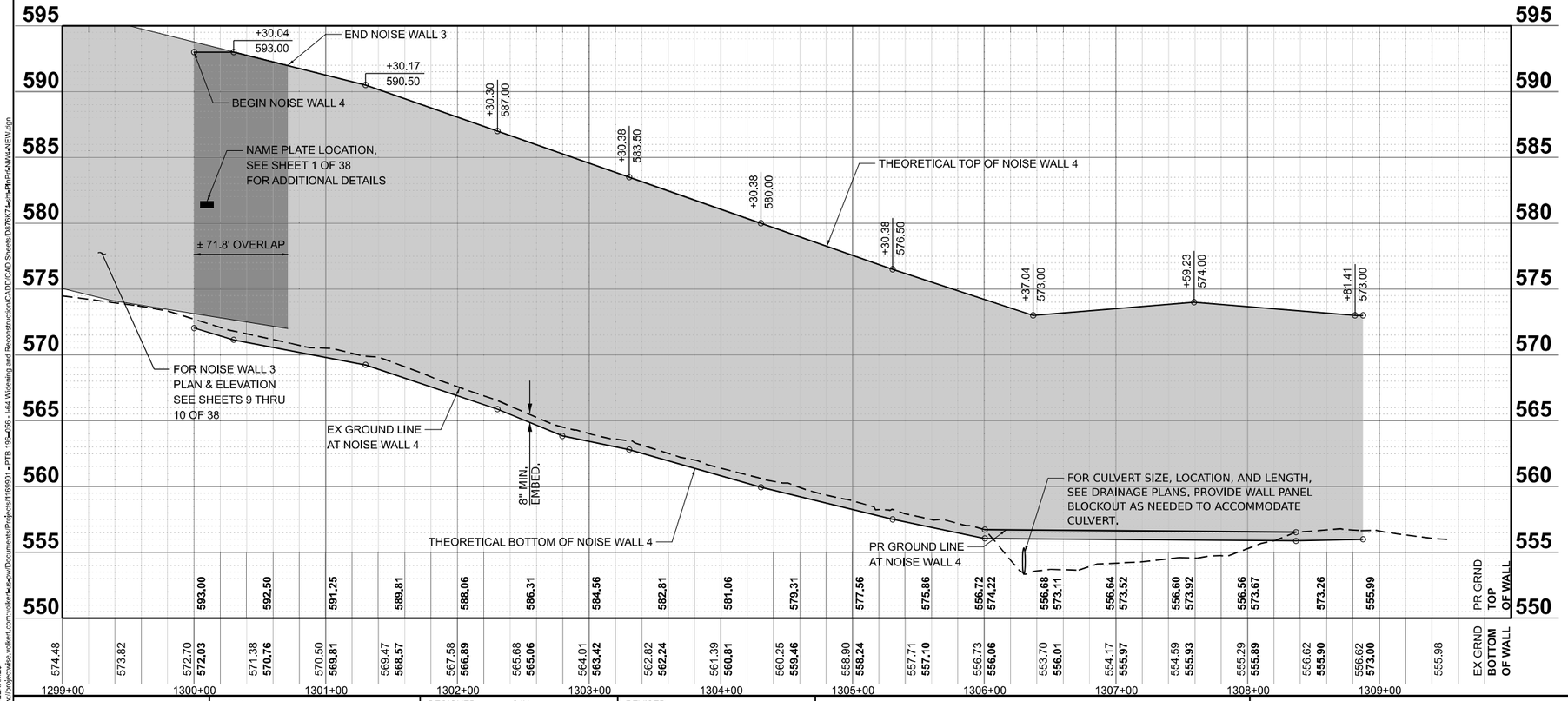

NOISE ABATEMENT WALL
BUILT (YEAR) BY
STATE OF ILLINOIS
FAI 64
SECTION 82-7WRS-2
FROM STA. (832+70) TO STA. (841+05)
STRUCTURE NO. 082-N6455

NAME PLATE
SEE STD. 515001

GENERAL PLAN & ELEVATION
NOISE ABATEMENT WALL
F.A.I. RTE. 64
SECTION 82-7WRS-2
ST. CLAIR COUNTY
STA. 832+70.00
TO STA 841+05.00

MODEL: $MODELNAME$
FILE NAME: pw://projectwise.volkert.com:volkert-eu-pw/Documents/Projects/1116901 - PTB 195-R56 - I-64 Widening and Reconstruction/CADD/CAD Sheets/D876K74-sht-PrPl-NW-4-NEW.dgn

VOLKERT

USER NAME =	DESIGNED - SJN	REVISED -	
	DRAWN - MAM	REVISED -	
PLOT SCALE = 0.16666633 ' / in.	CHECKED - JLS	REVISED -	
PLOT DATE = 5/2/2024	DATE - 9-10-24	REVISED -	

STATE OF ILLINOIS
DEPARTMENT OF TRANSPORTATION

PLAN & ELEVATION - NOISE WALL 4
I-64 WIDENING AND RECONSTRUCTION

SCALE: 1"=50' | SHEET 11 OF 38 SHEETS | STA. TO STA. 1308+87.52

F.A.I. RTE.	SECTION	COUNTY	TOTAL SHEETS	SHEET NO.
64	82-7HB-1	ST. CLAIR	691	430
		CONTRACT NO. 76K74		
		ILLINOIS FED. AID PROJECT		

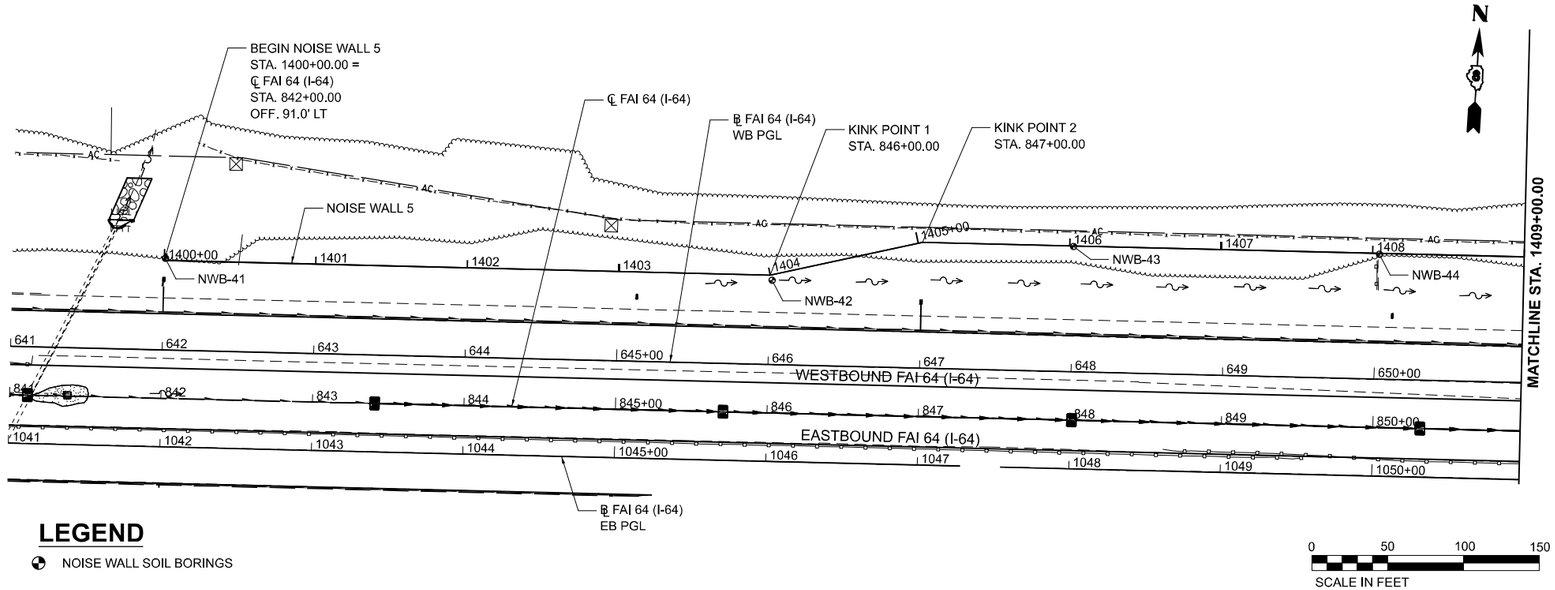

LEGEND

NOISE WALL SOIL BORINGS

TABLE OF POINT LOCATIONS

POINT	I-64 STA.	I-64 OFF.	NORTHING	EASTING
BEGIN	842+00.00	91.0' LT	136784.58	109792.41
KINK PT. 1	846+00.00	91.0' LT	136798.83	110192.16
KINK PT. 2	847+00.00	115.0' LT	136826.37	110291.24
KINK PT. 3	851+00.00	115.0' LT	136840.62	110690.99
KINK PT. 4	858+10.00	115.0' LT	136865.91	111400.53
KINK PT. 5	858+10.00	91.0' LT	136841.93	111401.39
KINK PT. 6	860+00.00	91.0' LT	136848.65	111591.55
KINK PT. 7	861+00.00	101.0' LT	136861.51	111692.00
KINK PT. 8	865+00.00	101.0' LT	136864.79	112095.26
END	865+40.00	111.0' LT	136874.40	112135.71

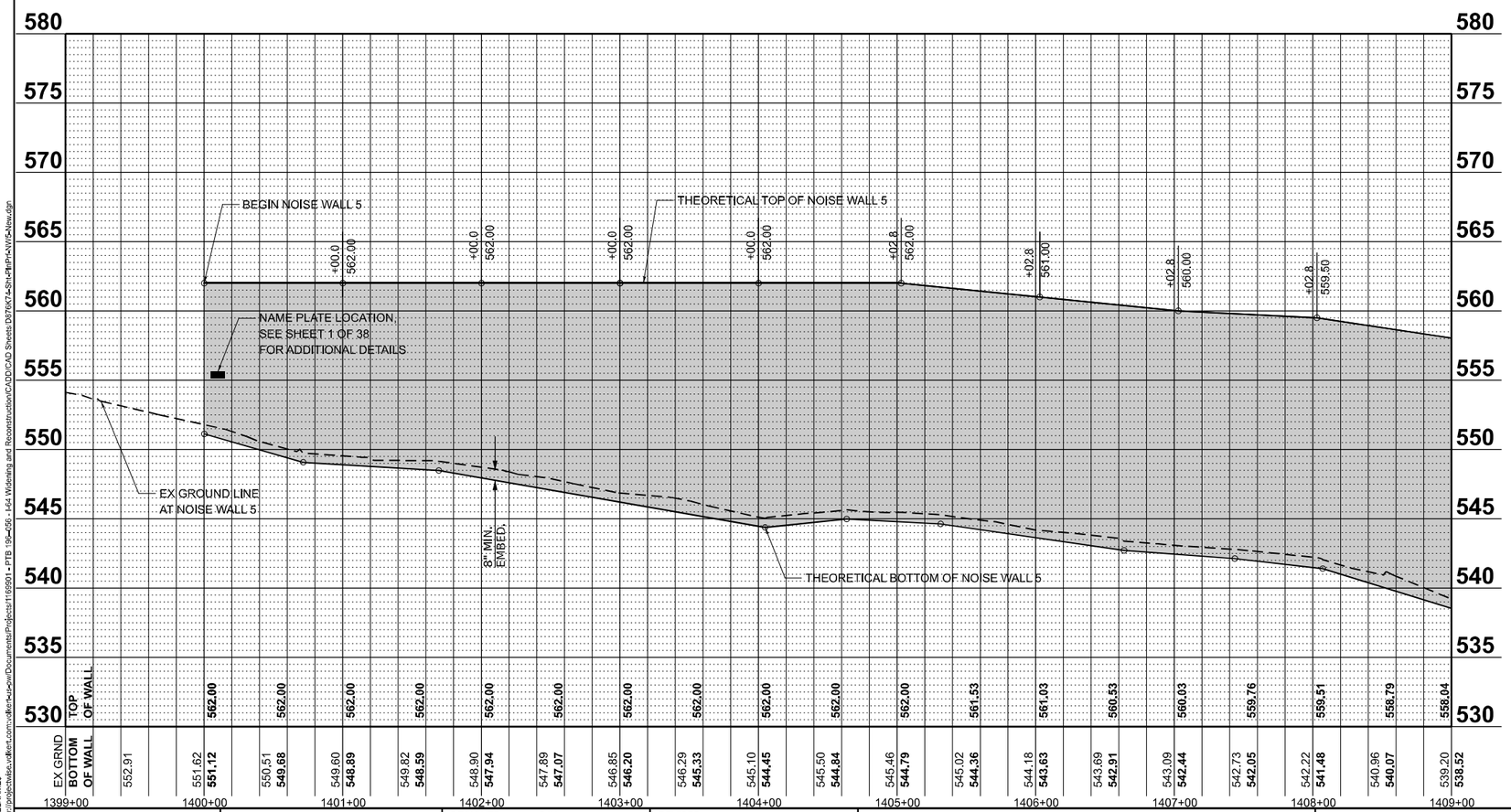

NOISE ABATEMENT WALL
BUILT (YEAR) BY
STATE OF ILLINOIS
FAI 64
SECTION 82-7WRS-2
FROM STA. (842+00) TO STA. (866+54.23)
STRUCTURE NO. 082-N6456

NAME PLATE
SEE STD. 515001

GENERAL PLAN & ELEVATION
NOISE ABATEMENT WALL
F.A.I. RTE. 64
SECTION 82-7WRS-2
ST. CLAIR COUNTY
STA. 842+00.00
TO STA 866+54.23

MODEL: $MODELNAMES
FILE NAME: pw://projectwise.volkert.com:volkert-pw/Documents/Projects/41169501 • PTB 195-056 - I-64 Widening and Reconstruction/CADD/CAD Sheets D976K74-Sht-PltPrf-NW5-New.dgn

VOLKERT

USER NAME =	DESIGNED - SJN	REVISED -	
	DRAWN - MAM	REVISED -	
PLOT SCALE = 0.16666633 ' / in.	CHECKED - JLS	REVISED -	
PLOT DATE = 5/2/2024	DATE - 9-10-24	REVISED -	

STATE OF ILLINOIS
DEPARTMENT OF TRANSPORTATION

PLAN & ELEVATION - NOISE WALL 5
I-64 WIDENING AND RECONSTRUCTION

SCALE: 1"=50' | SHEET 12 OF 38 SHEETS | STA. 1399+00 TO STA. 1409+00

F.A.I. RTE.	SECTION	COUNTY	TOTAL SHEETS	SHEET NO.
64	82-7HB-1	ST. CLAIR	691	431
		CONTRACT NO. 76K74		
		ILLINOIS	FED. AID PROJECT	

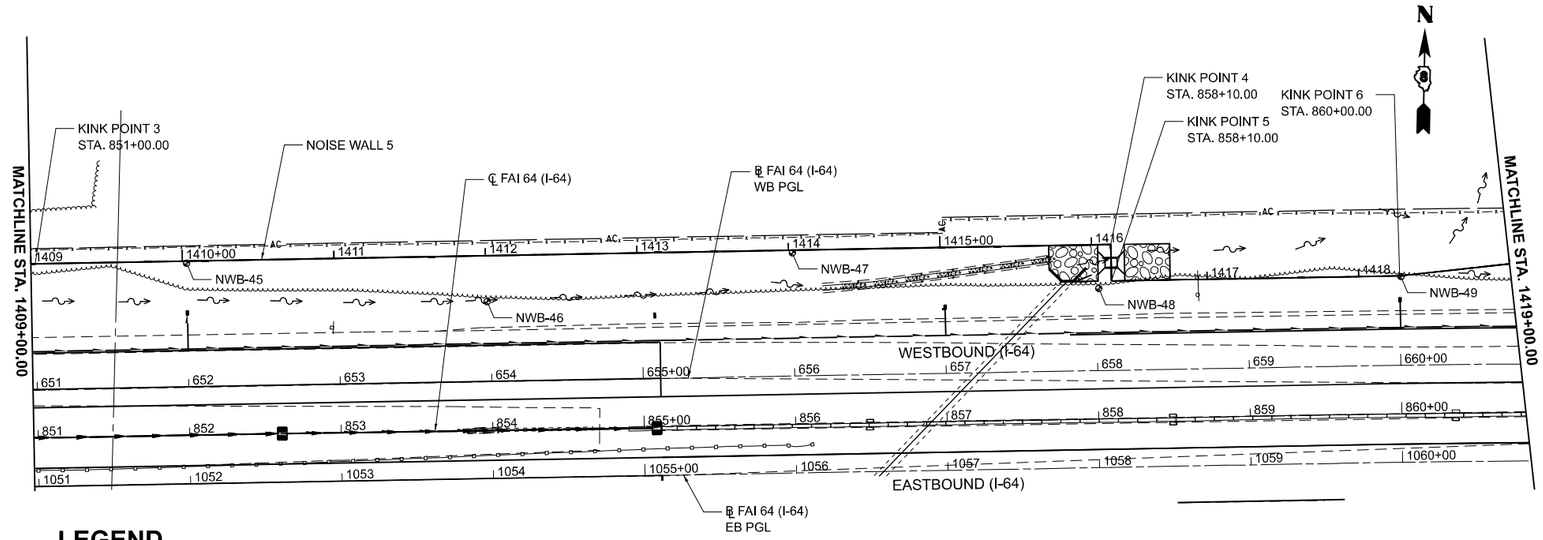

TABLE OF POINT LOCATIONS

POINT	I-64 STA.	I-64 OFF.	NORTHING	EASTING
BEGIN	842+00.00	91.0' LT	136784.58	109792.41
KINK PT. 1	846+00.00	91.0' LT	136798.83	110192.16
KINK PT. 2	847+00.00	115.0' LT	136826.37	110291.24
KINK PT. 3	851+00.00	115.0' LT	136840.62	110690.99
KINK PT. 4	858+10.00	115.0' LT	136865.91	111400.53
KINK PT. 5	858+10.00	91.0' LT	136841.93	111401.39
KINK PT. 6	860+00.00	91.0' LT	136848.65	111591.55
KINK PT. 7	861+00.00	101.0' LT	136861.51	111692.00
KINK PT. 8	865+00.00	101.0' LT	136864.79	112095.26
END	865+40.00	111.0' LT	136874.40	112135.71

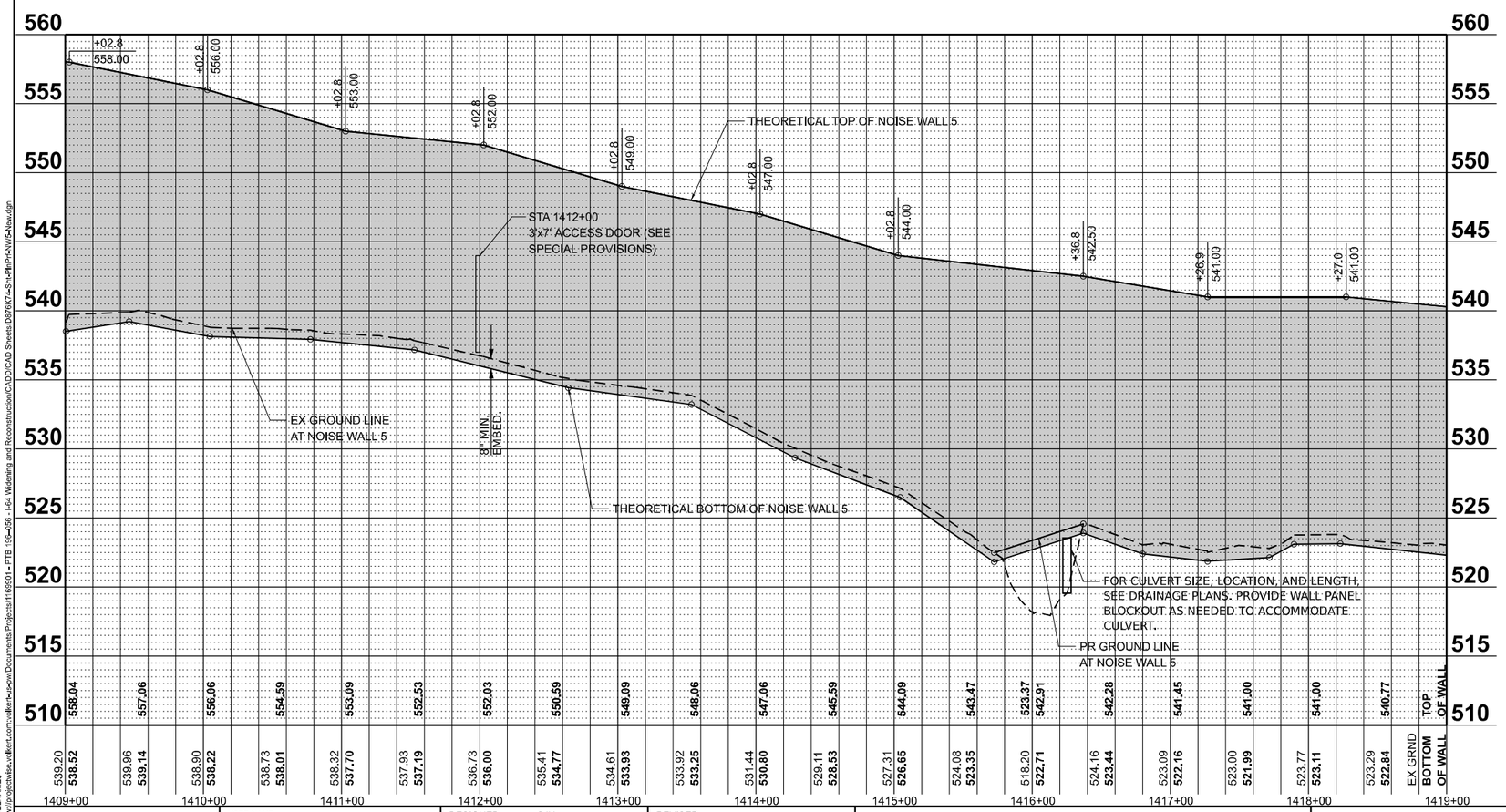

GENERAL PLAN & ELEVATION
NOISE ABATEMENT WALL
F.A.I. RTE. 64
SECTION 82-7WRS-2
ST. CLAIR COUNTY
STA. 842+00.00
TO STA 866+54.23

MODEL: $MODELNAME$
FILE NAME: pw://projectwise.volkert.com:volkert-pw/Documents/Projects/116991 • PTB 195-056: I-64 Widening and Reconstruction/CADD/CAD Sheets/D876K7-Sht-Plt-PI-AW5-New.dgn

VOLKERT

USER NAME =	DESIGNED - SJN	REVISED -	
	DRAWN - MAM	REVISED -	
PLOT SCALE = 0.16666633 ' / in.	CHECKED - JLS	REVISED -	
PLOT DATE = 5/2/2024	DATE - 9-10-24	REVISED -	

STATE OF ILLINOIS
DEPARTMENT OF TRANSPORTATION

PLAN & ELEVATION - NOISE WALL 5
I-64 WIDENING AND RECONSTRUCTION

SCALE: 1"=50' | SHEET 13 OF 38 SHEETS | STA. 1409+00 TO STA. 1419+00

F.A.I. RTE.	SECTION	COUNTY	TOTAL SHEETS	SHEET NO.
64	82-7HB-1	ST. CLAIR	691	432

CONTRACT NO. 76K74
ILLINOIS | FED. AID PROJECT

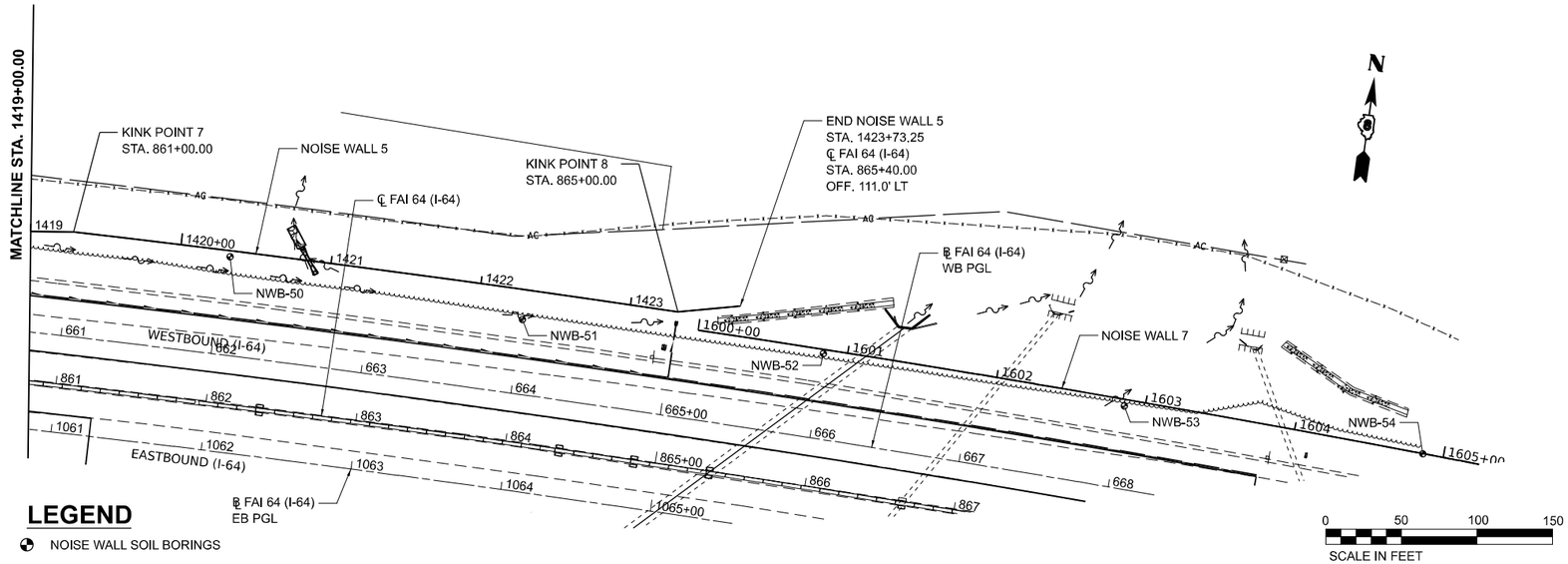

LEGEND

NOISE WALL SOIL BORINGS

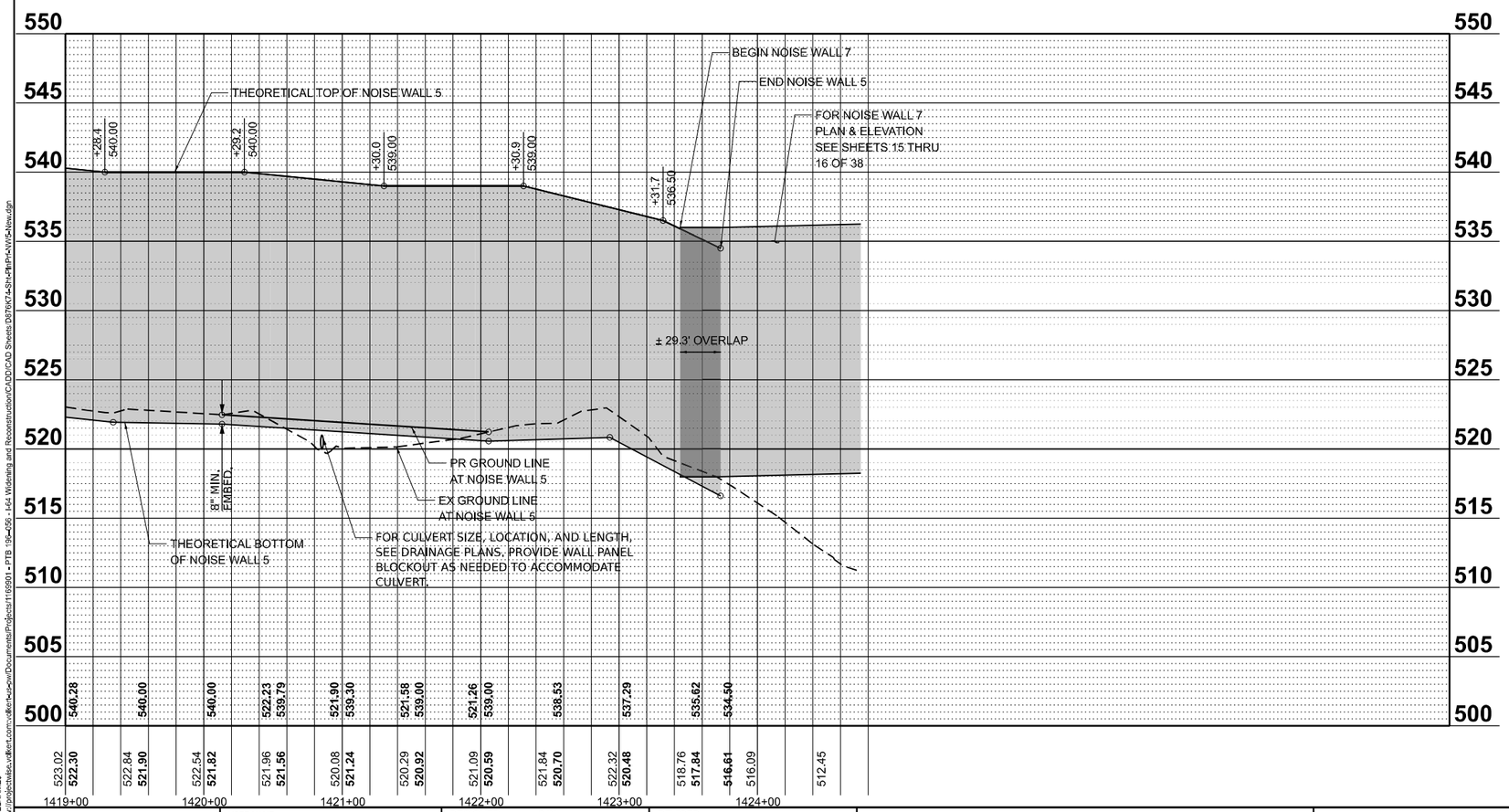

TABLE OF POINT LOCATIONS

POINT	I-64 STA.	I-64 OFF.	NORTHING	EASTING
BEGIN	842+00.00	91.0' LT	136784.58	109792.41
KINK PT. 1	846+00.00	91.0' LT	136798.83	110192.16
KINK PT. 2	847+00.00	115.0' LT	136826.37	110291.24
KINK PT. 3	851+00.00	115.0' LT	136840.62	110690.99
KINK PT. 4	858+10.00	115.0' LT	136865.91	111400.53
KINK PT. 5	858+10.00	91.0' LT	136841.93	111401.39
KINK PT. 6	860+00.00	91.0' LT	136848.65	111591.55
KINK PT. 7	861+00.00	101.0' LT	136861.51	111692.00
KINK PT. 8	865+00.00	101.0' LT	136864.79	112095.26
END	865+40.00	111.0' LT	136874.40	112135.71

GENERAL PLAN & ELEVATION
NOISE ABATEMENT WALL
F.A.I. RTE. 64
SECTION 82-7WRS-2
ST. CLAIR COUNTY
STA. 842+00.00
TO STA 866+54.23

MODEL: $MODELNAME$
FILE NAME: pw://projectwise.volkert.com:volkert-pw/Documents/Projects/41169901 - PTB 195-056 - I-64 Widening and Reconstruction/CADD/CAD Sheets D376K74-SJN-PlnPrf-NW5-New.dgn

VOLKERT

USER NAME =	DESIGNED - SJN	REVISED -	
	DRAWN - MAM	REVISED -	
PLOT SCALE = 0.16666633 ' / in.	CHECKED - JLS	REVISED -	
PLOT DATE = 5/2/2024	DATE - 9-10-24	REVISED -	

STATE OF ILLINOIS
DEPARTMENT OF TRANSPORTATION

PLAN & ELEVATION - NOISE WALL 5
I-64 WIDENING AND RECONSTRUCTION

SCALE: 1"=50' | SHEET 14 OF 38 SHEETS | STA. 1419+00 TO STA. 1423+73.25

F.A.I. RTE.	SECTION	COUNTY	TOTAL SHEETS	SHEET NO.
64	82-7HB-1	ST. CLAIR	691	433
		CONTRACT NO. 76K74		
		ILLINOIS	FED. AID PROJECT	

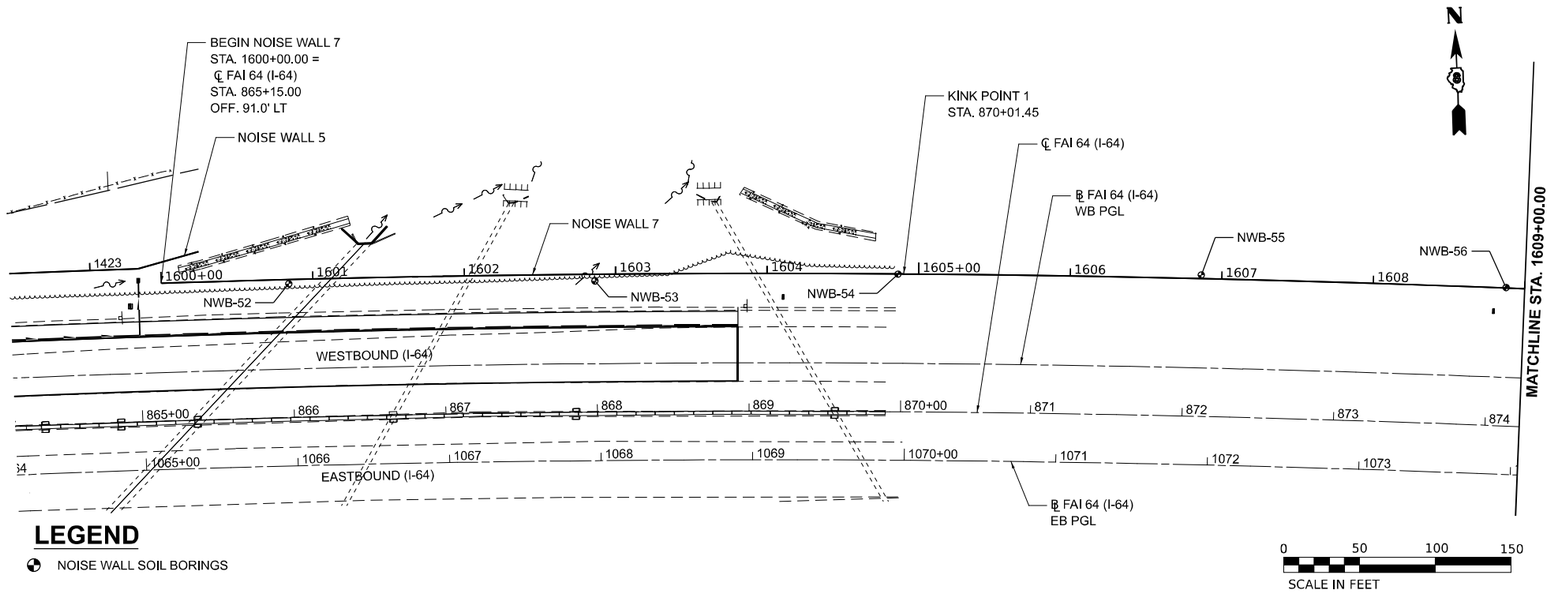

LEGEND

NOISE WALL SOIL BORINGS

TABLE OF POINT LOCATIONS				
POINT	I-64 STA.	I-64 OFF.	NORTHING	EASTING
BEGIN	865+15.00	91.0' LT	136854.66	112110.29
KINK PT. 1	870+01.45	91.0' LT	136840.36	112600.10
END	879+80.00	91.0' LT	136754.77	113567.57

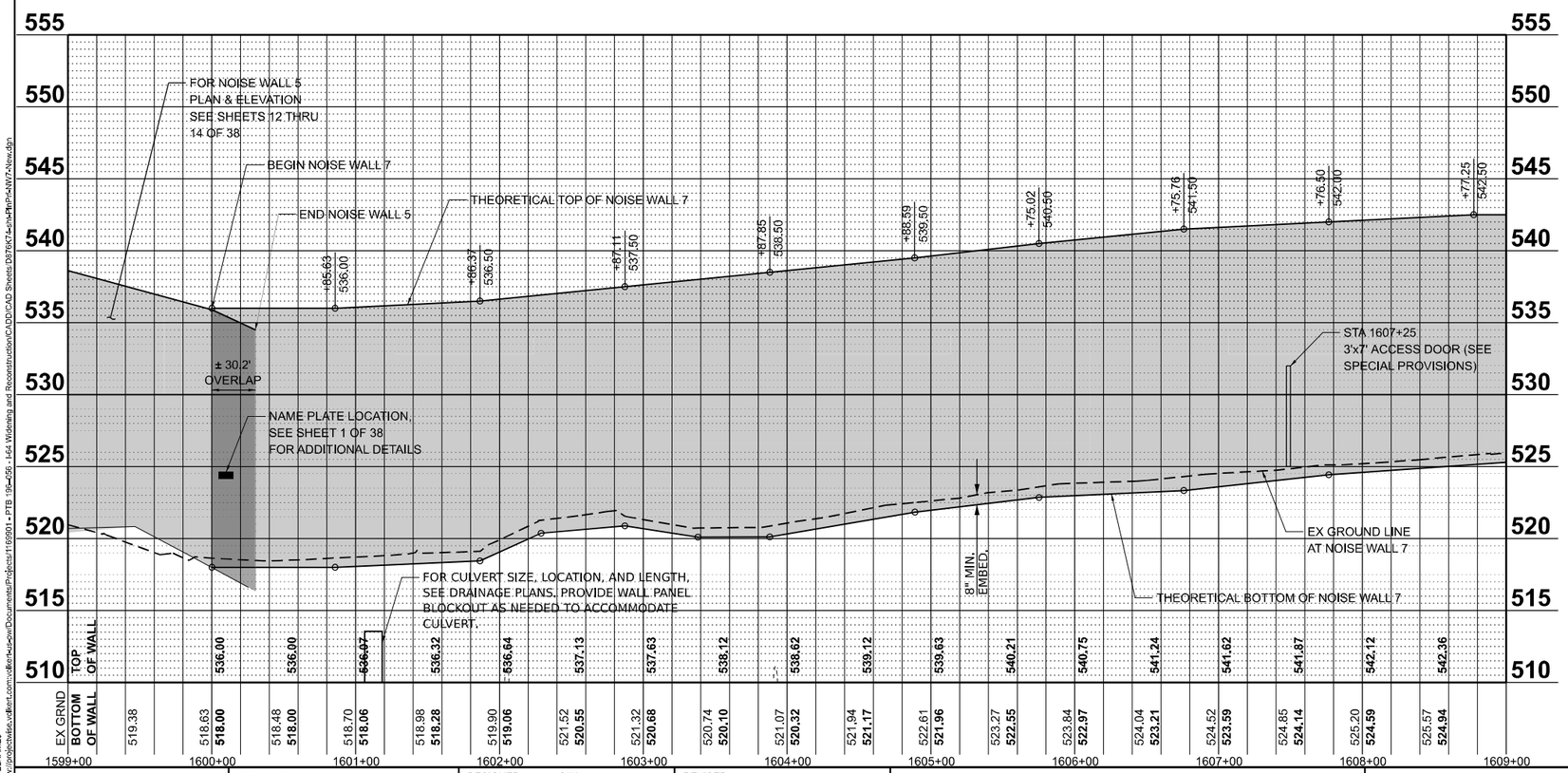

NOISE ABATEMENT WALL
BUILT (YEAR) BY
STATE OF ILLINOIS
FAI 64
SECTION 82-7WRS-2
FROM STA. (865+15) TO STA. (879+80)
STRUCTURE NO. 082-N6458

NAME PLATE
SEE STD. 515001

GENERAL PLAN & ELEVATION
NOISE ABATEMENT WALL
F.A.I. RTE. 64
SECTION 82-7WRS-2
ST. CLAIR COUNTY
STA. 865+15.00
TO STA 879+80.00

MODEL: $MODELNAMES
FILE NAME: pw://projectwise.volkert.com:volkert-eu-pw/Documents/Projects/1169901 - PTB 99-456 - I-64 Widening and Reconstruction/CADD/CAD Sheets/D876K74-sht-PrPl-NW7-New.dgn

VOLKERT

USER NAME =	DESIGNED - SJN	REVISED -	
	DRAWN - MAM	REVISED -	
PLOT SCALE = 0.16666633 ' / in.	CHECKED - JLS	REVISED -	
PLOT DATE = 5/2/2024	DATE - 9-10-24	REVISED -	

STATE OF ILLINOIS
DEPARTMENT OF TRANSPORTATION

PLAN & ELEVATION - NOISE WALL 7
I-64 WIDENING AND RECONSTRUCTION

SCALE: 1"=50' | SHEET 15 OF 38 SHEETS | STA. 1599+00 TO STA. 1609+00

F.A.I. RTE.	SECTION	COUNTY	TOTAL SHEETS	SHEET NO.
64	82-7HB-1	ST. CLAIR	691	434
		CONTRACT NO. 76K74		
		ILLINOIS FED. AID PROJECT		

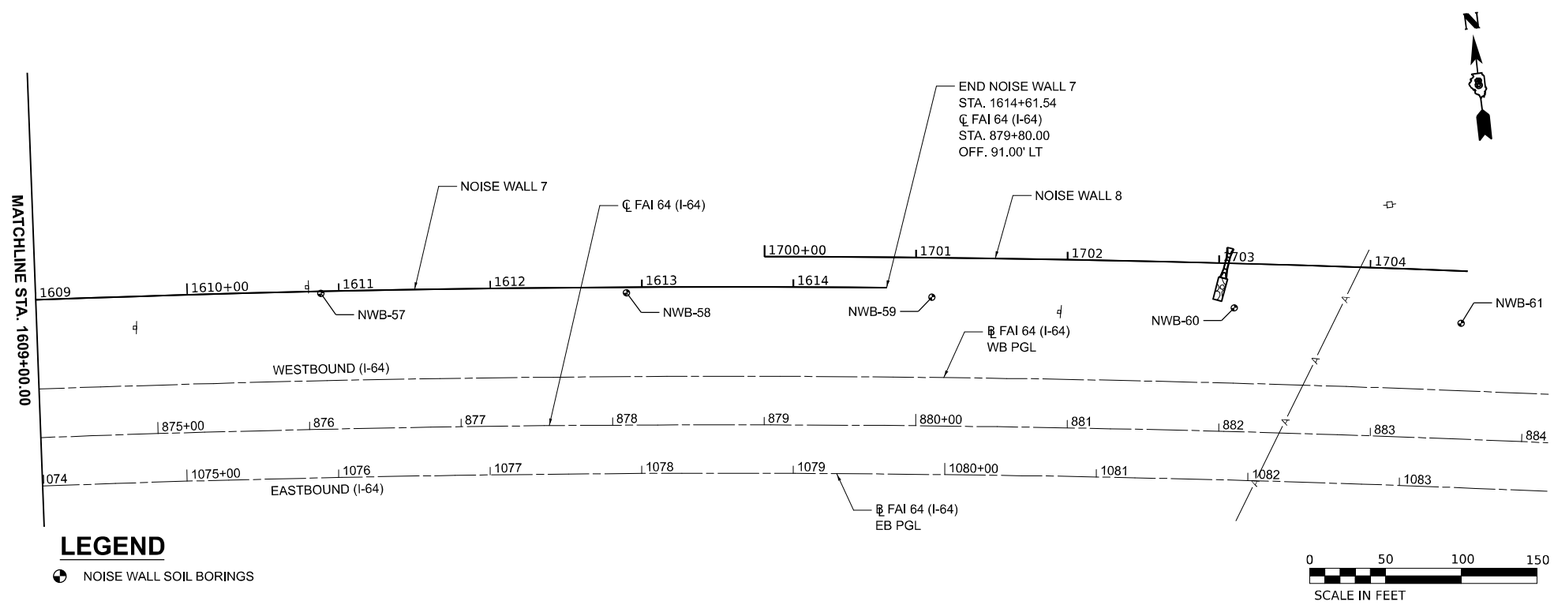

LEGEND

NOISE WALL SOIL BORINGS

TABLE OF POINT LOCATIONS				
POINT	I-64 STA.	I-64 OFF.	NORTHING	EASTING
BEGIN	865+15.00	91.0' LT	136854.66	112110.29
KINK PT. 1	870+01.45	91.0' LT	136840.36	112600.10
END	879+80.00	91.0' LT	136754.77	113567.57

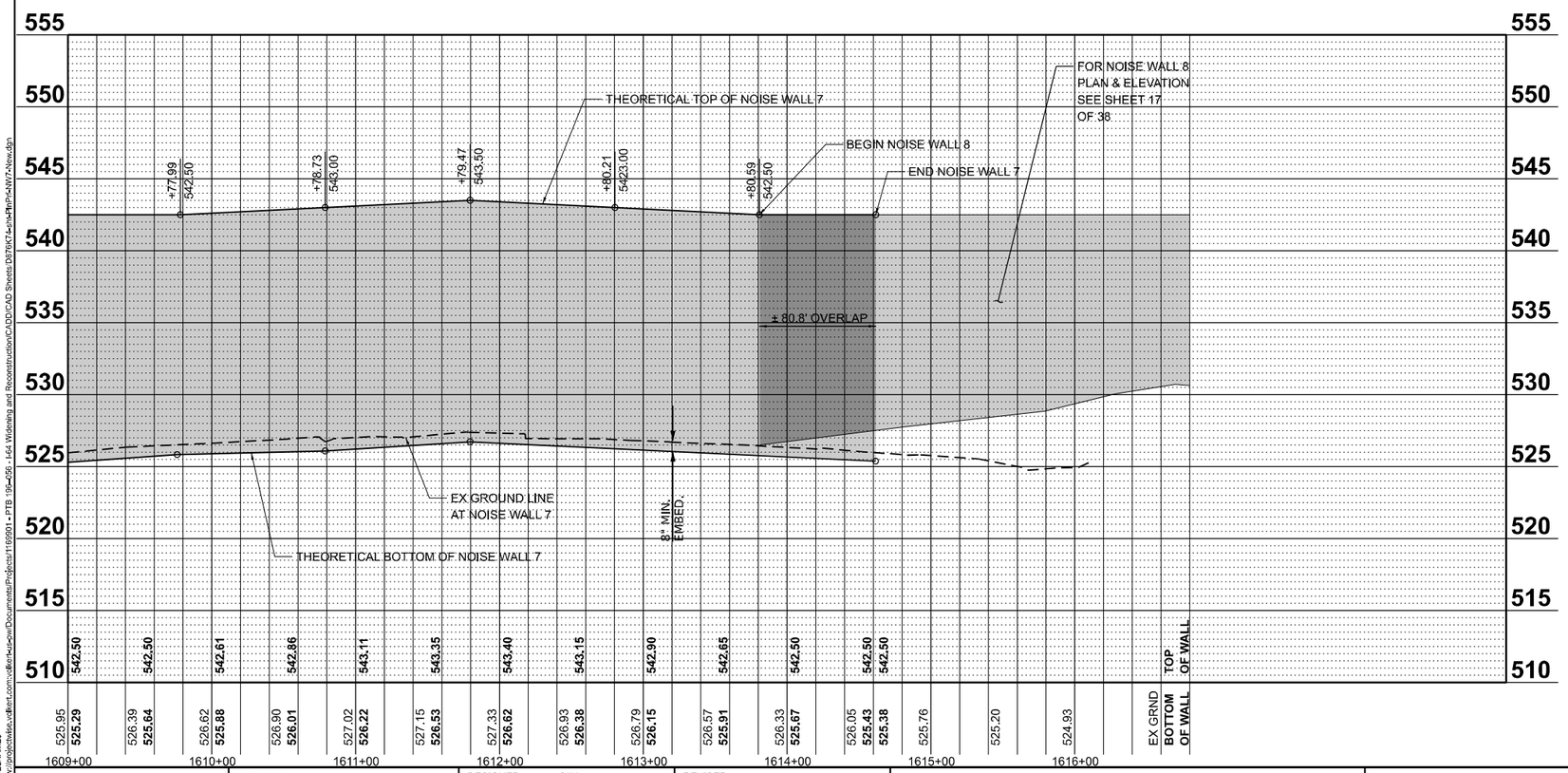

GENERAL PLAN & ELEVATION
NOISE ABATEMENT WALL
F.A.I. RTE. 64
SECTION 82-7WRS-2
ST. CLAIR COUNTY
STA. 865+15.00
TO STA 879+80.00

MODEL: $MODELNAME
FILE NAME: pw://projectwise.volkert.com:volkert-eu-pw/Documents/Projects/1169901 - PTB 99-456 - I-64 Widening and Reconstruction/CADD/CAD Sheets/D76K74-sht-PlnPrfl-NW7-New.dgn

VOLKERT

USER NAME =	DESIGNED - SJN	REVISED -	
	DRAWN - MAM	REVISED -	
PLOT SCALE = 0.16666633 ' / in.	CHECKED - JLS	REVISED -	
PLOT DATE = 5/2/2024	DATE - 9-10-24	REVISED -	

STATE OF ILLINOIS
DEPARTMENT OF TRANSPORTATION

PLAN & ELEVATION - NOISE WALL 7
I-64 WIDENING AND RECONSTRUCTION

SCALE: 1"=50' | SHEET 16 OF 38 SHEETS | STA. 1609+00 TO STA. 1614+61.54

F.A.I. RTE.	SECTION	COUNTY	TOTAL SHEETS	SHEET NO.
64	82-7HB-1	ST. CLAIR	691	435
		CONTRACT NO. 76K74		
		ILLINOIS	FED. AID PROJECT	

TABLE OF POINT LOCATIONS				
POINT	I-64 STA.	I-64 OFF.	NORTHING	EASTING
BEGIN	879+00.00	111.0' LT	136784.61	113490.01
END	883+60.00	111.0' LT	136719.98	113949.62

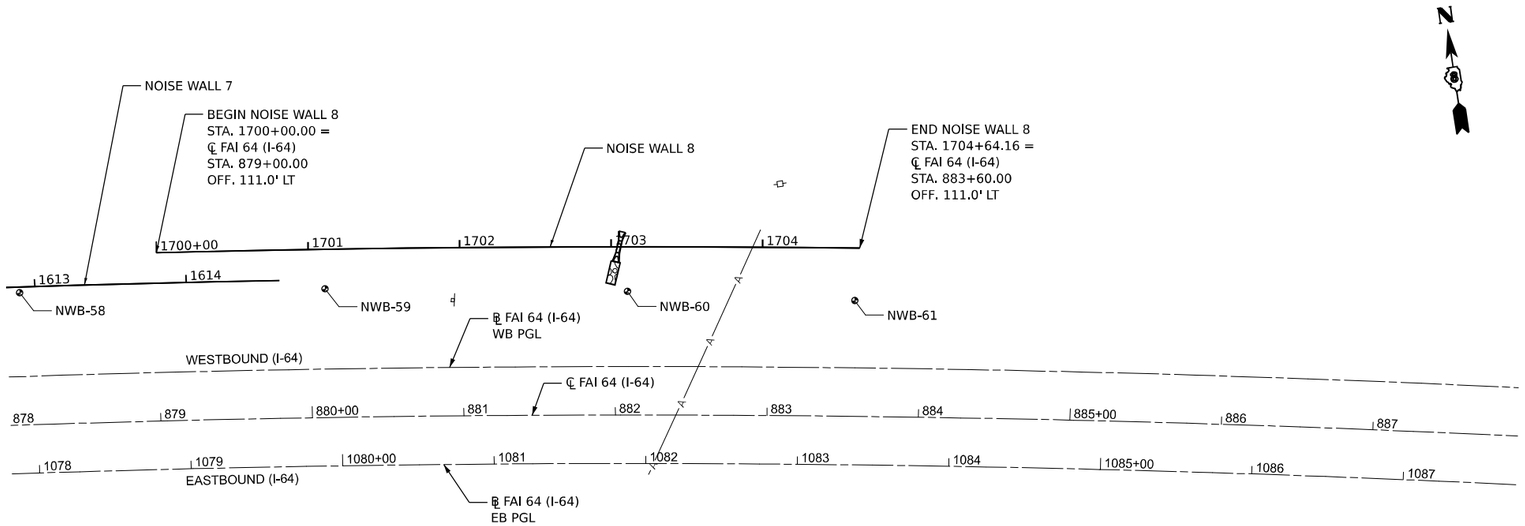

LEGEND

NOISE WALL SOIL BORINGS

0 50 100 150
SCALE IN FEET

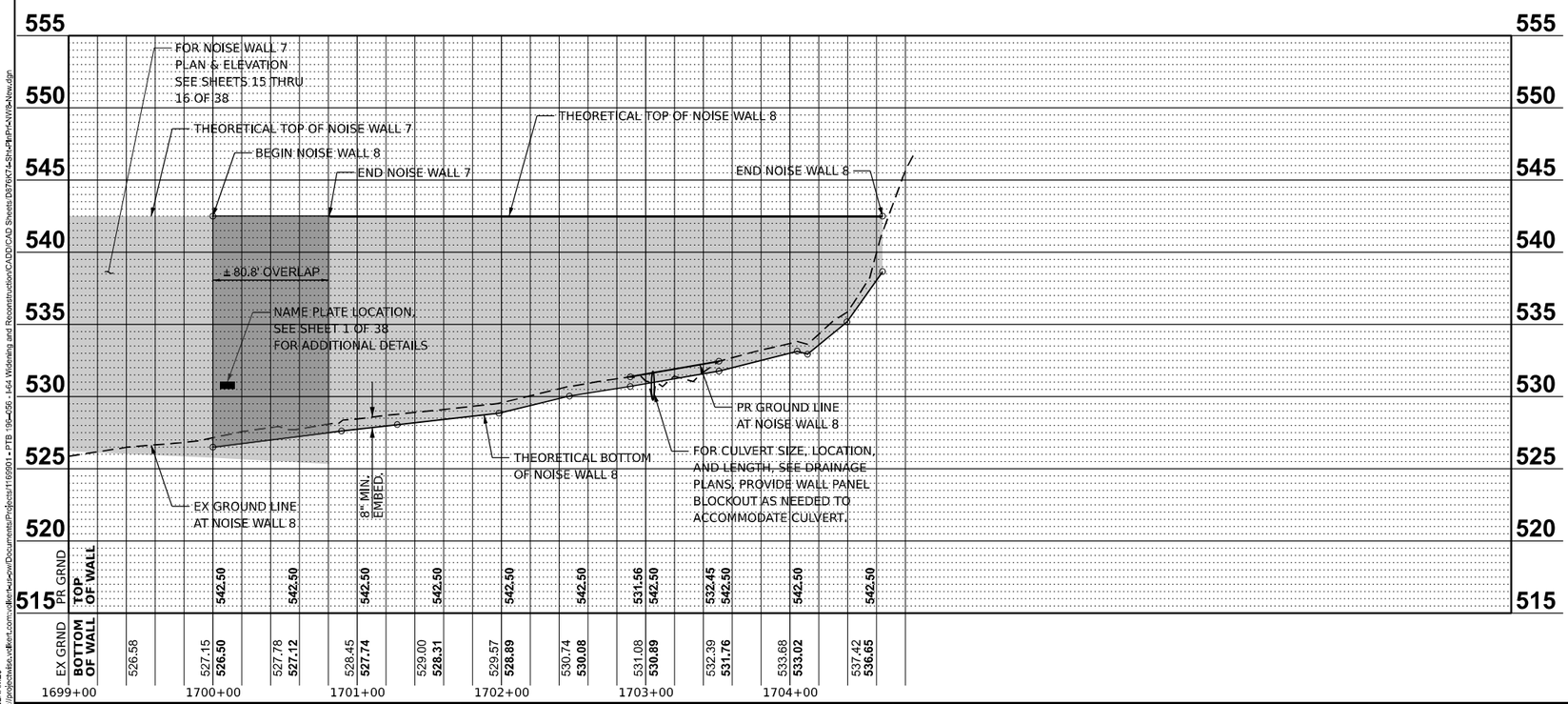

NOISE ABATEMENT WALL
BUILT (YEAR) BY
STATE OF ILLINOIS
FAI 64
SECTION 82-7WRS-2
FROM STA. (879+00) TO STA. (883+60)
STRUCTURE NO. 082-N6459

NAME PLATE
SEE STD. 515001

GENERAL PLAN & ELEVATION
NOISE ABATEMENT WALL
F.A.I. RTE. 64
SECTION 82-7WRS-2
ST. CLAIR COUNTY
STA. 879+00.00
TO STA 883+60.00

MODEL: $MODELNAME$
FILE NAME: pw://projectwise.volkert.com:office-hub-pw/Documents/Projects/1165901 • PTB 195-056, I-64 Widening and Reconstruction\CADD\CAD Sheets\D876K74-Sht-Pln-Pln-AWB-New.dgn

VOLKERT

USER NAME =	DESIGNED - SJN	REVISED -
	DRAWN - MAM	REVISED -
PLOT SCALE = 0.16666633 ' / in.	CHECKED - JLS	REVISED -
PLOT DATE = 5/2/2024	DATE - 9-10-24	REVISED -

STATE OF ILLINOIS
DEPARTMENT OF TRANSPORTATION

PLAN & ELEVATION - NOISE WALL 8
I-64 WIDENING AND RECONSTRUCTION

SCALE: 1"=50' | SHEET 17 OF 38 SHEETS | STA. 1699+00 TO STA. 1704+64.16

F.A.I. RTE.	SECTION	COUNTY	TOTAL SHEETS	SHEET NO.
64	82-7HB-1	ST. CLAIR	691	436
		CONTRACT NO. 76K74		
		ILLINOIS FED. AID PROJECT		

Illinois Department of Transportation
Division of Highways

SOIL BORING LOG

Page 1 of 1

Date 12/20/22

ROUTE F.A.I. RTE. 64 DESCRIPTION I-64 from West of Green Mount Rd to West of IL 158 LOGGED BY KEG

SECTION 87-7WRS-2 LOCATION

COUNTY St. Clair DRILLING METHOD AUTO HAMMER TYPE HSA 2 1/4"

STRUCT. NO.
Station

BORING NO. NWB-06
Station 14+00.00
Offset 39.0 ft RT
Ground Surface Elev. 543.01 ft

Surface Water Elev. ft
Stream Bed Elev. ft

Groundwater Elev.:
First Encounter ft
Upon Completion ft
After Hrs. ft

Description	Elev.	DEPTH (ft)	BLOWS (/6")	UCS Qu (tsf)	MOIST (%)
SILTY CLAY - Brown and gray, med-stiff, w/ some organics			1		
			2	0.3	28
			2	B	
LL = 36, PL = 22, PI = 14			1		
			2	0.9	26
		-5	2	B	
			2		
			2	0.1	27
			2	B	
			2		
			2	1.3	28
		-10	2	B	
becomes wet			2		
			1	1.6	23
			2	B	
			WH		
			1	0.6	23
	528.0	-15	2	S	
SANDY CLAY - Brown, med-stiff			WH		
			WH	1.1	23
	525.5		1	B	
SANDY GRAVEL - Brown, very soft Poor Recovery			WH		
			1	0.5	-
		-20	1	P	

Description	Elev.	DEPTH (ft)	BLOWS (/6")	UCS Qu (tsf)	MOIST (%)
SANDY GRAVEL - Brown, very soft Poor Recovery *(continued)*					
			WH		
			2	0.0	28
	520.5		1	P	
End of Boring					
		-25			
		-30			
		-35			
		-40			

The Unconfined Compressive Strength (UCS) Failure Mode is indicated by (B-Bulge, S-Shear, P-Penetrometer)
The SPT (N value) is the sum of the last two blow values in each sampling zone (AASHTO T206)

BBS, form 137 (Rev. 8-99)

Illinois Department of Transportation
Division of Highways

SOIL BORING LOG

Page 1 of 1

Date 12/6/22

ROUTE F.A.I. RTE. 64 DESCRIPTION I-64 from West of Green Mount Rd to West of IL 158 LOGGED BY KEG

SECTION 87-7WRS-2 LOCATION

COUNTY St. Clair DRILLING METHOD AUTO HAMMER TYPE HSA 2 1/4"

STRUCT. NO.
Station

BORING NO. NWB-07
Station 10+00.00
Offset 27.0 ft RT
Ground Surface Elev. 538.76 ft

Surface Water Elev. ft
Stream Bed Elev. ft

Groundwater Elev.:
First Encounter ft
Upon Completion ft
After Hrs. ft

Description	Elev.	DEPTH (ft)	BLOWS (/6")	UCS Qu (tsf)	MOIST (%)
TOPSOIL - 1"	538.7				
SILTY CLAY - Brown, med-stiff			1		
			3	1.0	24
			5	B	
become gray, w/ some organics			2		
			2	0.5	25
	533.8	-5	3	B	
SILT - Gray, med-stiff Gravel - 0.0%, Sand - 1.1%, Fines - 98.9%			1		
			2	0.5	26
	531.3		5	S	
SILTY CLAY - Gray, med-stiff			1		
			1	1.3	26
		-10	2	B	
			WH		
			2	0.8	28
	526.3		1	B	
CLAY - Dark gray, med-stiff, w/ pebbles and gravel			WH		
			1	0.7	29
		-15	2	B	
			WH		
			1	0.6	24
	518.8	-20	1	B	

Description	Elev.	DEPTH (ft)	BLOWS (/6")	UCS Qu (tsf)	MOIST (%)
GRAVELLY SAND - Gray, med-dense, w/ some clay, wet			3		
			5		14
	516.3		6		
End of Boring					
		-25			
		-30			
		-35			
		-40			

The Unconfined Compressive Strength (UCS) Failure Mode is indicated by (B-Bulge, S-Shear, P-Penetrometer)
The SPT (N value) is the sum of the last two blow values in each sampling zone (AASHTO T206)

BBS, form 137 (Rev. 8-99)

Illinois Department of Transportation
Division of Highways

SOIL BORING LOG

Page 1 of 1

Date 12/6/22

ROUTE F.A.I. RTE. 64 DESCRIPTION I-64 from West of Green Mount Rd to West of IL 158 LOGGED BY KEG

SECTION 87-7WRS-2 LOCATION

COUNTY St. Clair DRILLING METHOD AUTO HAMMER TYPE HSA 2 1/4"

STRUCT. NO.
Station

BORING NO. NWB-08
Station 8+00.00
Offset 27.0 ft RT
Ground Surface Elev. 540.91 ft

Surface Water Elev. ft
Stream Bed Elev. ft

Groundwater Elev.:
First Encounter ft
Upon Completion ft
After Hrs. ft

Description	Elev.	DEPTH (ft)	BLOWS (/6")	UCS Qu (tsf)	MOIST (%)
TOPSOIL - 2"	540.7				
CLAYEY SILT - Brown, med-stiff			1		
			1	1.3	24
			3	P	
	537.4				
SILTY CLAY - Gray, med-stiff			1		
			2	0.5	22
	535.9	-5	4	B	
CLAYEY SILT - Gray, med-stiff, w/ some organics			1		
			2	0.7	23
			3	B	
LL = 38, PL = 24, PI = 14			1		
			1	0.8	29
		-10	2	B	
becomes gray and brown, med-stiff			WH		
			1	0.4	28
			2	B	
			1		
			2	0.7	26
	525.9	-15	3	B	
CLAY - Dark gray, med-stiff			1		
			1	-	-
			2		
			1		
			1	0.7	30
	520.9	-20	2	B	
End of Boring					

The Unconfined Compressive Strength (UCS) Failure Mode is indicated by (B-Bulge, S-Shear, P-Penetrometer)
The SPT (N value) is the sum of the last two blow values in each sampling zone (AASHTO T206)

BBS, form 137 (Rev. 8-99)

MODEL: $MODELNAME$
FILE NAME: pw://projectwise.volkert.com:..dms-eu-pw/Documents/Projects/165901 - PTB 195-056 - I-64 Widening and Reconstruction/CADD/CAD Sheets/D876K74-SHA-Noise Wall-Soil Borings.dgn

VOLKERT

USER NAME =	DESIGNED - SJN	REVISED -
	DRAWN - MAM	REVISED -
PLOT SCALE = 0.16666633 ' / in.	CHECKED - JLS	REVISED -
PLOT DATE = 5/2/2024	DATE - 9-10-24	REVISED -

STATE OF ILLINOIS
DEPARTMENT OF TRANSPORTATION

SOIL BORING LOGS - NOISE WALL 2
I-64 WIDENING AND RECONSTRUCTION

SCALE: N/A | SHEET 18 OF 38 SHEETS | STA. N/A | TO STA. N/A

F.A.I. RTE.	SECTION	COUNTY	TOTAL SHEETS	SHEET NO.
64	82-7HB-1	ST. CLAIR	691	437
		CONTRACT NO. 76K74		
	ILLINOIS	FED. AID PROJECT		

Illinois Department of Transportation
Division of Highways

SOIL BORING LOG

Page 1 of 1

Date 12/5/22

ROUTE F.A.I. RTE. 64 DESCRIPTION I-64 from West of Green Mount Rd to West of IL 158 LOGGED BY KEG

SECTION 87-7WRS-2 LOCATION

COUNTY St. Clair DRILLING METHOD AUTO HAMMER TYPE HSA 2 1/4"

STRUCT. NO.
Station

BORING NO. NWB-09
Station 6+00.00
Offset 27.0 ft RT
Ground Surface Elev. 542.90 ft

Surface Water Elev. ft
Stream Bed Elev. ft

Groundwater Elev.:
First Encounter ft
Upon Completion ft
After Hrs. ft

Description	Elev.	DEPTH (ft)	BLOWS (/6")	UCS Qu (tsf)	MOIST (%)
TOPSOIL - 2"	542.7				
CLAYEY SILT - Brown, med-stiff			WH		
			1 4	0.6 B	22
becomes gray			1		
			3 5	1.7 B	25
w/ some organics			1		
	535.4		2 5	1.8 B	21
CLAY - Dark gray, med-stiff			2		
			2 3	1.2 B	28
become moist			WH		
	530.4		WH 2	0.7 B	30
SILTY CLAY - Gray and brown, med-stiff, wet			WH		
			1 2	0.7 B	27
becomes soft			WH		
			WH 2	0.2 B	24
becomes stiff			1		
	522.9		2 3	1.6 B	25

End of Boring

The Unconfined Compressive Strength (UCS) Failure Mode is indicated by (B-Bulge, S-Shear, P-Penetrometer)
The SPT (N value) is the sum of the last two blow values in each sampling zone (AASHTO T206)

BBS, form 137 (Rev. 8-99)

Illinois Department of Transportation
Division of Highways

SOIL BORING LOG

Page 1 of 1

Date 12/5/22

ROUTE F.A.I. RTE. 64 DESCRIPTION I-64 from West of Green Mount Rd to West of IL 158 LOGGED BY KEG

SECTION 87-7WRS-2 LOCATION

COUNTY St. Clair DRILLING METHOD AUTO HAMMER TYPE HSA 2 1/4"

STRUCT. NO.
Station

BORING NO. NWB-10
Station 4+00.00
Offset 27.8 ft RT
Ground Surface Elev. 544.09 ft

Surface Water Elev. ft
Stream Bed Elev. ft

Groundwater Elev.:
First Encounter ft
Upon Completion ft
After Hrs. ft

Description	Elev.	DEPTH (ft)	BLOWS (/6")	UCS Qu (tsf)	MOIST (%)
TOPSOIL - 2"	543.9				
CLAYEY SILT - Brown, med-stiff, w/ some organics			1		
			1 6	1.8 B	20
becomes brown and gray			1		
			2 3	1.3 B	28
becomes gray and brown, soft and moist LL = 34, PL = 25, PI = 11			WH		
			1 2	0.4 B	28
becomes med-stiff			1		
			1 2	1.0 B	33
			1		
	531.6		1 2	0.7 B	27
SILTY CLAY - Gray and brown, soft, wet			1		
			1 2	0.5 B	27
			1		
	526.6		1 2	0.5 B	21
CLAY - Gray, soft			WH		
			WH 1	0.6 B	31
CLAY - Gray, soft *(continued)* becomes med-stiff			1		
			2 3	1.2 B	27
	521.6				
End of Boring					

The Unconfined Compressive Strength (UCS) Failure Mode is indicated by (B-Bulge, S-Shear, P-Penetrometer)
The SPT (N value) is the sum of the last two blow values in each sampling zone (AASHTO T206)

BBS, form 137 (Rev. 8-99)

Illinois Department of Transportation
Division of Highways

SOIL BORING LOG

Page 1 of 1

Date 12/5/22

ROUTE F.A.I. RTE. 64 DESCRIPTION I-64 from West of Green Mount Rd to West of IL 158 LOGGED BY KEG

SECTION 87-7WRS-2 LOCATION

COUNTY St. Clair DRILLING METHOD AUTO HAMMER TYPE HSA 2 1/4"

STRUCT. NO.
Station

BORING NO. NWB-11
Station 2+00.00
Offset 31.1 ft RT
Ground Surface Elev. 546.55 ft

Surface Water Elev. ft
Stream Bed Elev. ft

Groundwater Elev.:
First Encounter ft
Upon Completion ft
After Hrs. ft

Description	Elev.	DEPTH (ft)	BLOWS (/6")	UCS Qu (tsf)	MOIST (%)
TOPSOIL - 3"	546.3				
SILTY CLAY - Brown, med-stiff, w/ some organics			3		
			5 6	3.5 P	19
becomes gray and brown, w/ some organics			1		
			2 3	1.4 B	18
no more organics			1		
			1 1	0.7 B	31
becomes soft			1		
			1 2	0.3 B	27
becomes brown and gray, med-stiff			1		
			1 2	0.6 B	27
becomes wet			WH		
			1 1	0.4 B	28
			1		
	529.0		1 4	1.0 B	24
SILTY CLAY - Gray, med-stiff, moist, w/ some sand			WH		
	526.5		1 2	0.9 B	27

End of Boring

The Unconfined Compressive Strength (UCS) Failure Mode is indicated by (B-Bulge, S-Shear, P-Penetrometer)
The SPT (N value) is the sum of the last two blow values in each sampling zone (AASHTO T206)

BBS, form 137 (Rev. 8-99)

MODEL: $MODELNAME$
FILE NAME: pw://projectwise.volkert.com:..dms-eu-pw/Documents/Projects/165901 - PTB 195-056 - I-64 Widening and Reconstruction/CADD/CAD Sheets/D876K74-SHN-Noise Wall-Soil Borings.dgn

VOLKERT

USER NAME =	DESIGNED - SJN	REVISED -	
	DRAWN - MAM	REVISED -	
PLOT SCALE = 0.16666633 ' / in.	CHECKED - JLS	REVISED -	
PLOT DATE = 5/2/2024	DATE - 9-10-24	REVISED -	

STATE OF ILLINOIS
DEPARTMENT OF TRANSPORTATION

SOIL BORING LOGS - NOISE WALL 2
I-64 WIDENING AND RECONSTRUCTION

SCALE: N/A | SHEET 19 OF 38 SHEETS | STA. N/A | TO STA. N/A

F.A.I. RTE.	SECTION	COUNTY	TOTAL SHEETS	SHEET NO.
64	82-7HB-1	ST. CLAIR	691	438
		CONTRACT NO. 76K74		
	ILLINOIS	FED. AID PROJECT		

Illinois Department of Transportation
Division of Highways

SOIL BORING LOG

Page 1 of 1

Date 12/5/22

ROUTE F.A.I. RTE. 64 DESCRIPTION I-64 from West of Green Mount Rd to West of IL 158 LOGGED BY KEG

SECTION 87-7WRS-2 LOCATION

COUNTY St. Clair DRILLING METHOD AUTO HAMMER TYPE HSA 2 1/4"

STRUCT. NO.
Station

BORING NO. NWB-12
Station 782+34.14
Offset 91.4 ft LT
Ground Surface Elev. 551.89 ft

Surface Water Elev. ft
Stream Bed Elev. ft

Groundwater Elev.:
First Encounter ft
Upon Completion ft
After Hrs. ft

Description	Elev.	DEPTH (ft)	BLOWS (/6")	UCS Qu (tsf)	MOIST (%)
TOPSOIL - 2.5"	551.7				
CLAYEY SILT - Brown, stiff, w/ some organics			3		
			4	2.0	22
			4	S	
becomes dark brown LL = 54, PL = 25, PI = 29			2		
			3	1.4	27
		-5	3	B	
	545.4		1		
SILTY CLAY - Brown and gray, med-stiff, w/ lignite stains			2	0.5	30
			2	B	
	543.4		1		
CLAYEY SILT - Gray and brown, med-stiff			1	0.3	27
		-10	1	B	
			2		
			3	1.2	25
			3	B	
becomes moist			2		
			1	0.6	26
		-15	3	B	
becomes soft			WH		
			WH	0.4	28
			1	B	
becomes wet			1		
			2	0.5	30
	531.9	-20	3	B	

End of Boring

The Unconfined Compressive Strength (UCS) Failure Mode is indicated by (B-Bulge, S-Shear, P-Penetrometer)
The SPT (N value) is the sum of the last two blow values in each sampling zone (AASHTO T206)

BBS, form 137 (Rev. 8-99)

Illinois Department of Transportation
Division of Highways

SOIL BORING LOG

Page 1 of 1

Date 12/5/22

ROUTE F.A.I. RTE. 64 DESCRIPTION I-64 from West of Green Mount Rd to West of IL 158 LOGGED BY KEG

SECTION 87-7WRS-2 LOCATION

COUNTY St. Clair DRILLING METHOD AUTO HAMMER TYPE HSA 2 1/4"

STRUCT. NO.
Station

BORING NO. NWB-13
Station 784+00.00
Offset 91.0 ft LT
Ground Surface Elev. 553.70 ft

Surface Water Elev. ft
Stream Bed Elev. ft

Groundwater Elev.:
First Encounter ft
Upon Completion ft
After Hrs. ft

Description	Elev.	DEPTH (ft)	BLOWS (/6")	UCS Qu (tsf)	MOIST (%)	DEPTH (ft)	BLOWS (/6")	UCS Qu (tsf)	MOIST (%)
TOPSOIL - 2.5"	553.5								
CLAYEY SILT - Brown, med-stiff, w/ some organics			4				1		
			6	3.0	18		2	0.5	23
	551.2		7	P			2	B	
SILTY CLAY - Dark brown, med-stiff			2						
			2	0.5	27				
		-5	2	B		-25			
becomes gray and brown, w/ lignite stains			2						
			2	1.0	29				
	546.2		4	B					
CLAYEY SILT - Gray and brown, soft to med-stiff			0						
			1	0.3	26				
		-10	2	B		-30			
			1						
			2	0.9	26				
			4	B					
			1						
			1	0.5	26				
		-15	2	B		-35			
becomes brown			1						
			2	0.4	26				
			1	B					
becomes gray and brown, moist, w/ some gravel			1						
			1	0.5	25				
	533.7	-20	1	B		-40			

End of Boring

The Unconfined Compressive Strength (UCS) Failure Mode is indicated by (B-Bulge, S-Shear, P-Penetrometer)
The SPT (N value) is the sum of the last two blow values in each sampling zone (AASHTO T206)

BBS, form 137 (Rev. 8-99)

Illinois Department of Transportation
Division of Highways

SOIL BORING LOG

Page 1 of 1

Date 12/2/22

ROUTE F.A.I. RTE. 64 DESCRIPTION I-64 from West of Green Mount Rd to West of IL 158 LOGGED BY KEG

SECTION 87-7WRS-2 LOCATION

COUNTY St. Clair DRILLING METHOD AUTO HAMMER TYPE HSA 2 1/4"

STRUCT. NO.
Station

BORING NO. NWB-14
Station 786+00.00
Offset 91.0 ft LT
Ground Surface Elev. 556.16 ft

Surface Water Elev. ft
Stream Bed Elev. ft

Groundwater Elev.:
First Encounter ft
Upon Completion ft
After Hrs. ft

Description	Elev.	DEPTH (ft)	BLOWS (/6")	UCS Qu (tsf)	MOIST (%)
TOPSOIL - 4"	555.8				
CLAYEY SILT - Brown, med-stiff			3		
			4	1.1	21
			3	B	
			2		
			1	1.0	26
		-5	2	B	
becomes gray and brown			1		
			1	0.7	28
			2	B	
	547.7		1		
SILTY CLAY - Gray and brown, med-stiff LL = 38, PL = 26, PI = 12			1	0.4	29
		-10	2	B	
	545.2		1		
CLAYEY SILT - Gray and brown, med-stiff			3	1.4	8
			3	B	
			1		
			1	1.0	26
		-15	2	B	
becomes soft to med-stiff			1		
			1	0.8	27
			2	B	
becomes brown and moist			1		
			2	0.8	27
	536.2	-20	2	B	

End of Boring

The Unconfined Compressive Strength (UCS) Failure Mode is indicated by (B-Bulge, S-Shear, P-Penetrometer)
The SPT (N value) is the sum of the last two blow values in each sampling zone (AASHTO T206)

BBS, form 137 (Rev. 8-99)

MODEL: $MODELNAME$
FILE NAME: pw://projectwise.volkert.com:..dms-eu-pw/Documents/Projects/116901 - PTB 195-056 - I-64 Widening and Reconstruction/CADD/CAD Sheets/D876K74-SHA-Noise Wall-Soil Borings.dgn

VOLKERT

USER NAME =	DESIGNED - SJN	REVISED -	
	DRAWN - MAM	REVISED -	
PLOT SCALE = 0.16666633 ' / in.	CHECKED - JLS	REVISED -	
PLOT DATE = 5/2/2024	DATE - 9-10-24	REVISED -	

STATE OF ILLINOIS
DEPARTMENT OF TRANSPORTATION

SOIL BORING LOGS - NOISE WALL 2
I-64 WIDENING AND RECONSTRUCTION

SCALE: N/A | SHEET 20 OF 38 SHEETS | STA. N/A | TO STA. N/A

F.A.I. RTE.	SECTION	COUNTY	TOTAL SHEETS	SHEET NO.
64	82-7HB-1	ST. CLAIR	691	439
		CONTRACT NO. 76K74		
		ILLINOIS	FED. AID PROJECT	

Illinois Department of Transportation
Division of Highways

SOIL BORING LOG

Page 1 of 1

Date 12/2/22

ROUTE F.A.I. RTE. 64 DESCRIPTION I-64 from West of Green Mount Rd to West of IL 158 LOGGED BY KEG

SECTION 87-7WRS-2 LOCATION

COUNTY St. Clair DRILLING METHOD AUTO HAMMER TYPE HSA 2 1/4"

STRUCT. NO.
Station

BORING NO. NWB-15
Station 788+00.00
Offset 91.0 ft LT
Ground Surface Elev. 558.03 ft

Surface Water Elev. ft
Stream Bed Elev. ft

Groundwater Elev.:
First Encounter ft
Upon Completion ft
After Hrs. ft

Description	Elev.	DEPTH (ft)	BLOWS (/6")	UCS Qu (tsf)	MOIST (%)
TOPSOIL - 2"	557.9				
SILTY CLAY - Brown, med-stiff, w/ some organics			1		
			1 2	1.1 B	30
CLAYEY SILT - Brown and gray, med-stiff	554.5		WH		
			1 1	0.7 B	28
		5			
			1		
			1 2	0.5 B	29
becomes soft			1		
			1 2	0.1 B	28
		10			
becomes brown, soft to med-stiff Gravel - 0.0%, Sand - 1.3%, Fines - 98.7%			1		
			1 1	0.7 B	27
		15			
			1		
			1 2	0.7 B	27
SILTY CLAY - Brown, soft to med-stiff, w/ some sand	539.5		WH		
			1 1	0.4 B	27
		20			
SILTY CLAY - Brown, soft to med-stiff, w/ some sand *(continued)* w/ some sand and gravel					
			WH		
			1 2	0.5 B	23
End of Boring	535.5				
		25			
		30			
		35			
		40			

The Unconfined Compressive Strength (UCS) Failure Mode is indicated by (B-Bulge, S-Shear, P-Penetrometer)
The SPT (N value) is the sum of the last two blow values in each sampling zone (AASHTO T206)

BBS, form 137 (Rev. 8-99)

Illinois Department of Transportation
Division of Highways

SOIL BORING LOG

Page 1 of 1

Date 12/2/22

ROUTE F.A.I. RTE. 64 DESCRIPTION I-64 from West of Green Mount Rd to West of IL 158 LOGGED BY KEG

SECTION 87-7WRS-2 LOCATION

COUNTY St. Clair DRILLING METHOD AUTO HAMMER TYPE HSA 2 1/4"

STRUCT. NO.
Station

BORING NO. NWB-16
Station 790+00.00
Offset 91.0 ft LT
Ground Surface Elev. 560.53 ft

Surface Water Elev. ft
Stream Bed Elev. ft

Groundwater Elev.:
First Encounter ft
Upon Completion ft
After Hrs. ft

Description	Elev.	DEPTH (ft)	BLOWS (/6")	UCS Qu (tsf)	MOIST (%)
TOPSOIL - 3"	560.3				
CLAYEY SILT - Brown, med-stiff			WH		
			1 2	0.7 B	29
becomes soft			1		
			1 1	0.1 B	28
		5			
becomes med-stiff			WH		
			2 2	1.2 B	23
			WH		
			1 1	0.6 B	26
		10			
			1		
			1 2	0.4 B	27
SILTY CLAY - Brown, med-stiff	547.0		WH		
			1 1	0.5 B	28
		15			
w/ some sand			1		
			1 2	1.3 B	22
SANDY CLAY - Gray, med-stiff, w/ some gravel	542.0		1		
			1 2	0.3 B	21
End of Boring	540.5	20			

The Unconfined Compressive Strength (UCS) Failure Mode is indicated by (B-Bulge, S-Shear, P-Penetrometer)
The SPT (N value) is the sum of the last two blow values in each sampling zone (AASHTO T206)

BBS, form 137 (Rev. 8-99)

Illinois Department of Transportation
Division of Highways

SOIL BORING LOG

Page 1 of 1

Date 12/2/22

ROUTE F.A.I. RTE. 64 DESCRIPTION I-64 from West of Green Mount Rd to West of IL 158 LOGGED BY KEG

SECTION 87-7WRS-2 LOCATION

COUNTY St. Clair DRILLING METHOD AUTO HAMMER TYPE HSA 2 1/4"

STRUCT. NO.
Station

BORING NO. NWB-17
Station 792+00.00
Offset 91.0 ft LT
Ground Surface Elev. 563.75 ft

Surface Water Elev. ft
Stream Bed Elev. ft

Groundwater Elev.:
First Encounter ft
Upon Completion ft
After Hrs. ft

Description	Elev.	DEPTH (ft)	BLOWS (/6")	UCS Qu (tsf)	MOIST (%)
TOPSOIL - 3"	563.5				
CLAYEY SILT - Brown, soft, w/ some organics			0		
			1 1	0.1 B	27
LL = 34, PL = 22, PI = 12			1		
			1 2	0.4 B	25
		5			
becomes med-stiff			WH		
			1 2	0.5 B	26
			1		
			2 2	0.3 B	25
		10			
			WH		
			WH 2	0.5 B	21
SILTY CLAY - Brown, med-stiff	551.8				
w/ some sand			1		
			1 1	0.7 B	22
		15			
SANDY CLAY - Brown, med-stiff Gravel - 0.4%, Sand - 64.4%, Fines - 35.2%	547.8		WH		
	546.8		3 1	0.4 B	24
CLAYEY SAND - Brown and black, med-dense, med-coarse	545.3				
SAND - Brown, med-dense, well graded, moist			1		
			1 2	-	25
End of Boring	543.8	20			

The Unconfined Compressive Strength (UCS) Failure Mode is indicated by (B-Bulge, S-Shear, P-Penetrometer)
The SPT (N value) is the sum of the last two blow values in each sampling zone (AASHTO T206)

BBS, form 137 (Rev. 8-99)

MODEL: $MODELNAME$
FILE NAME: pw://projectwise.volkert.com:..dfiles-eu-pw\Documents\Projects\116901 - PTB 195-056 - I-64 Widening and Reconstruction\CADD\CAD Sheets\D876K74-SHA-Notes Wall-Soil Borings.dgn

VOLKERT

USER NAME =	DESIGNED - SJN	REVISED -	
	DRAWN - MAM	REVISED -	
PLOT SCALE = 0.16666633 ' / in.	CHECKED - JLS	REVISED -	
PLOT DATE = 5/2/2024	DATE - 9-10-24	REVISED -	

STATE OF ILLINOIS
DEPARTMENT OF TRANSPORTATION

SOIL BORING LOGS - NOISE WALL 2
I-64 WIDENING AND RECONSTRUCTION

SCALE: N/A | SHEET 21 OF 38 SHEETS | STA. N/A | TO STA. N/A

F.A.I. RTE.	SECTION	COUNTY	TOTAL SHEETS	SHEET NO.
64	82-7HB-1	ST. CLAIR	691	440
		CONTRACT NO. 76K74		
		ILLINOIS	FED. AID PROJECT	

Illinois Department of Transportation
Division of Highways

SOIL BORING LOG

Page 1 of 1

Date 12/1/22

ROUTE F.A.I. RTE. 64 DESCRIPTION I-64 from West of Green Mount Rd to West of IL 158 LOGGED BY KEG

SECTION 87-7WRS-2 LOCATION

COUNTY St. Clair DRILLING METHOD AUTO HAMMER TYPE HSA 2 1/4"

STRUCT. NO.
Station

BORING NO. NWB-18
Station 794+00.00
Offset 91.0 ft LT
Ground Surface Elev. 565.28 ft

Surface Water Elev. ft
Stream Bed Elev. ft

Groundwater Elev.:
First Encounter 541.8 ft ▼
Upon Completion ft
After Hrs. ft

Description	Elev.	DEPTH (ft)	BLOWS (/6")	UCS Qu (tsf)	MOIST (%)
TOPSOIL - 3"	565.0				
CLAYEY SILT - Brown, soft			3		
			4	0.1	23
			2	B	
Poor Recovery			WH		
			0	-	24
		-5	1		
			WH		
			1	0.3	25
			2	B	
becomes med-stiff			1		
			1	0.4	26
		-10	2	B	
			WH		
			2	0.7	25
			1	B	
SILTY CLAY - Brown, med-stiff	551.8		WH		
			1	0.5	19
		-15	2	B	
becomes moist	548.8		WH		
SANDY CLAY - Brown, moist, med-stiff			1	0.8	26
			2	B	
CLAYEY SAND - Brown, med-coarse, med-dense, moist	546.8		WH		
			1	-	20
		-20	1		

Description	Elev.	DEPTH (ft)	BLOWS (/6")	UCS Qu (tsf)	MOIST (%)
CLAYEY SAND - Brown, med-coarse, med-dense, moist *(continued)*			1		
			1	-	29
			1		
CLAYEY SILT - Brown, soft, moist	543.3				
	541.8 ▼		1		
SAND - Brown, med-coarse, med-dense, wet Gravel - 5.8%, Sand - 76.9%, Fines - 17.3%	540.3		2	-	24
		-25	2		
End of Boring					
		-30			
		-35			
		-40			

The Unconfined Compressive Strength (UCS) Failure Mode is indicated by (B-Bulge, S-Shear, P-Penetrometer)
The SPT (N value) is the sum of the last two blow values in each sampling zone (AASHTO T206)

BBS, form 137 (Rev. 8-99)

Illinois Department of Transportation
Division of Highways

SOIL BORING LOG

Page 1 of 1

Date 12/1/22

ROUTE F.A.I. RTE. 64 DESCRIPTION I-64 from West of Green Mount Rd to West of IL 158 LOGGED BY KEG

SECTION 87-7WRS-2 LOCATION

COUNTY St. Clair DRILLING METHOD AUTO HAMMER TYPE HSA 2 1/4"

STRUCT. NO.
Station

BORING NO. NWB-19
Station 796+00.00
Offset 91.0 ft LT
Ground Surface Elev. 565.20 ft

Surface Water Elev. ft
Stream Bed Elev. ft

Groundwater Elev.:
First Encounter ft
Upon Completion ft
After Hrs. ft

Description	Elev.	DEPTH (ft)	BLOWS (/6")	UCS Qu (tsf)	MOIST (%)
TOPSOIL - 3"	564.9				
CLAYEY SILT - Brown, med-stiff, w/ some organics			1		
			1	0.4	20
			5	B	
becomes brown and gray			3		
			5	2.5	19
		-5	8	P	
becomes gray			3		
			4	1.2	19
			6	B	
becomes dark gray			2		
			2	1.4	26
		-10	6	B	
	554.2		2		
CLAY - Dark gray, med-stiff			2	1.3	25
			3	B	
becomes gray and brown			1		
			1	0.4	27
		-15	2	B	
	549.2		WH		
SILTY CLAY - Brown and gray, soft			WH	0.7	26
			2	B	
w/ lignite stains			1		
			1	0.7	30
	545.2	-20	4	B	
End of Boring					

Description	Elev.	DEPTH (ft)	BLOWS (/6")	UCS Qu (tsf)	MOIST (%)
		-25			
		-30			
		-35			
		-40			

The Unconfined Compressive Strength (UCS) Failure Mode is indicated by (B-Bulge, S-Shear, P-Penetrometer)
The SPT (N value) is the sum of the last two blow values in each sampling zone (AASHTO T206)

BBS, form 137 (Rev. 8-99)

Illinois Department of Transportation
Division of Highways

SOIL BORING LOG

Page 1 of 1

Date 12/1/22

ROUTE F.A.I. RTE. 64 DESCRIPTION I-64 from West of Green Mount Rd to West of IL 158 LOGGED BY KEG

SECTION 87-7WRS-2 LOCATION

COUNTY St. Clair DRILLING METHOD AUTO HAMMER TYPE HSA 2 1/4"

STRUCT. NO.
Station

BORING NO. NWB-20
Station 798+00.00
Offset 91.0 ft LT
Ground Surface Elev. 567.68 ft

Surface Water Elev. ft
Stream Bed Elev. ft

Groundwater Elev.:
First Encounter ft
Upon Completion ft
After Hrs. ft

Description	Elev.	DEPTH (ft)	BLOWS (/6")	UCS Qu (tsf)	MOIST (%)
TOPSOIL - 3"	567.4				
CLAYEY SILT - Brown, med-stiff, w/ some organics			1		
			2	0.7	24
			4	B	
	564.2				
SILTY CLAY - Brown and gray, stiff			3		
			7	3.3	24
		-5	8	S	
LL = 43, PL = 23, PI = 20			3		
			4	1.7	22
			7	B	
	559.2				
CLAYEY SILT - Dark gray, med-stiff, w/ some organics			3		
			6	1.5	24
		-10	4	B	
	556.7				
CLAY - Gray, med-stiff			1		
			2	1.5	30
			4	B	
becomes soft			1		
			1	0.3	27
		-15	2	B	
	551.7				
CLAYEY SILT - Gray and brown, soft, w/ lignite stains, moist			1		
			2	0.3	29
			3	B	
			2		
			1	0.1	27
	547.7	-20	3	B	
End of Boring					

Description	Elev.	DEPTH (ft)	BLOWS (/6")	UCS Qu (tsf)	MOIST (%)
		-25			
		-30			
		-35			
		-40			

The Unconfined Compressive Strength (UCS) Failure Mode is indicated by (B-Bulge, S-Shear, P-Penetrometer)
The SPT (N value) is the sum of the last two blow values in each sampling zone (AASHTO T206)

BBS, form 137 (Rev. 8-99)

MODEL: $MODELNAME$
FILE NAME: pw://projectwise.volkert.com:volkert-us-pw/Documents/Projects/116990 - PTB 195-4/56 - I-64 Widening and Reconstruction/CADD/CAD Sheets/D576K74-SH-Noise Walls-Soil Borings.dgn

VOLKERT

USER NAME =	DESIGNED - SJN	REVISED -	
	DRAWN - MAM	REVISED -	
PLOT SCALE = 0.16666633 ' / in.	CHECKED - JLS	REVISED -	
PLOT DATE = 5/2/2024	DATE - 9-10-24	REVISED -	

STATE OF ILLINOIS
DEPARTMENT OF TRANSPORTATION

SOIL BORING LOGS - NOISE WALL 2
I-64 WIDENING AND RECONSTRUCTION

SCALE: N/A | SHEET 22 OF 38 SHEETS | STA. N/A | TO STA. N/A

F.A.I. RTE.	SECTION	COUNTY	TOTAL SHEETS	SHEET NO.
64	82-7HB-1	ST. CLAIR	691	441
		CONTRACT NO. 76K74		
	ILLINOIS	FED. AID PROJECT		

Illinois Department of Transportation
Division of Highways

SOIL BORING LOG

Page 1 of 1

Date 11/30/22

ROUTE F.A.I. RTE. 64
DESCRIPTION I-64 from West of Green Mount Rd to West of IL 158
LOGGED BY KEG

SECTION 87-7WRS-2
LOCATION

COUNTY St. Clair
DRILLING METHOD AUTO
HAMMER TYPE HSA 2 1/4"

STRUCT. NO.
Station

BORING NO. NWB-21
Station 800+00.00
Offset 91.0 ft LT
Ground Surface Elev. 568.84 ft

Surface Water Elev. ft
Stream Bed Elev. ft

Groundwater Elev.:
First Encounter 550.3 ft ▼
Upon Completion ft
After Hrs. ft

		DEPTH (ft)	BLOWS (/6")	UCS Qu (tsf)	MOIST (%)
TOPSOIL - 2"	568.7				
CLAYEY SILT - Brown, med-stiff, w/ some organics			0 1 4	1.0 P	16
becomes brown and gray		-5	3 4 6	2.0 P	23
becomes stiff			5 8 10	2.5 P	17
becomes black and med-stiff		-10	3 4 3	0.8 B	22
	557.8				
SILTY CLAY - Black, med-stiff			1 2 2	1.0 B	28
becomes gray, med-stiff		-15	1 2 1	0.8 B	32
	552.8				
CLAYEY SILT - Gray and brown, med-stiff			WH 1 2	0.7 B	28
		▼	2 2 2	0.5 B	30
	548.8	-20			

End of Boring

The Unconfined Compressive Strength (UCS) Failure Mode is indicated by (B-Bulge, S-Shear, P-Penetrometer)
The SPT (N value) is the sum of the last two blow values in each sampling zone (AASHTO T206)

BBS, form 137 (Rev. 8-99)

Illinois Department of Transportation
Division of Highways

SOIL BORING LOG

Page 1 of 1

Date 11/30/22

ROUTE F.A.I. RTE. 64
DESCRIPTION I-64 from West of Green Mount Rd to West of IL 158
LOGGED BY KEG

SECTION 87-7WRS-2
LOCATION

COUNTY St. Clair
DRILLING METHOD AUTO
HAMMER TYPE HSA 2 1/4"

STRUCT. NO.
Station

BORING NO. NWB-22
Station 802+00.00
Offset 91.0 ft LT
Ground Surface Elev. 570.79 ft

Surface Water Elev. ft
Stream Bed Elev. ft

Groundwater Elev.:
First Encounter 552.3 ft ▼
Upon Completion ft
After Hrs. ft

		DEPTH (ft)	BLOWS (/6")	UCS Qu (tsf)	MOIST (%)
TOPSOIL - 3"	570.5				
SILTY CLAY - Bown, stiff, w/ some organics			3 6 6	1.0 B	18
LL = 47, PL = 23, PI = 24		-5	2 4 6	2.1 B	22
becomes brown and gray			5 8 8	1.2 B	22
	562.3				
CLAYEY SILT - Black, med-stiff		-10	2 3 5	0.7 S	29
becomes gray			1 3 4	0.5 B	26
becomes gray and brown		-15	WH 1 1	0.2 B	34
becomes gray, brown, black and moist			WH 1 3	0.4 B	27
becomes soft and wet		▼	1 1 1	0.4 B	28
		-20			
CLAYEY SILT - Black, med-stiff *(continued)*					
becomes gray and moist			1 1 3	0.3 B	31
	545.8	-25			
End of Boring					
		-30			
		-35			
		-40			

The Unconfined Compressive Strength (UCS) Failure Mode is indicated by (B-Bulge, S-Shear, P-Penetrometer)
The SPT (N value) is the sum of the last two blow values in each sampling zone (AASHTO T206)

BBS, form 137 (Rev. 8-99)

Illinois Department of Transportation
Division of Highways

SOIL BORING LOG

Page 1 of 1

Date 11/30/22

ROUTE F.A.I. RTE. 64
DESCRIPTION I-64 from West of Green Mount Rd to West of IL 158
LOGGED BY KEG

SECTION 87-7WRS-2
LOCATION

COUNTY St. Clair
DRILLING METHOD AUTO
HAMMER TYPE HSA 2 1/4"

STRUCT. NO.
Station

BORING NO. NWB-23
Station 804+00.00
Offset 91.0 ft LT
Ground Surface Elev. 572.71 ft

Surface Water Elev. ft
Stream Bed Elev. ft

Groundwater Elev.:
First Encounter 556.7 ft ▼
Upon Completion ft
After Hrs. ft

		DEPTH (ft)	BLOWS (/6")	UCS Qu (tsf)	MOIST (%)
TOPSOIL - 3"	572.5				
CLAYEY SILT - Brown and gray, med-stiff, w/ some organics			3 4 5	1.8 B	21
	569.2				
CLAY - Gray, stiff		-5	8 9 11	3.9 B	15
	566.7				
CLAYEY SILT - Dark gray, med-stiff, moist			2 3 3	0.5 B	26
becomes stiff		-10	3 4 5	1.3 B	27
becomes gray and med-stiff			1 1 2	0.2 B	28
becomes gray and brown		-15	1 2 3	1.0 B	28
becomes wet, soft, w/ lignite stains		▼	WH WH 1	0.2 B	30
		-20	WH WH 1	0.2 B	27
CLAYEY SILT - Dark gray, med-stiff, moist *(continued)*					
	550.2				
End of Boring					
		-25			
		-30			
		-35			
		-40			

The Unconfined Compressive Strength (UCS) Failure Mode is indicated by (B-Bulge, S-Shear, P-Penetrometer)
The SPT (N value) is the sum of the last two blow values in each sampling zone (AASHTO T206)

BBS, form 137 (Rev. 8-99)

MODEL: $MODELNAME$
FILE NAME: pw://projectwise.volkert.com:volkert-us-pw/Documents/Projects/1169901 - PTB 196–056 - I-64 Widening and Reconstruction/CADD/CAD Sheets/D876K74-Sht-Noise Walls-Soil Borings.dgn

VOLKERT

USER NAME =	DESIGNED - SJN	REVISED -	
	DRAWN - MAM	REVISED -	
PLOT SCALE = 0.16666633 ' / in.	CHECKED - JLS	REVISED -	
PLOT DATE = 5/2/2024	DATE - 9-10-24	REVISED -	

STATE OF ILLINOIS
DEPARTMENT OF TRANSPORTATION

SOIL BORING LOGS - NOISE WALL 2
I-64 WIDENING AND RECONSTRUCTION

SCALE: N/A | SHEET 23 OF 38 SHEETS | STA. N/A | TO STA. N/A

F.A.I. RTE.	SECTION	COUNTY	TOTAL SHEETS	SHEET NO.
64	82-7HB-1	ST. CLAIR	691	442

CONTRACT NO. 76K74

ILLINOIS | FED. AID PROJECT

Illinois Department of Transportation
Division of Highways

SOIL BORING LOG

Page 1 of 1

Date 11/30/22

ROUTE F.A.I. RTE. 64 DESCRIPTION I-64 from West of Green Mount Rd to West of IL 158 LOGGED BY KEG

SECTION 87-7WRS-2 LOCATION

COUNTY St. Clair DRILLING METHOD AUTO HAMMER TYPE HSA 2 1/4"

STRUCT. NO.
Station

BORING NO. NWB-24
Station 806+00.00
Offset 91.0 ft LT
Ground Surface Elev. 574.32 ft

Surface Water Elev. ft
Stream Bed Elev. ft

Groundwater Elev.:
First Encounter 558.3 ft ▼
Upon Completion ft
After Hrs. ft

Description	Elev.	DEPTH (ft)	BLOWS (/6")	UCS Qu (tsf)	MOIST (%)
TOPSOIL - 3"	574.1				
SILTY CLAY - Brown, med-stiff, w/ some organics			1		
			2	1.6	27
			4	B	
becomes soft, brown and gray, w/ lignite stains			1		
			2	0.7	27
		5	2	B	
CLAYEY SILT - Gray, med-stiff	568.3		2		
			2	0.6	27
			2	B	
becomes gray and brown			1		
			2	0.7	25
		10	2	B	
			1		
			1	0.6	28
			1	B	
becomes moist			1		
			1	0.7	28
		15	1	B	
becomes brown, soft and wet		▼	WH		
			WH	0.4	25
			1	B	
w/ some sand			WH		
			1	0.3	25
	554.3	20	2	B	

End of Boring

The Unconfined Compressive Strength (UCS) Failure Mode is indicated by (B-Bulge, S-Shear, P-Penetrometer)
The SPT (N value) is the sum of the last two blow values in each sampling zone (AASHTO T206)

BBS, form 137 (Rev. 8-99)

Illinois Department of Transportation
Division of Highways

SOIL BORING LOG

Page 1 of 1

Date 11/30/22

ROUTE F.A.I. RTE. 64 DESCRIPTION I-64 from West of Green Mount Rd to West of IL 158 LOGGED BY KEG

SECTION 87-7WRS-2 LOCATION

COUNTY St. Clair DRILLING METHOD AUTO HAMMER TYPE HSA 2 1/4"

STRUCT. NO.
Station

BORING NO. NWB-25
Station 808+00.00
Offset 91.0 ft LT
Ground Surface Elev. 575.42 ft

Surface Water Elev. ft
Stream Bed Elev. ft

Groundwater Elev.:
First Encounter 561.9 ft ▼
Upon Completion ft
After Hrs. ft

Description	Elev.	DEPTH (ft)	BLOWS (/6")	UCS Qu (tsf)	MOIST (%)
TOPSOIL - 3"	575.2				
CLAYEY SILT - Brown, very soft, w/ some organics			1		
			1	0.1	25
			1	B	
becomes soft			WH		
			1	0.2	27
		5	1	B	
			WH		
			1	0.4	25
			2	B	
SILTY CLAY - Brown, soft, moist	566.9		WH		
			1	0.3	22
		10	1	B	
SANDY CLAY, Brown, soft, w/ some gravel	564.4		WH		
			1	0.2	21
			1	B	
Poor Recovery		▼	WH		
becomes wet			WH	-	21
		15	WH		
SAND - Brown, med-coarse, loose, wet, poorly graded	559.4		3		
			5	-	16
Gravel - 0.2%, Sand - 76.1%, Fines - 23.7%	558.1		9		
SILTY SAND - Gray, med-dense, fine grained, moist			4		
			8	-	14
	555.4	20	7		

End of Boring

The Unconfined Compressive Strength (UCS) Failure Mode is indicated by (B-Bulge, S-Shear, P-Penetrometer)
The SPT (N value) is the sum of the last two blow values in each sampling zone (AASHTO T206)

BBS, form 137 (Rev. 8-99)

Illinois Department of Transportation
Division of Highways

SOIL BORING LOG

Page 1 of 1

Date 11/29/22

ROUTE F.A.I. RTE. 64 DESCRIPTION I-64 from West of Green Mount Rd to West of IL 158 LOGGED BY KEG

SECTION 87-7WRS-2 LOCATION

COUNTY St. Clair DRILLING METHOD AUTO HAMMER TYPE HSA 2 1/4"

STRUCT. NO.
Station

BORING NO. NWB-26
Station 810+00
Offset 91.0 ft LT
Ground Surface Elev. 577.47 ft

Surface Water Elev. ft
Stream Bed Elev. ft

Groundwater Elev.:
First Encounter ft
Upon Completion ft
After Hrs. ft

Description	Elev.	DEPTH (ft)	BLOWS (/6")	UCS Qu (tsf)	MOIST (%)
TOPSOIL - 3"	577.2				
CLAYEY SILT - Brown, very soft, w/ some organics			0		
			1	0.2	27
			1	B	
			WH		
			1	0.3	26
		5	2	B	
becomes soft, w/ some sand			WH		
			1	0.2	23
			1	B	
SILTY CLAY - Brown, soft, w/ some sand	569.0		WH		
			1	0.4	19
		10	1	B	
SANDY CLAY - Brown, soft, moist, w/ sand and gravel	566.5		WH		
			WH	0.3	20
			2	B	
CLAYEY SAND - Brown, med-dense, well graded, w/ some gravel, moist	564.0		1		
			2	-	20
		15	2		
SAND - Brown, med-dense, poorly graded	561.5		1		
			2	-	18
			4		
w/ some gravel			WH		
			3	-	14
	557.5	20	7		

End of Boring

The Unconfined Compressive Strength (UCS) Failure Mode is indicated by (B-Bulge, S-Shear, P-Penetrometer)
The SPT (N value) is the sum of the last two blow values in each sampling zone (AASHTO T206)

BBS, form 137 (Rev. 8-99)

MODEL: $MODELNAME$
FILE NAME: pw://projectwise.volkert.com:..dms-eu-pw/Documents/Projects/165901 - PTB 195-056 - I-64 Widening and Reconstruction/CADD/CAD Sheets/D876K74-SHA-Noise Wall-Soil Borings.dgn

VOLKERT

USER NAME =	DESIGNED - SJN	REVISED -	
	DRAWN - MAM	REVISED -	
PLOT SCALE = 0.16666633 ' / in.	CHECKED - JLS	REVISED -	
PLOT DATE = 5/2/2024	DATE - 9-10-24	REVISED -	

STATE OF ILLINOIS
DEPARTMENT OF TRANSPORTATION

SOIL BORING LOGS - NOISE WALL 2
I-64 WIDENING AND RECONSTRUCTION

SCALE: N/A | SHEET 24 OF 38 SHEETS | STA. N/A | TO STA. N/A

F.A.I. RTE.	SECTION	COUNTY	TOTAL SHEETS	SHEET NO.
64	82-7HB-1	ST. CLAIR	691	443
		CONTRACT NO. 76K74		
	ILLINOIS	FED. AID PROJECT		

Illinois Department of Transportation
Division of Highways

SOIL BORING LOG

Page 1 of 1

Date 11/29/22

ROUTE F.A.I. RTE. 64 DESCRIPTION I-64 from West of Green Mount Rd to West of IL 158 LOGGED BY KEG

SECTION 87-7WRS-2 LOCATION

COUNTY St. Clair DRILLING METHOD AUTO HAMMER TYPE HSA 2 1/4"

STRUCT. NO.
Station

BORING NO. NWB-27
Station 812+00.00
Offset 91.0 ft LT
Ground Surface Elev. 578.18 ft

Surface Water Elev. ft
Stream Bed Elev. ft

Groundwater Elev.:
First Encounter ft
Upon Completion ft
After Hrs. ft

Description	Elev.	DEPTH (ft)	BLOWS (/6")	UCS Qu (tsf)	MOIST (%)
TOPSOIL - 3"	577.9				
CLAYEY SILT - Brown, very soft, w/ some organics			WH		
			1	0.1	25
			1	B	
LL = 38, PL = 24, PI = 14			1		
			2	0.3	24
		5	1	B	
becomes soft			WH		
			1	0.4	27
			1	B	
			WH		
			1	0.5	24
		10	1	B	
	567.2				
SILTY CLAY - Brown, soft, w/ some sand, moist			WH		
			1	0.2	21
			1	B	
w/ some gravel			WH		
			1	0.5	25
		15	1	B	
	562.2				
SANDY CLAY - Brown, soft, w/ some gravel and silt, moist			WH		
			1	0.0	25
			1	P	
	559.7				
SANDY SILT - Brown and gray, soft, w/ lignite stains			1		
			2	0.0	27
	558.2	20	3	P	

End of Boring
The Unconfined Compressive Strength (UCS) Failure Mode is indicated by (B-Bulge, S-Shear, P-Penetrometer)
The SPT (N value) is the sum of the last two blow values in each sampling zone (AASHTO T206)

BBS, form 137 (Rev. 8-99)

Illinois Department of Transportation
Division of Highways

SOIL BORING LOG

Page 1 of 1

Date 11/29/22

ROUTE F.A.I. RTE. 64 DESCRIPTION I-64 from West of Green Mount Rd to West of IL 158 LOGGED BY KEG

SECTION 87-7WRS-2 LOCATION

COUNTY St. Clair DRILLING METHOD AUTO HAMMER TYPE HSA 2 1/4"

STRUCT. NO.
Station

BORING NO. NWB-28
Station 814+00.00
Offset 91.0 ft LT
Ground Surface Elev. 579.24 ft

Surface Water Elev. ft
Stream Bed Elev. ft

Groundwater Elev.:
First Encounter 567.0 ft ▼
Upon Completion ft
After Hrs. ft

Description	Elev.	DEPTH (ft)	BLOWS (/6")	UCS Qu (tsf)	MOIST (%)
TOPSOIL - 2"	579.1				
CLAYEY SILT - Brown, soft, w/ some organics			1		
			1	0.5	24
			1	B	
			1		
			1	0.7	21
		5	2	B	
	573.2				
SILTY CLAY - Brown, med-stiff, w/ some organics			1		
			1	0.4	21
			1	B	
w/ some sand and gravel			1		
			3	-	23
		10	3		
	568.1				
SILTY SAND - Brown and gray, med-dense, moist			1		
			1	-	22
	567.0 ▼		2		
SAND - Brown, loose, well graded, wet					
			3		
	565.0				
SILT - Brown, med-stiff, w/ some gravel			7	3.0	19
		15	11	P	
	563.2				
CLAY - Gray, med-stiff, w/ some organics, sand and gravel			2		
			4	1.5	23
			4	B	
	560.7				
SANDY CLAY - Gray, med-stiff, w/ silt pockets			1		
			2	0.3	18
	559.2	20	4	B	

End of Boring
The Unconfined Compressive Strength (UCS) Failure Mode is indicated by (B-Bulge, S-Shear, P-Penetrometer)
The SPT (N value) is the sum of the last two blow values in each sampling zone (AASHTO T206)

BBS, form 137 (Rev. 8-99)

Illinois Department of Transportation
Division of Highways

SOIL BORING LOG

Page 1 of 1

Date 12/20/22

ROUTE F.A.I. RTE. 64 DESCRIPTION I-64 from West of Green Mount Rd to West of IL 158 LOGGED BY KEG

SECTION 87-7WRS-2 LOCATION

COUNTY St. Clair DRILLING METHOD AUTO HAMMER TYPE HSA 2 1/4"

STRUCT. NO.
Station

BORING NO. NWB-29
Station 816+00.00
Offset 91.0 ft RT
Ground Surface Elev. 580.88 ft

Surface Water Elev. ft
Stream Bed Elev. ft

Groundwater Elev.:
First Encounter ft
Upon Completion ft
After Hrs. ft

Description	Elev.	DEPTH (ft)	BLOWS (/6")	UCS Qu (tsf)	MOIST (%)
SILTY CLAY - Brown and gray, med-stiff					
Poor Recovery			1		
			2	1.0	26
	578.4		1	P	
CLAYEY SILT - Brown, med-stiff, w/ some organics					
			1		
			1	1.4	21
	575.9	5	4	B	
SILTY CLAY - Brown, med-stiff, w/ some organics					
			1		
			1	1.0	31
	573.4		2	B	
SANDY GRAVEL - Brown, loose					
			1		
			1	0.5	20
	570.9	10	3	P	
GRAVELLY SAND - Brown, loose, w/ some pebbles					
Gravel - 6.3%, Sand - 67.9%, Fines - 25.8%			1		
			1	0.5	18
	568.4		1	P	
SILTY SAND - Brown, loose, wet, w/ some organics					
			1		
			1	0.0	23
	565.9	15	2	P	
CLAYEY SILT - Brown and gray, very stiff					
			9		
			14	3.1	20
			16	B	
becomes brown, med-stif			9		
			13	0.7	16
	560.9	20	18	S	

End of Boring
The Unconfined Compressive Strength (UCS) Failure Mode is indicated by (B-Bulge, S-Shear, P-Penetrometer)
The SPT (N value) is the sum of the last two blow values in each sampling zone (AASHTO T206)

BBS, form 137 (Rev. 8-99)

MODEL: $MODELNAME$
FILE NAME: pw://projectwise.volkert.com:..dms-eu-pw/Documents/Projects/169901 - PTB 195-056 - I-64 Widening and Reconstruction/CADD/CAD Sheets/D876K74-SHA-Noise Wall-Soil Borings.dgn

VOLKERT

USER NAME =	DESIGNED - SJN	REVISED -	
	DRAWN - MAM	REVISED -	
PLOT SCALE = 0.16666633 ' / in.	CHECKED - JLS	REVISED -	
PLOT DATE = 5/2/2024	DATE - 9-10-24	REVISED -	

STATE OF ILLINOIS
DEPARTMENT OF TRANSPORTATION

SOIL BORING LOGS - NOISE WALL 2
I-64 WIDENING AND RECONSTRUCTION

SCALE: N/A | SHEET 25 OF 38 SHEETS | STA. N/A | TO STA. N/A

F.A.I. RTE.	SECTION	COUNTY	TOTAL SHEETS	SHEET NO.
64	82-7HB-1	ST. CLAIR	691	444
		CONTRACT NO. 76K74		
	ILLINOIS	FED. AID PROJECT		

Illinois Department of Transportation
Division of Highways

SOIL BORING LOG

Page 1 of 1

Date 1/23/24

ROUTE F.A.I. RTE. 64 DESCRIPTION I-64 from West of Green Mount Rd to West of IL 158 LOGGED BY KEG

SECTION 87-7WRS-2 LOCATION O'Fallon, IL

COUNTY St. Clair DRILLING METHOD AUTO HAMMER TYPE HSA 2 1/4"

STRUCT. NO.
Station

BORING NO. NWB-30
Station 818+05.00
Offset 94.5 ft RT
Ground Surface Elev. 585.10 ft

Surface Water Elev. ft
Stream Bed Elev. ft

Groundwater Elev.:
First Encounter 571.6 ft ▼
Upon Completion ft
After Hrs. ft

Description	Elev.	DEPTH (ft)	BLOWS (/6")	UCS Qu (tsf)	MOIST (%)
SILTY CLAY - Light Brown, Soft			2		
			2	0.5	25
			2	B	
becomes soft to medium stiff			WH		
			2	0.7	20
		-5	2	B	
	579.1				
CLAY - Light Brown, Soft to Medium Stiff			1		
			2	0.8	28
			2	B	
	576.6				
SANDY LOAM - Light Brownish Red, Soft, w/ gravel pieces			WH		
			2	0.3	22
		-10	1	B	
	574.1				
SAND - Light Brown, Loose to Medium Dense, Poorly Graded, Fine Grained w/ gravel pieces			3		
			3	0.2	19
			4	B	
		▼			
becomes wet and loose			1		
			1	-	28
		-15	2		
becomes very loose			1		
			WH	-	29
			WH		
becomes coarse grained			4		
			4	-	18
	565.1	-20	5		

End of Boring

The Unconfined Compressive Strength (UCS) Failure Mode is indicated by (B-Bulge, S-Shear, P-Penetrometer)
The SPT (N value) is the sum of the last two blow values in each sampling zone (AASHTO T206)

BBS, form 137 (Rev. 8-99)

Illinois Department of Transportation
Division of Highways

SOIL BORING LOG

Page 1 of 1

Date 1/24/24

ROUTE F.A.I. RTE. 64 DESCRIPTION I-64 from West of Green Mount Rd to West of IL 158 LOGGED BY KEG

SECTION 87-7WRS-2 LOCATION O'Fallon, IL

COUNTY St. Clair DRILLING METHOD AUTO HAMMER TYPE HSA 2 1/4"

STRUCT. NO.
Station

BORING NO. NWB-31
Station 821+00.00
Offset 102.2 ft RT
Ground Surface Elev. 582.70 ft

Surface Water Elev. ft
Stream Bed Elev. ft

Groundwater Elev.:
First Encounter 569.2 ft ▼
Upon Completion ft
After Hrs. ft

Description	Elev.	DEPTH (ft)	BLOWS (/6")	UCS Qu (tsf)	MOIST (%)
SILTY CLAY - Brownish Gray, Medium Stiff			1		
			2	1.2	25
			4	B	
			1		
			2	0.7	26
		-5	4	B	
			1		
			3	0.9	23
			3	B	
becomes gray w/ orange stains and soft to medium stiff			WH		
			2	0.7	24
		-10	3	B	
w/ pebbles			WH		
			2	0.6	20
			5	B	
	569.2 ▼				
SAND - Dark Brown, Coarse, Medium Dense, Wet, w/ some pebbles			9		
			9	0.5	23
		-15	10	P	
becomes orange and fine			8		
			8	-	26
			12		
			2		
			1	-	25
	562.7	-20	2		

End of Boring

The Unconfined Compressive Strength (UCS) Failure Mode is indicated by (B-Bulge, S-Shear, P-Penetrometer)
The SPT (N value) is the sum of the last two blow values in each sampling zone (AASHTO T206)

BBS, form 137 (Rev. 8-99)

Illinois Department of Transportation
Division of Highways

SOIL BORING LOG

Page 1 of 1

Date 1/24/24

ROUTE F.A.I. RTE. 64 DESCRIPTION I-64 from West of Green Mount Rd to West of IL 158 LOGGED BY KEG

SECTION 87-7WRS-2 LOCATION O'Fallon, IL

COUNTY St. Clair DRILLING METHOD AUTO HAMMER TYPE HSA 2 1/4"

STRUCT. NO.
Station

BORING NO. NWB-32
Station 824+00.00
Offset 115.1 ft RT
Ground Surface Elev. 585.60 ft

Surface Water Elev. ft
Stream Bed Elev. ft

Groundwater Elev.:
First Encounter ft
Upon Completion ft
After Hrs. ft

Description	Elev.	DEPTH (ft)	BLOWS (/6")	UCS Qu (tsf)	MOIST (%)
SILTY CLAY - Brownish Orange, Medium Stiff			2		
			2	1.0	22
			2	B	
becomes soft to medium stiff			WH		
			2	0.2	20
		-5	2	B	
	579.6				
SILT - Light Brown, Soft			4		
			5	1.8	21
			6	B	
	577.1				
SILT LOAM - Light Brown, Soft			2		
			2	>0.5	20
		-10	1	P	
	574.6				
GLACIAL TILL - Brown + Gray, Very Stiff			2		
			6	3.7	14
			9	B	
	572.1				
CLAY TILL - Gray, Medium Stiff to Stiff			6		
			8	2.1	33
		-15	9	B	
			5		
			9	3.1	11
			11	B	
	567.1				
GLACIAL TILL - Gray, Medium Stiff to Stiff			6		
			11	1.4	17
	565.6	-20	16	B	

End of Boring

The Unconfined Compressive Strength (UCS) Failure Mode is indicated by (B-Bulge, S-Shear, P-Penetrometer)
The SPT (N value) is the sum of the last two blow values in each sampling zone (AASHTO T206)

BBS, form 137 (Rev. 8-99)

MODEL: $MODELNAME$
FILE NAME: pw://projectwise.volkert.com:..dms-eu-pw/Documents/Projects/116901 - PTB 195-056 - I-64 Widening and Reconstruction/CADD/CAD Sheets/D876K74-SHA-Holes Wall-Soil Borings.dgn

VOLKERT

USER NAME =	DESIGNED - SJN	REVISED -
	DRAWN - MAM	REVISED -
PLOT SCALE = 0.16666633 ' / in.	CHECKED - JLS	REVISED -
PLOT DATE = 5/2/2024	DATE - 9-10-24	REVISED -

STATE OF ILLINOIS
DEPARTMENT OF TRANSPORTATION

SOIL BORING LOGS - NOISE WALL 3
I-64 WIDENING AND RECONSTRUCTION

SCALE: N/A | SHEET 26 OF 38 SHEETS | STA. N/A | TO STA. N/A

F.A.I. RTE.	SECTION	COUNTY	TOTAL SHEETS	SHEET NO.
64	82-7HB-1	ST. CLAIR	691	445
		CONTRACT NO. 76K74		
	ILLINOIS	FED. AID PROJECT		

Illinois Department of Transportation
Division of Highways

SOIL BORING LOG

Page 1 of 1

Date 1/25/24

ROUTE F.A.I. RTE. 64 DESCRIPTION I-64 from West of Green Mount Rd to West of IL 158 LOGGED BY KEG

SECTION 87-7WRS-2 LOCATION O'Fallon, IL

COUNTY St. Clair DRILLING METHOD AUTO HAMMER TYPE HSA 2 1/4"

STRUCT. NO.
Station

BORING NO. NWB-33
Station 826+00.00
Offset 125.4 ft RT
Ground Surface Elev. 583.70 ft

Surface Water Elev. ft
Stream Bed Elev. ft

Groundwater Elev.:
First Encounter ft
Upon Completion ft
After Hrs. ft

Description	Elev.	DEPTH (ft)	BLOWS (/6")	UCS Qu (tsf)	MOIST (%)
SILTY CLAY - Brownish Orange, Medium Stiff, w/ pebbles			2		
			3	2.1	24
			4	B	
w/ lignit stains			2		
			4	1.3	23
		-5	5	B	
becomes light brown and stiff			3		
			3	2.7	31
			5	B	
			2		
			2	2.4	32
		-10	4	B	
	572.7				
SILTY CLAY LOAM - Light Brown, Soft			1		
			1	0.4	32
			2	B	
	570.2				
SILT - Light Brownish Gray, Soft to Medium Stiff			2		
			3	0.5	24
		-15	3	B	
beocmes gray and stiff			4		
			21	2.1	22
			20	S	
			13		
			17	2.6	17
	563.7	-20	22	S	

End of Boring

The Unconfined Compressive Strength (UCS) Failure Mode is indicated by (B-Bulge, S-Shear, P-Penetrometer)
The SPT (N value) is the sum of the last two blow values in each sampling zone (AASHTO T206)

BBS, form 137 (Rev. 8-99)

Illinois Department of Transportation
Division of Highways

SOIL BORING LOG

Page 1 of 1

Date 1/25/24

ROUTE F.A.I. RTE. 64 DESCRIPTION I-64 from West of Green Mount Rd to West of IL 158 LOGGED BY KEG

SECTION 87-7WRS-2 LOCATION O'Fallon, IL

COUNTY St. Clair DRILLING METHOD AUTO HAMMER TYPE HSA 2 1/4"

STRUCT. NO.
Station

BORING NO. NWB-34
Station 828+00.00
Offset 137.2 ft RT
Ground Surface Elev. 581.90 ft

Surface Water Elev. ft
Stream Bed Elev. ft

Groundwater Elev.:
First Encounter 565.9 ft ▼
Upon Completion ft
After Hrs. ft

Description	Elev.	DEPTH (ft)	BLOWS (/6")	UCS Qu (tsf)	MOIST (%)
SILTY CLAY - Brown, Soft to Medium Stiff, w/ some small pebbles			2		
			2	1.2	21
			3	B	
			1		
			2	0.6	23
		-5	2	B	
	575.9				
SILT - Light Brown, Soft			2		
			2	0.7	23
			1	B	
becomes medium stiff			1		
			1	1.9	17
		-10	4	S	
becomes brownish gray			7		
			11	1.6	24
			9	S	
	568.4				
SILT LOAM - Light Brown, Soft			WH		
			2	-	32
		-15	4		
	565.9 ▼				
SAND - Brown, Coarse Grained, Well Sorted, Loose, Wet			4		
			7	-	15
			9		
			14		
			20	-	13
	561.9	-20	19		

End of Boring

The Unconfined Compressive Strength (UCS) Failure Mode is indicated by (B-Bulge, S-Shear, P-Penetrometer)
The SPT (N value) is the sum of the last two blow values in each sampling zone (AASHTO T206)

BBS, form 137 (Rev. 8-99)

Illinois Department of Transportation
Division of Highways

SOIL BORING LOG

Page 1 of 1

Date 1/26/24

ROUTE F.A.I. RTE. 64 DESCRIPTION I-64 from West of Green Mount Rd to West of IL 158 LOGGED BY KEG

SECTION 87-7WRS-2 LOCATION O'Fallon, IL

COUNTY St. Clair DRILLING METHOD AUTO HAMMER TYPE HSA 2 1/4"

STRUCT. NO.
Station

BORING NO. NWB-35
Station 830+00.00
Offset 153.8 ft RT
Ground Surface Elev. 577.00 ft

Surface Water Elev. ft
Stream Bed Elev. ft

Groundwater Elev.:
First Encounter ft
Upon Completion ft
After Hrs. ft

Description	Elev.	DEPTH (ft)	BLOWS (/6")	UCS Qu (tsf)	MOIST (%)
CLAY LOAM - Brown, Wet			WH		
			2	0.9	22
			3	B	
			WH		
			2	0.5	21
		-5	1	B	
			WH		
	570.0		2	0.8	16
SANDY CLAY - Brown, Coarse, Loose			3	P	
			2		
			4	1.3	29
		-10	4	P	
	566.0				
SAND - Brown, Loose, Medium Dense			4		
			6	<4.5	16
			6	P	
	563.5				
SANDY CLAY TILL - Brown			6		
			9	2.3	13
		-15	10	P	
			7		
			9	4.3	16
			9	P	
No Recovery			10		
			13	-	
	557.0	-20	14		

End of Boring

The Unconfined Compressive Strength (UCS) Failure Mode is indicated by (B-Bulge, S-Shear, P-Penetrometer)
The SPT (N value) is the sum of the last two blow values in each sampling zone (AASHTO T206)

BBS, form 137 (Rev. 8-99)

MODEL: $MODELNAME$
FILE NAME: pw://projectwise.volkert.com:volker-eu-pw/Documents/Projects/1165901 - PTB 195-056 - I-64 Widening and Reconstruction/CADD/CAD Sheets/D876K74-SHA-Noise Walls-Soil Borings.dgn

VOLKERT

USER NAME =	DESIGNED - SJN	REVISED -	
	DRAWN - MAM	REVISED -	
PLOT SCALE = 0.16666633 ' / in.	CHECKED - JLS	REVISED -	
PLOT DATE = 5/2/2024	DATE - 9-10-24	REVISED -	

STATE OF ILLINOIS
DEPARTMENT OF TRANSPORTATION

SOIL BORING LOGS - NOISE WALL 3
I-64 WIDENING AND RECONSTRUCTION

SCALE: N/A | SHEET 27 OF 38 SHEETS | STA. N/A | TO STA. N/A

F.A.I. RTE.	SECTION	COUNTY	TOTAL SHEETS	SHEET NO.
64	82-7HB-1	ST. CLAIR	691	446

CONTRACT NO. 76K74

ILLINOIS | FED. AID PROJECT

Illinois Department of Transportation
Division of Highways

SOIL BORING LOG

Page 1 of 1

Date 1/26/24

ROUTE F.A.I. RTE. 64 DESCRIPTION I-64 from West of Green Mount Rd to West of IL 158 LOGGED BY KEG

SECTION 87-7WRS-2 LOCATION O'Fallon, IL

COUNTY St. Clair DRILLING METHOD AUTO HAMMER TYPE HSA 2 1/4"

STRUCT. NO.
Station

BORING NO. NWB-36
Station 832+00.00
Offset 170.3 ft RT
Ground Surface Elev. 574.70 ft

Surface Water Elev. ft
Stream Bed Elev. ft

Groundwater Elev.:
First Encounter 566.2 ft ▼
Upon Completion ft
After Hrs. ft

	DEPTH (ft)	BLOWS (/6")	UCS Qu (tsf)	MOIST (%)
SILTY CLAY LOAM - Reddish Brown, Soft		2		
		2 3	0.5 B	26
		2		
		2 4	0.3 B	25
	-5			
		1		
		2 3	0.7 B	26
	▼			
becomes wet		1		
		2 2	0.9 B	26
	-10			
		WH		
		1 2	0.6 B	22
becomes red + brown		WH		
		2 3	1.0 B	25
	-15			
	558.2	3		
SILT - Tan, Hard		3 4	3.2 B	24
		4		
	555.2	5 5	2.5 P	26
SILTY SAND - Brown	554.7 -20			

	DEPTH (ft)	BLOWS (/6")	UCS Qu (tsf)	MOIST (%)
End of Boring				
	-25			
	-30			
	-35			
	-40			

The Unconfined Compressive Strength (UCS) Failure Mode is indicated by (B-Bulge, S-Shear, P-Penetrometer)
The SPT (N value) is the sum of the last two blow values in each sampling zone (AASHTO T206)

BBS, form 137 (Rev. 8-99)

MODEL: $MODELNAME$
FILE NAME: pw://projectwise.volkert.com:volkert-eu-pw/Documents/Projects/1165901 - PTB 139-056 - I-64 Widening and Reconstruction/CADD/CAD Sheets/D576K74-SHA-Noise Walls-Soil Borings.dgn

VOLKERT

USER NAME =	DESIGNED - SJN	REVISED -
	DRAWN - MAM	REVISED -
PLOT SCALE = 0.16666633 ' / in.	CHECKED - JLS	REVISED -
PLOT DATE = 5/2/2024	DATE - 9-10-24	REVISED -

STATE OF ILLINOIS
DEPARTMENT OF TRANSPORTATION

SOIL BORING LOGS - NOISE WALL 3
I-64 WIDENING AND RECONSTRUCTION

SCALE: N/A | SHEET 28 OF 38 SHEETS | STA. N/A | TO STA. N/A

F.A.I. RTE.	SECTION	COUNTY	TOTAL SHEETS	SHEET NO.
64	82-7HB-1	ST. CLAIR	691	447

CONTRACT NO. 76K74

ILLINOIS | FED. AID PROJECT

Illinois Department of Transportation
Division of Highways

SOIL BORING LOG

Page 1 of 1

Date 1/26/24

ROUTE F.A.I. RTE. 64 DESCRIPTION I-64 from West of Green Mount Rd to West of IL 158 LOGGED BY KEG

SECTION 87-7WRS-2 LOCATION O'Fallon, IL

COUNTY St. Clair DRILLING METHOD AUTO HAMMER TYPE HSA 2 1/4"

STRUCT. NO.
Station

BORING NO. NWB-37
Station 834+00.00
Offset 166.5 ft RT
Ground Surface Elev. 570.40 ft

Surface Water Elev. ft
Stream Bed Elev. ft

Groundwater Elev.:
First Encounter ft
Upon Completion ft
After Hrs. ft

Description	Elev.	DEPTH (ft)	BLOWS (/6")	UCS Qu (tsf)	MOIST (%)
CLAYEY SILT - Brown			1		
			2	0.2	27
			2	B	
			WH		
			2	0.2	28
		-5	2	B	
			1		
			2	2.3	26
			2	P	
			WH		
			2	2.3	25
		-10	2	P	
CLAY LOAM - Brown	559.4		1		
			3	2.5	22
			3	P	
			2		
			3	3.8	26
		-15	3	P	
SAND - Brown, Loose	554.4		1		
SANDY CLAY TILL - Brownish Gray	553.4		2	-	37
			2		
			1		
			5	-	26
	550.4	-20	8		

End of Boring

The Unconfined Compressive Strength (UCS) Failure Mode is indicated by (B-Bulge, S-Shear, P-Penetrometer)
The SPT (N value) is the sum of the last two blow values in each sampling zone (AASHTO T206)

BBS, form 137 (Rev. 8-99)

Illinois Department of Transportation
Division of Highways

SOIL BORING LOG

Page 1 of 1

Date 1/26/24

ROUTE F.A.I. RTE. 64 DESCRIPTION I-64 from West of Green Mount Rd to West of IL 158 LOGGED BY KEG

SECTION 87-7WRS-2 LOCATION O'Fallon, IL

COUNTY St. Clair DRILLING METHOD AUTO HAMMER TYPE HSA 2 1/4"

STRUCT. NO.
Station

BORING NO. NWB-38
Station 836+25.00
Offset 175.0 ft RT
Ground Surface Elev. 562.90 ft

Surface Water Elev. ft
Stream Bed Elev. ft

Groundwater Elev.:
First Encounter ft
Upon Completion ft
After Hrs. ft

Description	Elev.	DEPTH (ft)	BLOWS (/6")	UCS Qu (tsf)	MOIST (%)
SILTY CLAY LOAM - Gray			1		
			1	0.3	30
			2	B	
			1		
			2	0.2	27
		-5	2	B	
			2		
becomes brown			3	0.5	28
			2	B	
			WH		
			2	0.6	28
		-10	2	B	
			WH		
			2	0.6	25
			2	B	
			WH		
			6	1.1	21
		-15	2	B	
becomes gray + brown			1		
			2	1.0	27
			3	B	
SANDY CLAY TILL - Gray + Brown	544.4		2		
			3	1.3	20
	542.9	-20	4	B	

End of Boring

The Unconfined Compressive Strength (UCS) Failure Mode is indicated by (B-Bulge, S-Shear, P-Penetrometer)
The SPT (N value) is the sum of the last two blow values in each sampling zone (AASHTO T206)

BBS, form 137 (Rev. 8-99)

Illinois Department of Transportation
Division of Highways

SOIL BORING LOG

Page 1 of 1

Date 1/23/24

ROUTE F.A.I. RTE. 64 DESCRIPTION I-64 from West of Green Mount Rd to West of IL 158 LOGGED BY KEG

SECTION 87-7WRS-2 LOCATION O'Fallon, IL

COUNTY St. Clair DRILLING METHOD AUTO HAMMER TYPE HSA 2 1/4"

STRUCT. NO.
Station

BORING NO. NWB-39
Station 838+70.00
Offset 175.0 ft RT
Ground Surface Elev. 556.40 ft

Surface Water Elev. ft
Stream Bed Elev. ft

Groundwater Elev.:
First Encounter 542.9 ft ▼
Upon Completion ft
After Hrs. ft

Description	Elev.	DEPTH (ft)	BLOWS (/6")	UCS Qu (tsf)	MOIST (%)
SILT - Dark Gray, Medium Stiff			2		
			4	2.0	20
			8	P	
becomes light gray, soft to medium stiff, w/ organics			1		
			2	1.1	32
		-5	3	B	
SILTY CLAY - Gray, Soft	550.4		WH		
			WH	0.5	27
			1	B	
CLAY - Light Gray + Brown, Medium Stiff	547.9		1		
			2	1.5	28
		-10	3	B	
SILTY CLAY - Light Brown, Soft to Medium Stiff	545.4		1		
			2	0.8	26
			3	B	
SILT - Light Brown, Medium Stiff, Wet, w/ orange lignite stains	542.9 ▼		1		
			3	0.9	25
		-15	4	B	
			1		
			3	1.1	24
			4	B	
SILTY CLAY - Light Brown, Medium Stiff to Stiff	537.9		2		
			3	0.9	24
	536.4	-20	4	B	

End of Boring

The Unconfined Compressive Strength (UCS) Failure Mode is indicated by (B-Bulge, S-Shear, P-Penetrometer)
The SPT (N value) is the sum of the last two blow values in each sampling zone (AASHTO T206)

BBS, form 137 (Rev. 8-99)

MODEL: $MODELNAME$
FILE NAME: pw://projectwise.volkert.com:..dfiler-uswi/Documents/Projects/116901 - PTB 195-056 - I-64 Widening and Reconstruction/CADD/CAD Sheets/D876K74-SHA-Noise Wall-Soil Borings.dgn

VOLKERT

USER NAME =	DESIGNED - SJN	REVISED -	
	DRAWN - MAM	REVISED -	
PLOT SCALE = 0.16666633 ' / in.	CHECKED - JLS	REVISED -	
PLOT DATE = 5/2/2024	DATE - 9-10-24	REVISED -	

STATE OF ILLINOIS
DEPARTMENT OF TRANSPORTATION

SOIL BORING LOGS - NOISE WALL 4
I-64 WIDENING AND RECONSTRUCTION

SCALE: N/A | SHEET 29 OF 38 SHEETS | STA. N/A | TO STA. N/A

F.A.I. RTE.	SECTION	COUNTY	TOTAL SHEETS	SHEET NO.
64	82-7HB-1	ST. CLAIR	691	448
		CONTRACT NO. 76K74		
	ILLINOIS	FED. AID PROJECT		

Illinois Department of Transportation
Division of Highways

SOIL BORING LOG

Page 1 of 1

Date 1/23/24

ROUTE F.A.I. RTE. 64 DESCRIPTION I-64 from West of Green Mount Rd to West of IL 158 LOGGED BY KEG

SECTION 87-7WRS-2 LOCATION O'Fallon, IL

COUNTY St. Clair DRILLING METHOD AUTO HAMMER TYPE HSA 2 1/4"

STRUCT. NO.
Station

BORING NO. NWB-40
Station 841+05.00
Offset 340.0 ft RT
Ground Surface Elev. 556.70 ft

Surface Water Elev. ft
Stream Bed Elev. ft

Groundwater Elev.:
First Encounter 545.7 ft ▼
Upon Completion ft
After Hrs. ft

	DEPTH (ft)	BLOWS (/6")	UCS Qu (tsf)	MOIST (%)
SILTY CLAY - Light Brown + Gray, Medium Stiff		2 1 3	0.7 B	31
becomes soft		1 1 2	0.4 B	30
550.7	-5			
SILT - Gray, Soft to Medium Stiff, w/ brown + black stains		WH 2 3	0.4 B	27
		2 1 3	0.3 B	28
	-10			
▼ becomes brown, medium stiff, wet		WH 2 2	0.4 B	27
w/ red lignite stains		1 2 3	0.8 B	29
	-15			
becomes gray, medium stiff to stiff, w/ some gravel pieces		2 4 4	1.2 B	25
		2 2 4	1.3 B	23
536.7	-20			

End of Boring

The Unconfined Compressive Strength (UCS) Failure Mode is indicated by (B-Bulge, S-Shear, P-Penetrometer)
The SPT (N value) is the sum of the last two blow values in each sampling zone (AASHTO T206)

BBS, form 137 (Rev. 8-99)

MODEL: $MODELNAME$
FILE NAME: pw://projectwise.volkert.com:volkert-eu-pw/Documents/Projects/1165901 - PTB 139-256 - I-64 Widening and Reconstruction/CADD/CAD Sheets/D576K74-SH-Noise Walls-Soil Borings.dgn

VOLKERT

USER NAME =	DESIGNED - SJN	REVISED -
	DRAWN - MAM	REVISED -
PLOT SCALE = 0.16666633 ' / in.	CHECKED - JLS	REVISED -
PLOT DATE = 5/2/2024	DATE - 9-10-24	REVISED -

STATE OF ILLINOIS
DEPARTMENT OF TRANSPORTATION

SOIL BORING LOGS - NOISE WALL 4
I-64 WIDENING AND RECONSTRUCTION

SCALE: N/A | SHEET 30 OF 38 SHEETS | STA. N/A | TO STA. N/A

F.A.I. RTE.	SECTION	COUNTY	TOTAL SHEETS	SHEET NO.
64	82-7HB-1	ST. CLAIR	691	449

CONTRACT NO. 76K74

ILLINOIS | FED. AID PROJECT

Illinois Department of Transportation
Division of Highways

SOIL BORING LOG

Page 1 of 1

Date 12/14/22

ROUTE F.A.I. RTE. 64 DESCRIPTION I-64 from West of Green Mount Rd to West of IL 158 LOGGED BY KEG

SECTION 87-7WRS-2 LOCATION

COUNTY St. Clair DRILLING METHOD AUTO HAMMER TYPE HSA 2 1/4"

STRUCT. NO.
Station

BORING NO. NWB-41
Station 842+00.00
Offset 91.0 ft LT
Ground Surface Elev. 551.29 ft

Surface Water Elev. ft
Stream Bed Elev. ft

Groundwater Elev.:
First Encounter 535.3 ft ▼
Upon Completion ft
After Hrs. ft

Description	Elev.	DEPTH (ft)	BLOWS (/6")	UCS Qu (tsf)	MOIST (%)
CLAYEY SILT - Dark brown, very stiff			1		
			3	1.9	25
			4	B	
	547.8				
SILTY CLAY - Brown and gray, med-stiff, w/ some organics			3		
		-5	3	1.4	23
			5	B	
no more organics			2		
			3	0.9	25
			4	B	
	542.8				
CLAYEY SILT - Gray, very soft LL = 40, PL = 25, PI = 15			1		
			1	0.6	28
		-10	4	S	
			1		
			1	0.3	27
			1	S	
			WH		
			1	0.8	28
		-15	2	B	
	535.3 ▼				
SILTY CLAY - Dark gray, very stiff, wet			WH		
			2	1.2	26
			2	B	
			1		
			2	1.1	29
	531.3	-20	2	B	

End of Boring

The Unconfined Compressive Strength (UCS) Failure Mode is indicated by (B-Bulge, S-Shear, P-Penetrometer)
The SPT (N value) is the sum of the last two blow values in each sampling zone (AASHTO T206)

BBS, form 137 (Rev. 8-99)

Illinois Department of Transportation
Division of Highways

SOIL BORING LOG

Page 1 of 1

Date 12/13/22

ROUTE F.A.I. RTE. 64 DESCRIPTION I-64 from West of Green Mount Rd to West of IL 158 LOGGED BY KEG

SECTION 87-7WRS-2 LOCATION

COUNTY St. Clair DRILLING METHOD AUTO HAMMER TYPE HSA 2 1/4"

STRUCT. NO.
Station

BORING NO. NWB-42
Station 846+00.00
Offset 91.0 ft LT
Ground Surface Elev. 544.86 ft

Surface Water Elev. ft
Stream Bed Elev. ft

Groundwater Elev.:
First Encounter ft
Upon Completion ft
After Hrs. ft

Description	Elev.	DEPTH (ft)	BLOWS (/6")	UCS Qu (tsf)	MOIST (%)
TOPSOIL - 1"	544.8				
SILTY CLAY - Brown and gray, med-stiff			1		
			1	1.0	31
			3	B	
			1		
		-5	3	0.8	19
			2	B	
			1		
			1	0.9	26
			2	B	
			1		
			1	0.7	29
		-10	3	B	
			WH		
			1	0.8	27
			2	B	
			WH		
			1	0.4	27
		-15	2	B	
become dark gray			WH		
			2	0.0	26
			2	B	
			WH		
			1	0.5	-
		-20	2	B	
SILTY CLAY - Brown and gray, med-stiff *(continued)*					
			1		
			2	0.6	25
	519.9	-25	3	S	
End of Boring					
		-30			
		-35			
		-40			

The Unconfined Compressive Strength (UCS) Failure Mode is indicated by (B-Bulge, S-Shear, P-Penetrometer)
The SPT (N value) is the sum of the last two blow values in each sampling zone (AASHTO T206)

BBS, form 137 (Rev. 8-99)

Illinois Department of Transportation
Division of Highways

SOIL BORING LOG

Page 1 of 1

Date 12/13/22

ROUTE F.A.I. RTE. 64 DESCRIPTION I-64 from West of Green Mount Rd to West of IL 158 LOGGED BY KEG

SECTION 87-7WRS-2 LOCATION

COUNTY St. Clair DRILLING METHOD AUTO HAMMER TYPE HSA 2 1/4"

STRUCT. NO.
Station

BORING NO. NWB-43
Station 848+00.00
Offset 115.0 ft LT
Ground Surface Elev. 544.20 ft

Surface Water Elev. ft
Stream Bed Elev. ft

Groundwater Elev.:
First Encounter ft
Upon Completion ft
After Hrs. ft

Description	Elev.	DEPTH (ft)	BLOWS (/6")	UCS Qu (tsf)	MOIST (%)
CLAYEY SILT - Brown, very stiff, w/ some organics			1		
			3	2.4	26
			4	B	
			2		
LL = 51, PL = 24, PI = 27					
			3	2.5	27
		-5	3	B	
			1		
becomes med-stiff			2	0.5	30
			2	B	
			1		
becomes brown and gray			2	1.1	26
		-10	2	B	
	533.2				
SILTY CLAY - Brown and gray, med-stiff			WH		
			WH	0.6	28
			1	B	
			WH		
			1	0.6	28
		-15	1	B	
			WH		
			1	0.7	27
			2	B	
	525.7				
CLAYEY SILT - Dark gray, very stiff			WH		
			2	1.1	26
	524.2	-20	3	B	

End of Boring

The Unconfined Compressive Strength (UCS) Failure Mode is indicated by (B-Bulge, S-Shear, P-Penetrometer)
The SPT (N value) is the sum of the last two blow values in each sampling zone (AASHTO T206)

BBS, form 137 (Rev. 8-99)

MODEL: $MODELNAME$
FILE NAME: pw://projectwise.volkert.com:..dms-eu-pw/Documents/Projects/165901 - PTB 195-056 - I-64 Widening and Reconstruction/CADD/CAD Sheets/D876K74-SHN-Noise Wall-Soil Borings.dgn

VOLKERT

USER NAME =	DESIGNED - SJN	REVISED -
	DRAWN - MAM	REVISED -
PLOT SCALE = 0.16666633 ' / in.	CHECKED - JLS	REVISED -
PLOT DATE = 5/2/2024	DATE - 9-10-24	REVISED -

STATE OF ILLINOIS
DEPARTMENT OF TRANSPORTATION

SOIL BORING LOGS - NOISE WALL 5
I-64 WIDENING AND RECONSTRUCTION

SCALE: N/A | SHEET 31 OF 38 SHEETS | STA. N/A | TO STA. N/A

F.A.I. RTE.	SECTION	COUNTY	TOTAL SHEETS	SHEET NO.
64	82-7HB-1	ST. CLAIR	691	450
		CONTRACT NO. 76K74		
		ILLINOIS	FED. AID PROJECT	

Illinois Department of Transportation
Division of Highways

SOIL BORING LOG

Page 1 of 1

Date 12/13/22

ROUTE F.A.I. RTE. 64 DESCRIPTION I-64 from West of Green Mount Rd to West of IL 158 LOGGED BY KEG

SECTION 87-7WRS-2 LOCATION

COUNTY St. Clair DRILLING METHOD AUTO HAMMER TYPE HSA 2 1/4"

STRUCT. NO.
Station

BORING NO. NWB-44
Station 850+00.00
Offset 115.0 ft LT
Ground Surface Elev. 542.08 ft

Surface Water Elev. ft
Stream Bed Elev. ft

Groundwater Elev.:
First Encounter ft
Upon Completion ft
After Hrs. ft

Description	Elev.	DEPTH (ft)	BLOWS (/6")	UCS Qu (tsf)	MOIST (%)
TOPSOIL - 1"	542.0				
SILTY CLAY - Brown, med-stiff, w/ some gravel			2		
			5	1.1	21
			5	B	
Poor Recovery			2		
			2	3.0	28
		-5	3	P	
becomes brown and gray			WH		
			2	0.5	28
			3	B	
CLAYEY SILT - Brown, soft	533.6		1		
			2	0.4	28
		-10	2	B	
Gravel - 0.0%, Sand - 0.5%, Fines - 99.5%			1		
			2	0.2	26
			2	B	
			WH		
			2	0.4	26
		-15	2	B	
SILTY CLAY - Gray, med-stiff	526.1		1		
			1	1.1	26
			2	B	
Poor Recovery			1		
			2	1.0	-
		-20	2	P	
SILTY CLAY - Gray, med-stiff *(continued)*					
becomes dark gray and stiff			1		
			1	1.2	26
	519.6		4	B	
End of Boring					

The Unconfined Compressive Strength (UCS) Failure Mode is indicated by (B-Bulge, S-Shear, P-Penetrometer)
The SPT (N value) is the sum of the last two blow values in each sampling zone (AASHTO T206)

BBS, form 137 (Rev. 8-99)

Illinois Department of Transportation
Division of Highways

SOIL BORING LOG

Page 1 of 1

Date 12/14/22

ROUTE F.A.I. RTE. 64 DESCRIPTION I-64 from West of Green Mount Rd to West of IL 158 LOGGED BY KEG

SECTION 87-7WRS-2 LOCATION

COUNTY St. Clair DRILLING METHOD AUTO HAMMER TYPE HSA 2 1/4"

STRUCT. NO.
Station

BORING NO. NWB-45
Station 852+00.00
Offset 115.0 ft LT
Ground Surface Elev. 538.87 ft

Surface Water Elev. ft
Stream Bed Elev. ft

Groundwater Elev.:
First Encounter 527.9 ft ▼
Upon Completion ft
After Hrs. ft

Description	Elev.	DEPTH (ft)	BLOWS (/6")	UCS Qu (tsf)	MOIST (%)
TOPSOIL - 1"	538.8				
CLAYEY SILT - Gray and brown, very stiff			4		
Poor Recovery			4	>4.5	28
			6	P	
	535.4				
SILTY CLAY - Brown, med-stiff, w/ some organics			2		
			3	1.1	27
		-5	4	B	
			1		
			1	0.7	27
			3	B	
CLAYEY SILT - Gray and brown, soft, w/ some organics	530.4		1		
			1	0.3	29
		-10	2	B	
▼ no more organics, becomes wet			1		
			2	0.6	28
			2	B	
	525.4				
SILTY CLAY - Gray and brown, soft, wet			WH		
			1	0.3	26
		-15	2	B	
becomes stiff			1		
			1	0.0	25
			2	B	
			WH		
			2	0.6	28
	518.9	-20	1	B	
End of Boring					

The Unconfined Compressive Strength (UCS) Failure Mode is indicated by (B-Bulge, S-Shear, P-Penetrometer)
The SPT (N value) is the sum of the last two blow values in each sampling zone (AASHTO T206)

BBS, form 137 (Rev. 8-99)

Illinois Department of Transportation
Division of Highways

SOIL BORING LOG

Page 1 of 1

Date 12/16/22

ROUTE F.A.I. RTE. 64 DESCRIPTION I-64 from West of Green Mount Rd to West of IL 158 LOGGED BY KEG

SECTION 87-7WRS-2 LOCATION

COUNTY St. Clair DRILLING METHOD AUTO HAMMER TYPE HSA 2 1/4"

STRUCT. NO.
Station

BORING NO. NWB-46
Station 854+00.00
Offset 115.0 ft LT
Ground Surface Elev. 532.56 ft

Surface Water Elev. ft
Stream Bed Elev. ft

Groundwater Elev.:
First Encounter 520.1 ft ▼
Upon Completion ft
After Hrs. ft

Description	Elev.	DEPTH (ft)	BLOWS (/6")	UCS Qu (tsf)	MOIST (%)
TOPSOIL - 1"	532.5				
SILTY CLAY - Brown, very stiff			2		
			2	0.9	27
			2	B	
			WH		
			WH	0.5	30
		-5	1	S	
w/ some organics			1		
LL = 33, PL = 24, PI = 9			1	0.1	27
			2	B	
			1		
			2	0.9	26
		-10	4	B	
	521.6				
CLAYEY SILT - Brown, very stiff, wet				1.4	25
▼	519.1				
SILTY CLAY - Brown and gray, very stiff, moist			1		
			2	1.0	26
		-15	3	B	
			1		
			2	0.7	26
			2	B	
			1		
			1	1.0	25
	512.6	-20	2	B	
End of Boring					

The Unconfined Compressive Strength (UCS) Failure Mode is indicated by (B-Bulge, S-Shear, P-Penetrometer)
The SPT (N value) is the sum of the last two blow values in each sampling zone (AASHTO T206)

BBS, form 137 (Rev. 8-99)

MODEL: $MODELNAME$
FILE NAME: pw://projectwise.volkert.com:..dfiler-uswi/Documents/Projects/169901 - PTB 195-056 - I-64 Widening and Reconstruction/CADD/CAD Sheets/D876K74-SHN-Noise Wall-Soil Borings.dgn

VOLKERT

USER NAME =	DESIGNED - SJN	REVISED -
	DRAWN - MAM	REVISED -
PLOT SCALE = 0.16666633 ' / in.	CHECKED - JLS	REVISED -
PLOT DATE = 5/2/2024	DATE - 9-10-24	REVISED -

STATE OF ILLINOIS
DEPARTMENT OF TRANSPORTATION

SOIL BORING LOGS - NOISE WALL 5
I-64 WIDENING AND RECONSTRUCTION

SCALE: N/A | SHEET 32 OF 38 SHEETS | STA. N/A | TO STA. N/A

F.A.I. RTE.	SECTION	COUNTY	TOTAL SHEETS	SHEET NO.
64	82-7HB-1	ST. CLAIR	691	451
		CONTRACT NO. 76K74		
		ILLINOIS	FED. AID PROJECT	

Illinois Department of Transportation
Division of Highways

SOIL BORING LOG

Page 1 of 1

Date 12/16/22

ROUTE F.A.I. RTE. 64 DESCRIPTION I-64 from West of Green Mount Rd to West of IL 158 LOGGED BY KEG

SECTION 87-7WRS-2 LOCATION

COUNTY St. Clair DRILLING METHOD AUTO HAMMER TYPE HSA 2 1/4"

STRUCT. NO.
Station

BORING NO. NWB-47
Station 856+00.00
Offset 115.0 ft LT
Ground Surface Elev. 531.11 ft

Surface Water Elev. ft
Stream Bed Elev. ft

Groundwater Elev.:
First Encounter ft
Upon Completion ft
After Hrs. ft

Description	Elev.	DEPTH (ft)	BLOWS (/6")	UCS Qu (tsf)	MOIST (%)
CLAYEY SILT - Brown, very stiff			2		
			4	1.6	19
			4	B	
			2		
			3	0.8	24
		-5	3	B	
SILTY CLAY - Brown and gray, medium stiff	525.1		1		
			1	0.3	28
			2	B	
			WH		
			2	0.6	26
		-10	2	B	
CLAYEY SILT - Brown and gray, medium stiff	520.1		WH		
			2	4.5	26
			3	P	
SILTY CLAY - Brown, very stiff	517.6		1		
			2	1.1	26
		-15	3	B	
			2		
			3	1.2	23
			4	B	
becomes Dark grey			WH		
			2	1.3	23
	511.1	-20	2	B	

End of Boring

The Unconfined Compressive Strength (UCS) Failure Mode is indicated by (B-Bulge, S-Shear, P-Penetrometer)
The SPT (N value) is the sum of the last two blow values in each sampling zone (AASHTO T206)

BBS, form 137 (Rev. 8-99)

Illinois Department of Transportation
Division of Highways

SOIL BORING LOG

Page 1 of 1

Date 12/13/22

ROUTE F.A.I. RTE. 64 DESCRIPTION I-64 from West of Green Mount Rd to West of IL 158 LOGGED BY KEG

SECTION 87-7WRS-2 LOCATION

COUNTY St. Clair DRILLING METHOD AUTO HAMMER TYPE HSA 2 1/4"

STRUCT. NO.
Station

BORING NO. NWB-48
Station 858+00.00
Offset 91.0 ft LT
Ground Surface Elev. 525.92 ft

Surface Water Elev. ft
Stream Bed Elev. ft

Groundwater Elev.:
First Encounter 507.4 ft ▼
Upon Completion ft
After Hrs. ft

Description	Elev.	DEPTH (ft)	BLOWS (/6")	UCS Qu (tsf)	MOIST (%)
TOPSOIL - 1"	525.8				
SILTY CLAY - Brown, soft, w/ some organics			2		
			1	0.4	29
			1	B	
	522.4				
CLAYEY SILT - Gray, med-stiff Gravel - 3.5%, Sand - 6.8%, Fines - 89.7%			2		
			3	0.5	25
		-5	2	S	
SILTY CLAY - Gray, med-stiff	519.9		WH		
			WH	0.1	28
			1	S	
			WH		
			WH	0.2	28
		-10	1	B	
1" of gravel seams at 11'			1		
			1	0.3	25
			2	B	
			WH		
			1	0.6	27
		-15	1	B	
			WH		
			1	0.5	22
			1	S	
	507.4 ▼				
CLAYEY SILT - Gray, med-stiff, wet, w/ some gravel and sand			1		
			2	0.2	15
	505.9	-20	4	S	

End of Boring

The Unconfined Compressive Strength (UCS) Failure Mode is indicated by (B-Bulge, S-Shear, P-Penetrometer)
The SPT (N value) is the sum of the last two blow values in each sampling zone (AASHTO T206)

BBS, form 137 (Rev. 8-99)

Illinois Department of Transportation
Division of Highways

SOIL BORING LOG

Page 1 of 1

Date 12/3/22

ROUTE F.A.I. RTE. 64 DESCRIPTION I-64 from West of Green Mount Rd to West of IL 158 LOGGED BY KEG

SECTION 87-7WRS-2 LOCATION

COUNTY St. Clair DRILLING METHOD AUTO HAMMER TYPE HSA 2 1/4"

STRUCT. NO.
Station

BORING NO. NWB-49
Station 859+99.90
Offset 91.0 ft LT
Ground Surface Elev. 523.69 ft

Surface Water Elev. ft
Stream Bed Elev. ft

Groundwater Elev.:
First Encounter ft
Upon Completion ft
After Hrs. ft

Description	Elev.	DEPTH (ft)	BLOWS (/6")	UCS Qu (tsf)	MOIST (%)
TOPSOIL - 1.5"	523.6				
SILTY CLAY - Brown, med-stiff, w/ some organics			1		
			2	0.6	24
			2	B	
	520.2				
CLAYEY SILT - Brown and gray, med-stiff			2		
			3	0.6	27
		-5	4	B	
	517.7				
SILTY CLAY - Gray, med-stiff, w/ some sand, med-dense			1		
			1	0.3	25
			1	S	
	515.2				
CLAYEY SILT - Brown and gray, med-stiff			1		
			1	0.4	27
		-10	2	S	
			WH		
			WH	0.5	26
			2	B	
	510.2				
SILTY CLAY - Gray, med-stiff, w/ some gravel			1		
			2	1.3	22
		-15	2	B	
becomes brown and gray			1		
			3	1.5	21
			4	B	
	505.2				
SANDY GRAVEL - Gray, med-dense			WH		
			2	0.4	18
	503.7	-20	3	S	

End of Boring

The Unconfined Compressive Strength (UCS) Failure Mode is indicated by (B-Bulge, S-Shear, P-Penetrometer)
The SPT (N value) is the sum of the last two blow values in each sampling zone (AASHTO T206)

BBS, form 137 (Rev. 8-99)

MODEL: $MODELNAME$
FILE NAME: pw://projectwise.volkert.com:..dms-eu-pw/Documents/Projects/116901 - PTB 195-056 - I-64 Widening and Reconstruction/CADD/CAD Sheets/D876K74-SHA-Notes Walls-Soil Borings.dgn

VOLKERT

USER NAME =	DESIGNED - SJN	REVISED -	
	DRAWN - MAM	REVISED -	
PLOT SCALE = 0.16666633 ' / in.	CHECKED - JLS	REVISED -	
PLOT DATE = 5/2/2024	DATE - 9-10-24	REVISED -	

STATE OF ILLINOIS
DEPARTMENT OF TRANSPORTATION

SOIL BORING LOGS - NOISE WALL 5
I-64 WIDENING AND RECONSTRUCTION

SCALE: N/A | SHEET 33 OF 38 SHEETS | STA. N/A | TO STA. N/A

F.A.I. RTE.	SECTION	COUNTY	TOTAL SHEETS	SHEET NO.
64	82-7HB-1	ST. CLAIR	691	452
		CONTRACT NO. 76K74		
		ILLINOIS	FED. AID PROJECT	

Illinois Department of Transportation
Division of Highways

SOIL BORING LOG

Page 1 of 1

Date 12/19/22

ROUTE F.A.I. RTE. 64 DESCRIPTION I-64 from West of Green Mount Rd to West of IL 158 LOGGED BY KEG

SECTION 87-7WRS-2 LOCATION

COUNTY St. Clair DRILLING METHOD AUTO HAMMER TYPE HSA 2 1/4"

STRUCT. NO.
Station

BORING NO. NWB-50
Station 861+99.38
Offset 101.0 ft LT
Ground Surface Elev. 522.65 ft

Surface Water Elev. ft
Stream Bed Elev. ft

Groundwater Elev.:
First Encounter ft
Upon Completion ft
After Hrs. ft

Description	Elev.	DEPTH (ft)	BLOWS (/6")	UCS Qu (tsf)	MOIST (%)
TOPSOIL - 1"	522.6				
SILTY CLAY - Brown, med-stiff			1		
			3	0.4	16
	520.2		6	B	
CLAYEY SILT - Gray and brown, med-stiff			4		
			5	0.7	22
	517.7	-5	6	S	
SILTY CLAY - Brown and gray, stiff, w/ some organics			2		
			3	0.9	23
			4	B	
			2		
			2	1.6	23
		-10	4	B	
becomes gray, med-stiff			1		
			2	1.5	22
			3	B	
becomes brown and gray, w/ some organics			2		
			2	1.3	16
		-15	4	B	
becomes gray			1		
			2	1.2	23
			3	B	
w/ some pebbles and gravel			2		
			3	0.7	22
	502.7	-20	5	S	

End of Boring

The Unconfined Compressive Strength (UCS) Failure Mode is indicated by (B-Bulge, S-Shear, P-Penetrometer)
The SPT (N value) is the sum of the last two blow values in each sampling zone (AASHTO T206)

BBS, form 137 (Rev. 8-99)

Illinois Department of Transportation
Division of Highways

SOIL BORING LOG

Page 1 of 1

Date 12/19/22

ROUTE F.A.I. RTE. 64 DESCRIPTION I-64 from West of Green Mount Rd to West of IL 158 LOGGED BY KEG

SECTION 87-7WRS-2 LOCATION

COUNTY St. Clair DRILLING METHOD AUTO HAMMER TYPE HSA 2 1/4"

STRUCT. NO.
Station

BORING NO. NWB-51
Station 863+98.86
Offset 101.0 ft LT
Ground Surface Elev. 520.59 ft

Surface Water Elev. ft
Stream Bed Elev. ft

Groundwater Elev.:
First Encounter ft
Upon Completion ft
After Hrs. ft

Description	Elev.	DEPTH (ft)	BLOWS (/6")	UCS Qu (tsf)	MOIST (%)
SILTY CLAY - Brown and gray, med-stiff			1		
			1	0.4	24
	518.1		2	S	
CLAYEY SILT - Brown and gray, med-stiff, w/ some organics LL = 30, PL = 24, PI = 6			1		
			1	0.5	27
	515.6	-5	2	S	
SILTY CLAY - Brown and gray, med-stiff			1		
			2	0.6	26
			2	B	
			1		
			2	0.6	27
		-10	4	B	
becomes brown, w/ some organics			2		
			2	0.4	24
			2	B	
becomes stiff			1		
			2	1.3	25
		-15	2	B	
			1		
			2	1.0	23
			2	B	
becomes dark gray, w/ gravel and sand,wet			WH		
			1	0.3	18
	500.6	-20	2	S	

End of Boring

The Unconfined Compressive Strength (UCS) Failure Mode is indicated by (B-Bulge, S-Shear, P-Penetrometer)
The SPT (N value) is the sum of the last two blow values in each sampling zone (AASHTO T206)

BBS, form 137 (Rev. 8-99)

Illinois Department of Transportation
Division of Highways

SOIL BORING LOG

Page 1 of 1

Date 12/12/22

ROUTE F.A.I. RTE. 64 DESCRIPTION I-64 from West of Green Mount Rd to West of IL 158 LOGGED BY KEG

SECTION 87-7WRS-2 LOCATION

COUNTY St. Clair DRILLING METHOD AUTO HAMMER TYPE HSA 2 1/4"

STRUCT. NO.
Station

BORING NO. NWB-52
Station 865+98.34
Offset 91.0 ft LT
Ground Surface Elev. 519.30 ft

Surface Water Elev. ft
Stream Bed Elev. ft

Groundwater Elev.:
First Encounter ft
Upon Completion ft
After Hrs. ft

Description	Elev.	DEPTH (ft)	BLOWS (/6")	UCS Qu (tsf)	MOIST (%)
TOPSOIL - 1"	518.5				
SILTY CLAY - Brown, med-stiff, w/ some organics			1		
			4	1.8	22
			5	B	
becomes Brown and gray			1		
			3	1.3	23
		-5	5	B	
CLAYEY SILT - Dark gray, stiff	513.3		3		
			5	1.5	18
			7	B	
			1		
			2	0.2	21
		-10	4	S	
becomes Brown and gray, w/ gravely sand, med-dense			2		
			1	0.3	24
			3	S	
SILTY CLAY - Brown and gray, very stiff	505.8		1		
			2	2.1	24
		-15	3	B	
Gravel - 0.6%, Sand - 29.4%, Fines - 70.0%			1		
			1	0.6	23
			1	S	
SILTY SAND - Gray, med-stiff	500.8		2		
			9	0.2	24
End of Boring	499.3	-20	8	S	

The Unconfined Compressive Strength (UCS) Failure Mode is indicated by (B-Bulge, S-Shear, P-Penetrometer)
The SPT (N value) is the sum of the last two blow values in each sampling zone (AASHTO T206)

BBS, form 137 (Rev. 8-99)

Illinois Department of Transportation
Division of Highways

SOIL BORING LOG

Page 1 of 1

Date 12/12/22

ROUTE F.A.I. RTE. 64 DESCRIPTION I-64 from West of Green Mount Rd to West of IL 158 LOGGED BY KEG

SECTION 87-7WRS-2 LOCATION

COUNTY St. Clair DRILLING METHOD AUTO HAMMER TYPE HSA 2 1/4"

STRUCT. NO.
Station

BORING NO. NWB-53
Station 867+97.82
Offset 91.0 ft LT
Ground Surface Elev. 522.28 ft

Surface Water Elev. ft
Stream Bed Elev. ft

Groundwater Elev.:
First Encounter ft
Upon Completion ft
After Hrs. ft

Description	Elev.	DEPTH (ft)	BLOWS (/6")	UCS Qu (tsf)	MOIST (%)
CLAYEY SILT - Gray and brown, med-stiff			2		
			3	0.5	20
			5	S	
			3		
			4	0.6	26
		-5	5	S	
becomes Brown, w/ some organics			2		
			2	0.5	24
			3	B	
			1		
			1	0.6	24
		-10	3	S	
SILTY CLAY - Brown and gray, med-stiff, poor recovery	511.3		2		
			2	0.8	25
			4	B	
			1		
			3		24
		-15	3		
			2		
			2	0.9	20
			2	B	
			1		
			2	0.7	23
End of Boring	502.3	-20	3	S	

The Unconfined Compressive Strength (UCS) Failure Mode is indicated by (B-Bulge, S-Shear, P-Penetrometer)
The SPT (N value) is the sum of the last two blow values in each sampling zone (AASHTO T206)

BBS, form 137 (Rev. 8-99)

Illinois Department of Transportation
Division of Highways

SOIL BORING LOG

Page 1 of 1

Date 12/12/22

ROUTE F.A.I. RTE. 64 DESCRIPTION I-64 from West of Green Mount Rd to West of IL 158 LOGGED BY KEG

SECTION 87-7WRS-2 LOCATION

COUNTY St. Clair DRILLING METHOD AUTO HAMMER TYPE HSA 2 1/4"

STRUCT. NO.
Station

BORING NO. NWB-54
Station 869+97.30
Offset 91.0 ft LT
Ground Surface Elev. 522.57 ft

Surface Water Elev. ft
Stream Bed Elev. ft

Groundwater Elev.:
First Encounter ft
Upon Completion ft
After Hrs. ft

Description	Elev.	DEPTH (ft)	BLOWS (/6")	UCS Qu (tsf)	MOIST (%)
TOPSOIL - 1"	521.7				
SILTY CLAY - Brown, med-stiff			3		
			4	2.5	25
			4	B	
CLAYEY SILT - Dark gray, med-stiff, w/ some organics LL = 37, PL = 24, PI = 13	519.1		1		
			2	0.4	26
		-5	1	S	
SILTY CLAY - Brown and gray, med-stiff, w/ some organics	516.6		1		
			1	0.5	25
			2	B	
CLAYEY SILT - Brown and gray, med-stiff	514.1		1		
			2	0.4	25
		-10	3	B	
SILTY CLAY - Brown, med-stiff	511.6		1		
			2	0.6	24
			3	B	
becomes Brown and gray, w/ some pebbles			2		
			2	1.5	25
		-15	3	B	
			1		
			1	1.1	26
			2	B	
CLAYEY SILT - Brown and gray, med-stiff, w/ gravel and pebbles	504.1		1		
			3	1.4	22
End of Boring	502.6	-20	2	B	

The Unconfined Compressive Strength (UCS) Failure Mode is indicated by (B-Bulge, S-Shear, P-Penetrometer)
The SPT (N value) is the sum of the last two blow values in each sampling zone (AASHTO T206)

BBS, form 137 (Rev. 8-99)

MODEL: $MODELNAME$
FILE NAME: pw://projectwise.volkert.com:..dms-eu-pw/Documents/Projects/165901 - PTB 195-056 - I-64 Widening and Reconstruction/CADD/CAD Sheets/D876K74-SHA-Noise Wall-Soil Borings.dgn

VOLKERT

USER NAME =	DESIGNED - SJN	REVISED -
	DRAWN - MAM	REVISED -
PLOT SCALE = 0.16666633 ' / in.	CHECKED - JLS	REVISED -
PLOT DATE = 5/2/2024	DATE - 9-10-24	REVISED -

STATE OF ILLINOIS
DEPARTMENT OF TRANSPORTATION

SOIL BORING LOGS - NOISE WALL 7
I-64 WIDENING AND RECONSTRUCTION

SCALE: N/A | SHEET 35 OF 38 SHEETS | STA. N/A | TO STA. N/A

F.A.I. RTE.	SECTION	COUNTY	TOTAL SHEETS	SHEET NO.
64	82-7HB-1	ST. CLAIR	691	454
		CONTRACT NO. 76K74		
		ILLINOIS	FED. AID PROJECT	

Illinois Department of Transportation
Division of Highways

SOIL BORING LOG

Page 1 of 1

Date 12/12/22

ROUTE F.A.I. RTE. 64 DESCRIPTION I-64 from West of Green Mount Rd to West of IL 158 LOGGED BY KEG

SECTION 87-7WRS-2 LOCATION

COUNTY St. Clair DRILLING METHOD AUTO HAMMER TYPE HSA 2 1/4"

STRUCT. NO.
Station

BORING NO. NWB-55
Station 872+10.99
Offset 91.0 ft LT
Ground Surface Elev. 524.01 ft

Surface Water Elev. ft
Stream Bed Elev. ft

Groundwater Elev.:
First Encounter ft
Upon Completion ft
After Hrs. ft

Description	Elev.	DEPTH (ft)	BLOWS (/6")	UCS Qu (tsf)	MOIST (%)
SILTY CLAY - Dark Gray and brown, med-stiff			2		
			3	1.1	22
			6	B	
becomes Gray			2		
			4	0.8	23
		5	6	B	
	518.0				
CLAY - Dark Gray, med-stiff			1		
			1	0.7	26
			3	B	
	515.5				
SILTY CLAY - Brown and gray, med-stiff			WH		
			1	0.6	27
		10	1	B	30
			1		
			1	0.4	26
			2	B	
	510.5				
CLAYEY SILT - Brown and gray, med-stiff			1		
			2	0.8	23
		15	2	B	35
	508.0				
SILTY CLAY - Brown and gray, med-stiff, w/ pebbles and gravel			1		
			2	1.1	22
			3	B	
	505.5				
CLAYEY SILT - Gray, med-stiff Gravel - 1.9%, Sand - 29.3%, Fines - 68.8%			1		
			2	0.8	24
		20	1	B	40

Description	Elev.	DEPTH (ft)	BLOWS (/6")	UCS Qu (tsf)	MOIST (%)
	503.0				
SILTY CLAY - Brown and gray, med-stiff, w/ sandy gravel			2		
			3	0.4	15
	501.5		4	S	
End of Boring					

The Unconfined Compressive Strength (UCS) Failure Mode is indicated by (B-Bulge, S-Shear, P-Penetrometer)
The SPT (N value) is the sum of the last two blow values in each sampling zone (AASHTO T206)

BBS, form 137 (Rev. 8-99)

Illinois Department of Transportation
Division of Highways

SOIL BORING LOG

Page 1 of 1

Date 12/9/22

ROUTE F.A.I. RTE. 64 DESCRIPTION I-64 from West of Green Mount Rd to West of IL 158 LOGGED BY KEG

SECTION 87-7WRS-2 LOCATION

COUNTY St. Clair DRILLING METHOD AUTO HAMMER TYPE HSA 2 1/4"

STRUCT. NO.
Station

BORING NO. NWB-56
Station 874+10.47
Offset 91.0 ft LT
Ground Surface Elev. 525.93 ft

Surface Water Elev. ft
Stream Bed Elev. ft

Groundwater Elev.:
First Encounter ft
Upon Completion ft
After Hrs. ft

Description	Elev.	DEPTH (ft)	BLOWS (/6")	UCS Qu (tsf)	MOIST (%)
CLAYEY SILT - Gray, med-stiff			3		
			5	1.1	22
			3	B	
becomes Brown			2		
			1	0.8	27
		5	2	B	
	519.9				
SILTY CLAY - Gray and brown, med-stiff LL = 39, PL = 25, PI = 14			1		
			2	0.6	28
			1	B	
	517.4				
CLAYEY SILT - Brown, med-stiff			2		
			3	0.6	27
		10	2	B	
	514.9				
SILTY CLAY - Brown, med-stiff			2		
			2	0.7	26
			2	B	
			2		
			2	0.7	23
		15	3	B	
	509.9				
CLAYEY SILT - Gray and brown, med-stiff, w/ gravel			2		
			2	0.6	24
			4	B	
	507.4				
SILTY CLAY - Brown and gray, med-stiff			1		
			2	0.7	26
	505.9	20	3	B	
End of Boring					

The Unconfined Compressive Strength (UCS) Failure Mode is indicated by (B-Bulge, S-Shear, P-Penetrometer)
The SPT (N value) is the sum of the last two blow values in each sampling zone (AASHTO T206)

BBS, form 137 (Rev. 8-99)

Illinois Department of Transportation
Division of Highways

SOIL BORING LOG

Page 1 of 1

Date 12/9/22

ROUTE F.A.I. RTE. 64 DESCRIPTION I-64 from West of Green Mount Rd to West of IL 158 LOGGED BY KEG

SECTION 87-7WRS-2 LOCATION

COUNTY St. Clair DRILLING METHOD AUTO HAMMER TYPE HSA 2 1/4"

STRUCT. NO.
Station

BORING NO. NWB-57
Station 876+09.95
Offset 91.0 ft LT
Ground Surface Elev. 527.26 ft

Surface Water Elev. ft
Stream Bed Elev. ft

Groundwater Elev.:
First Encounter ft
Upon Completion ft
After Hrs. ft

Description	Elev.	DEPTH (ft)	BLOWS (/6")	UCS Qu (tsf)	MOIST (%)
TOPSOIL - 1"	526.4				
CLAYEY SILT - Brown, med-stiff			2		
			4	0.4	22
			3	B	
	523.8				
SILTY CLAY - Gray, med-stiff			2		
			2	0.5	24
		5	3	B	
	521.3				
CLAY - Brown, med-stiff			1		
			2	0.6	26
			3	B	
w/ some organics			1		
			2	0.6	25
		10	4	B	30
	516.3				
SILTY CLAY - Brown and gray, med-stiff			2		
			2	0.6	22
			2	B	
becomes Dark Brown and gray			1		
			2	1.0	24
		15	3	B	35
			1		
			2	0.8	24
			2	B	
	508.8				
CLAYEY SILT - Brown, med-stiff, moist, w/ some organics			WH		
			WH	0.6	22
		20	1	S	40

Description	Elev.	DEPTH (ft)	BLOWS (/6")	UCS Qu (tsf)	MOIST (%)
CLAYEY SILT - Brown, med-stiff, moist, w/ some organics *(continued)*			3		
			3	0.9	19
	504.8		6	B	
End of Boring					

The Unconfined Compressive Strength (UCS) Failure Mode is indicated by (B-Bulge, S-Shear, P-Penetrometer)
The SPT (N value) is the sum of the last two blow values in each sampling zone (AASHTO T206)

BBS, form 137 (Rev. 8-99)

MODEL: $MODELNAME$
FILE NAME: pw://projectwise.volkert.com:..dms-eu-pw/Documents/Projects/169201 - PTB 195-056 - I-64 Widening and Reconstruction/CADD/CAD Sheets/D876K74-SHA-Notes Wall-Soil Borings.dgn

VOLKERT

USER NAME =	DESIGNED - SJN	REVISED -
	DRAWN - MAM	REVISED -
PLOT SCALE = 0.16666633 ' / in.	CHECKED - JLS	REVISED -
PLOT DATE = 5/2/2024	DATE - 9-10-24	REVISED -

STATE OF ILLINOIS
DEPARTMENT OF TRANSPORTATION

SOIL BORING LOGS - NOISE WALL 7
I-64 WIDENING AND RECONSTRUCTION

SCALE: N/A | SHEET 36 OF 38 SHEETS | STA. N/A | TO STA. N/A

F.A.I. RTE.	SECTION	COUNTY	TOTAL SHEETS	SHEET NO.
64	82-7HB-1	ST. CLAIR	691	455
		CONTRACT NO. 76K74		
	ILLINOIS	FED. AID PROJECT		

Illinois Department of Transportation
Division of Highways

SOIL BORING LOG

Page 1 of 1

Date 12/9/22

ROUTE F.A.I. RTE. 64 DESCRIPTION I-64 from West of Green Mount Rd to West of IL 158 LOGGED BY KEG

SECTION 87-7WRS-2 LOCATION

COUNTY St. Clair DRILLING METHOD AUTO HAMMER TYPE HSA 2 1/4"

STRUCT. NO.
Station

BORING NO. NWB-58
Station 878+09.43
Offset 90.6 ft LT
Ground Surface Elev. 527.53 ft

Surface Water Elev. ft
Stream Bed Elev. ft

Groundwater Elev.:
First Encounter 511.5 ft ▼
Upon Completion ft
After Hrs. ft

Description	Elev.	DEPTH (ft)	BLOWS (/6")	UCS Qu (tsf)	MOIST (%)
TOPSOIL - 1"	527.4				
SILTY CLAY - Brown, med-stiff			1		
			1	0.7	21
			1	B	
	524.0				
CLAY - Brown, med-stiff, w/ organics			1		
			1	0.5	25
		-5	2	S	
	521.5				
SILTY CLAY - Brown, med-stiff			1		
			1	0.4	23
			2	B	
	519.0				
CLAY - Brown, med-stiff LL = 35, PL = 20, PI = 15			1		
			2	0.6	20
		-10	2	B	
w/ some organics			1		
			1	0.6	24
			2	B	
	514.0				
CLAYEY SILT - Brown and gray, med-stiff, w/ organics			2		
			2	1.1	25
		-15	3	B	
▼ becomes wet, poor recovery			WH		
			WH	0.4	24
			WH	S	
	509.0				
SANDY SILT - Light brown, soft to med-stiff			WH		
			2	-	25
	507.5	-20	3		

End of Boring

The Unconfined Compressive Strength (UCS) Failure Mode is indicated by (B-Bulge, S-Shear, P-Penetrometer)
The SPT (N value) is the sum of the last two blow values in each sampling zone (AASHTO T206)

BBS, form 137 (Rev. 8-99)

MODEL: $MODELNAME$
FILE NAME: pw://projectwise.volkert.com:volkert-eu-pw/Documents/Projects/1165901 - PTB 139-256 - I-64 Widening and Reconstruction/CADD/CAD Sheets/D976K74-SH-Noise Walls-Soil Borings.dgn

VOLKERT

USER NAME =	DESIGNED - SJN	REVISED -
	DRAWN - MAM	REVISED -
PLOT SCALE = 0.16666633 ' / in.	CHECKED - JLS	REVISED -
PLOT DATE = 5/2/2024	DATE - 9-10-24	REVISED -

STATE OF ILLINOIS
DEPARTMENT OF TRANSPORTATION

SOIL BORING LOGS - NOISE WALL 7
I-64 WIDENING AND RECONSTRUCTION

SCALE: N/A | SHEET 37 OF 38 SHEETS | STA. N/A | TO STA. N/A

F.A.I. RTE.	SECTION	COUNTY	TOTAL SHEETS	SHEET NO.
64	82-7HB-1	ST. CLAIR	691	456
		CONTRACT NO. 76K74		
	ILLINOIS	FED. AID PROJECT		

Illinois Department of Transportation
Division of Highways

SOIL BORING LOG

Page 1 of 1

Date 12/9/22

ROUTE F.A.I. RTE. 64 DESCRIPTION I-64 from West of Green Mount Rd to West of IL 158 LOGGED BY KEG

SECTION 87-7WRS-2 LOCATION

COUNTY St. Clair DRILLING METHOD AUTO HAMMER TYPE HSA 2 1/4"

STRUCT. NO.
Station

BORING NO. NWB-59
Station 880+08.91
Offset 111.0 ft LT
Ground Surface Elev. 527.04 ft

Surface Water Elev. ft
Stream Bed Elev. ft

Groundwater Elev.:
First Encounter 508.5 ft ▼
Upon Completion ft
After Hrs. ft

Description	Elev.	DEPTH (ft)	BLOWS (/6")	UCS Qu (tsf)	MOIST (%)
SILTY CLAY - Brown, med-stiff			WH		
			1	0.3	26
			2	B	
	523.5				
CLAY - Brown, med-stiff, w/ some gravel			1		
		5	1	0.9	27
			2	B	
	521.0				
SILTY CLAY - Brown, med-stiff			1		
			1	0.6	23
			2	B	
			WH		
			1	0.5	19
		10	2	B	
	516.0				
CLAY - Brown and gray, med-stiff, w/ some organics			WH		
			1	0.5	23
			2	B	
			1		
			1	0.4	18
		15	2	B	
	511.0				
GRAVELLY SAND - wet, loose, poor recovery			WH		
			1	-	24
			1	B	
	508.5 ▼				
GRAVELLY CLAY - Brown, med-stiff, wet			4		
			6	0.3	22
	507.0	20	5	S	

End of Boring

The Unconfined Compressive Strength (UCS) Failure Mode is indicated by (B-Bulge, S-Shear, P-Penetrometer)
The SPT (N value) is the sum of the last two blow values in each sampling zone (AASHTO T206)

BBS, form 137 (Rev. 8-99)

Illinois Department of Transportation
Division of Highways

SOIL BORING LOG

Page 1 of 1

Date 12/19/22

ROUTE F.A.I. RTE. 64 DESCRIPTION I-64 from West of Green Mount Rd to West of IL 158 LOGGED BY KEG

SECTION 87-7WRS-2 LOCATION

COUNTY St. Clair DRILLING METHOD AUTO HAMMER TYPE HSA 2 1/4"

STRUCT. NO.
Station

BORING NO. NWB-60
Station 882+08.39
Offset 111.0 ft LT
Ground Surface Elev. 527.05 ft

Surface Water Elev. ft
Stream Bed Elev. ft

Groundwater Elev.:
First Encounter ft
Upon Completion ft
After Hrs. ft

Description	Elev.	DEPTH (ft)	BLOWS (/6")	UCS Qu (tsf)	MOIST (%)
CLAYEY SILT - Brown and gray, very stiff, w/ some organics			5		
			5	2.8	21
			5	B	
becomes gray and brown med-stiff LL = 39, PL = 22, PI = 17			1		
			2	0.6	25
	522.1	5	2	B	
SILTY CLAY - brown and gray, med-stiff, w/ some organics			1		
			1	0.9	24
			3	B	
			1		
			1	1.2	24
		10	2	B	
			1		
			1	1.1	24
			2	B	
			1		
			1	1.1	24
	512.1	15	3	B	
CLAYEY SILT - Brown and gray, soft, w/ gravel, pebbles and organics			1		
			1	0.5	20
	509.6		1	S	
SILTY CLAY - Gray and brown, very soft, w/ some organics			1		
			2	0.2	14
	507.1	20	3	S	

End of Boring

The Unconfined Compressive Strength (UCS) Failure Mode is indicated by (B-Bulge, S-Shear, P-Penetrometer)
The SPT (N value) is the sum of the last two blow values in each sampling zone (AASHTO T206)

BBS, form 137 (Rev. 8-99)

Illinois Department of Transportation
Division of Highways

SOIL BORING LOG

Page 1 of 1

Date 12/19/22

ROUTE F.A.I. RTE. 64 DESCRIPTION I-64 from West of Green Mount Rd to West of IL 158 LOGGED BY KEG

SECTION 87-7WRS-2 LOCATION

COUNTY St. Clair DRILLING METHOD AUTO HAMMER TYPE HSA 2 1/4"

STRUCT. NO.
Station

BORING NO. NWB-61
Station 883+60.00
Offset 111.0 ft LT
Ground Surface Elev. 528.80 ft

Surface Water Elev. ft
Stream Bed Elev. ft

Groundwater Elev.:
First Encounter ft
Upon Completion ft
After Hrs. ft

Description	Elev.	DEPTH (ft)	BLOWS (/6")	UCS Qu (tsf)	MOIST (%)
TOPSOIL - 2.5"	528.6				
SILTY CLAY - Brown and gray, very stiff, w/ some organics			1		
			2	1.1	27
			4	B	
becomes med-stiff			1		
			2	0.6	26
		5	3	B	
			2		
			1	0.5	27
			3	B	
becomes dark brown			1		
			2	0.7	25
		10	3	B	
becomes brown and gray LL = 35, PL = 23, PI = 12			1		
			2	0.6	26
			2	B	
becomes very stiff, wet			1		
			2	0.7	21
		15	2	B	
becoems brown, very stiff, w/ some organics			2		
			2	1.1	22
			4	B	
Poor Recovery			WH		
			WH	0.5	-
		20	1	P	
SILTY CLAY - Brown and gray, very stiff, w/ some organics *(continued)* becomes soft, w/ some organics			2		
			2	0.4	15
	506.3		4	B	
End of Boring					

The Unconfined Compressive Strength (UCS) Failure Mode is indicated by (B-Bulge, S-Shear, P-Penetrometer)
The SPT (N value) is the sum of the last two blow values in each sampling zone (AASHTO T206)

BBS, form 137 (Rev. 8-99)

MODEL: $MODELNAME$
FILE NAME: pw://projectwise.volkert.com:..dfiles-eu-pw/Documents/Projects/165901 - PTB 195-056 - I-64 Widening and Reconstruction/CADD/CAD Sheets/D876K74-SHA-Noise Wall-Soil Borings.dgn

VOLKERT

USER NAME =	DESIGNED - SJN	REVISED -
	DRAWN - MAM	REVISED -
PLOT SCALE = 0.16666633 ' / in.	CHECKED - JLS	REVISED -
PLOT DATE = 5/2/2024	DATE - 9-10-24	REVISED -

STATE OF ILLINOIS
DEPARTMENT OF TRANSPORTATION

SOIL BORING LOGS - NOISE WALL 8
I-64 WIDENING AND RECONSTRUCTION

SCALE: N/A | SHEET 38 OF 38 SHEETS | STA. N/A | TO STA. N/A

F.A.I. RTE.	SECTION	COUNTY	TOTAL SHEETS	SHEET NO.
64	82-7HB-1	ST. CLAIR	691	457
		CONTRACT NO. 76K74		
	ILLINOIS	FED. AID PROJECT		

Existing Structure: S.N. 082-0181 was constructed in 1971 as Section 82-7HB-1. In 2005, the concrete deck received crack sealing, repairs, and a microsilica concrete overlay. The parapets were extended and bearings replaced at the pier and both abutments, including adding cap extensions at each bearing location. The structure consists of vaulted abutments supported by spread footings with driven H-Piles, and a multiple column hammerhead pier supported by a spread footing with driven H-Piles. The back-to-back of approach bents length measures 257'-1", the out-to-out of deck width measures 46'-0". The span lengths are both 95'-6". The structure is skewed 24°07'35" left forward. One lane of bi-directional traffic will be maintained utilizing stage construction for daytime closures.

No Salvage.

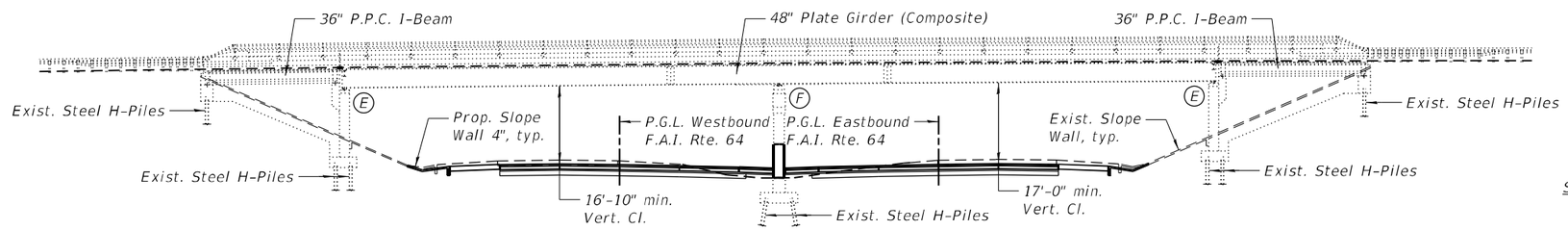

ELEVATION

(Looking East, Projected from Local Tangent @ Sta. 40+03.48)

INDEX OF SHEETS

EXISTING CURVE DATA
S. LINCOLN AVE. (C.H. 43)

Δ = 17°13'49" (LT)
D = 2°00'00"
R = 2,864.79'
T = 434.03'
L = 861.51'
E = 32.69'
P.C. Sta. = 37+35.57
P.I. Sta. = 41+69.60
P.T. Sta. = 45+97.08
S.E. = 2.5%

NOTE:

See Signing Plans for any modifications required to the bridge mounted sign structures, and for replacement signs.

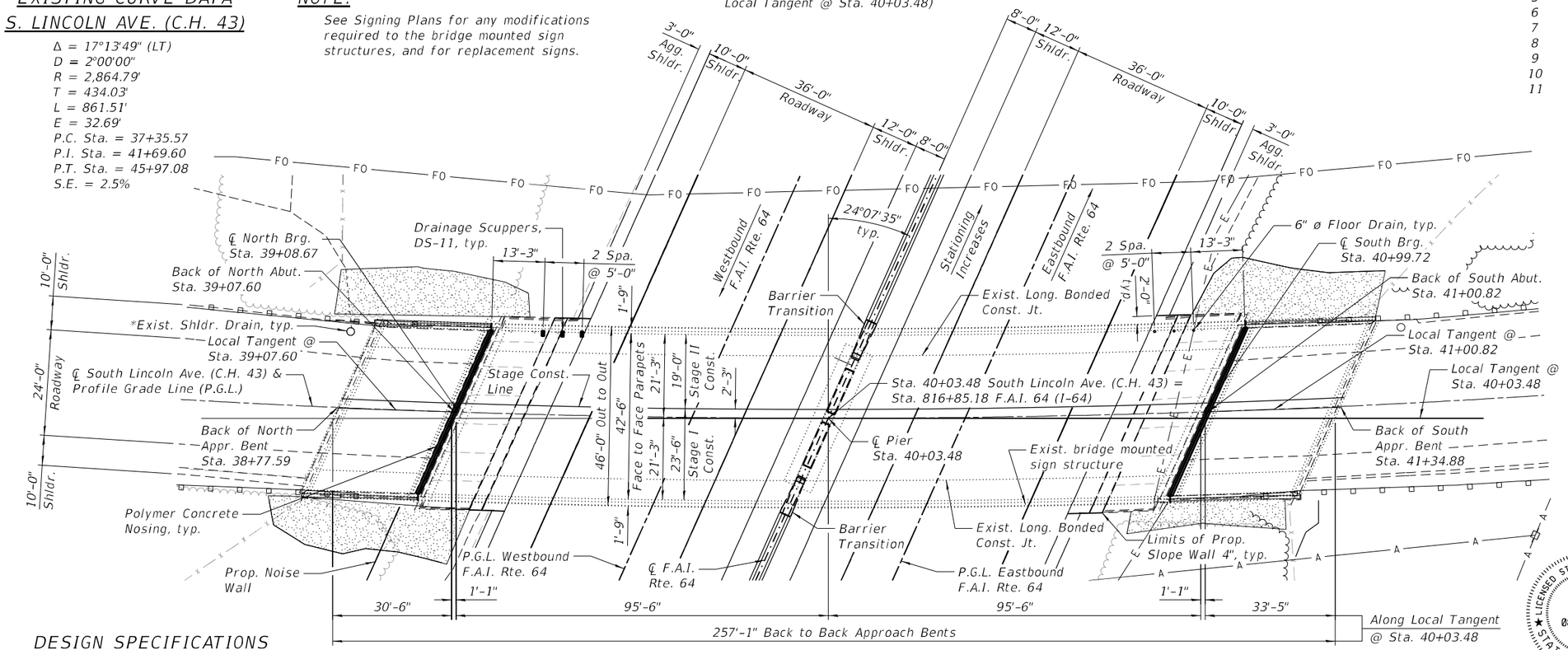

PLAN

*Existing shoulder drains to be cleaned in accordance with the special provisions. Paid for as Cleaning Existing Inlets.

DESIGN SPECIFICATIONS

2002 AASHTO Standard Specifications for Highway Bridges

EXISTING DESIGN STRESSES

FIELD UNITS (1969):

f'c = 3,000 psi (Deck)
f'c = 3,500 psi (Curb, Parapet, Substructure)
fy = 40,000 psi (Reinforcement)
fy = 36,000 psi (Structural Steel)

PRECAST PRESTRESSED UNITS (1969):

f'c = 5,000 psi
f'ci = 4,000 psi
fs' = 248,000 psi (Strands)
fsi = 173,600 psi (Strands)

PROPOSED DESIGN STRESSES

FIELD UNITS:

f'c = 3,500 psi
f'c = 4,000 psi (Superstructure)
fy = 60,000 psi (Reinforcement)

LOADING HS 20-44

No allowance for future wearing surface.

SCOPE OF WORK

1.) Traffic will be maintained utilizing stage construction for daytime closures.
2.) Repair the concrete deck and approach slabs.
3.) Remove and replace existing Silicone Joint Seals at the expansion joints.
4.) Remove and replace rectangular floor drains with 6" ø Floor Drains and Drainage Scuppers, DS-11.
5.) Pier crashwall modifications and median barrier transitions.
6.) Substructure repairs.
7.) Reconfigure slope walls, including gutter removal and replacement.

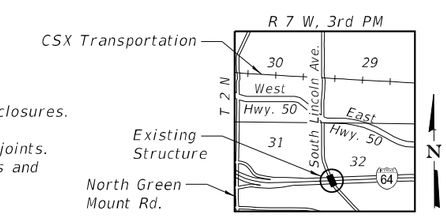

LOCATION SKETCH

LICENSED STRUCTURAL ENGINEER VINCENT P. TABOR 081-007047 STATE OF ILLINOIS

Vincent P. Tabor 03/19/2025
Vincent P. Tabor — Date
Licensed Structural Engineer
State of Illinois No. 081-007047
Expires 11/30/2026

SOUTH LINCOLN AVENUE (C.H. 43)
OVER I-64
F.A.I. RTE. 64 - SEC. 82-7WRS-2
ST. CLAIR COUNTY
STATION 40+03.48
STRUCTURE NO. 082-0181

Farnsworth GROUP

	DESIGNED - DJM	REVISED
	CHECKED - VPT	REVISED
	DRAWN - DJM	REVISED
DATE - 09/12/2024	CHECKED - VPT	REVISED

STATE OF ILLINOIS
DEPARTMENT OF TRANSPORTATION

GENERAL PLAN AND ELEVATION

SHEET NO. 1 OF 11 SHEETS

F.A.I. RTE.	SECTION	COUNTY	TOTAL SHEETS	SHEET NO.
64	82-7WRS-2	ST. CLAIR	691	458

CONTRACT NO. 76K74

ILLINOIS

TOTAL BILL OF MATERIAL

ITEM	UNIT	TOTAL
Concrete Removal	Cu. Yd.	13.5
Floor Drains	Each	3
Concrete Structures	Cu. Yd.	21.4
Protective Coat	Sq. Yd.	14
Reinforcement Bars, Epoxy Coated	Pound	1,590
Slope Wall 4 Inch	Sq. Yd.	106
Concrete Sealer	Sq. Ft.	14,861
Epoxy Crack Injection	Foot	553
Approach Slab Repair (Partial Depth)	Sq. Yd.	2
Cleaning Existing Inlets	Each	2
Structural Repair Of Concrete (Depth Equal To Or Less Than 5 Inches)	Sq. Ft.	47
Deck Slab Repair (Full Depth, Type I)	Sq. Yd.	5
Deck Slab Repair (Partial)	Sq. Yd.	2
Drainage Scuppers, DS-11	Each	3
Silicone Joint Sealer, 1.5"	Foot	100
Polymer Concrete	Cu. Ft.	15

GENERAL NOTES:

1.) Reinforcement bars designated (E) shall be epoxy coated.
2.) Plan dimensions and details relative to the existing structure have been taken from existing plans and are subject to nominal construction variations. The Contractor shall field verify existing dimensions and details affecting new construction and make necessary approved adjustments prior to construction or ordering of materials. Such variations shall not be cause for additional compensation for a change in scope of the work, however, the Contractor will be paid for the quantity actually furnished at the unit price bid for the work.
3.) A protective coat shall be applied to new concrete adjacent to the expansion joints; and to the finished surfaces of all deck, approach slab, and inside face of parapet repairs.
4.) The deck surface shall have its final finish tined according to Article 420.09(e)(1) of the Standard Specifications. This final finish will not be measured for payment, but shall be included in the contract unit price for the associated work.
5.) Concrete Sealer shall be applied according to Section 587 of the Standard Specifications to the entire existing top surface of the bridge deck and approach slabs; the existing top and inside vertical faces of the parapets, end posts, and wings; all exposed faces of the abutment, wingwall, and pier repairs; new concrete on pier crashwalls and barrier transitions; and also on the traffic face of the existing abutment and pier surfaces.
6.) All new structural steel shall be hot-dip galvanized. See Special Provisions for Hot Dip Galvanizing for Structural Steel.
7.) Stationing shown along South Lincoln Ave. has been taken from the 1969 existing plans.
8.) The Contractor may request copies of existing construction plans that are currently on file with the Department. The request shall be in writing with the understanding that any reproduction cost will be at the Contractor's expense at no additional cost to the Department.

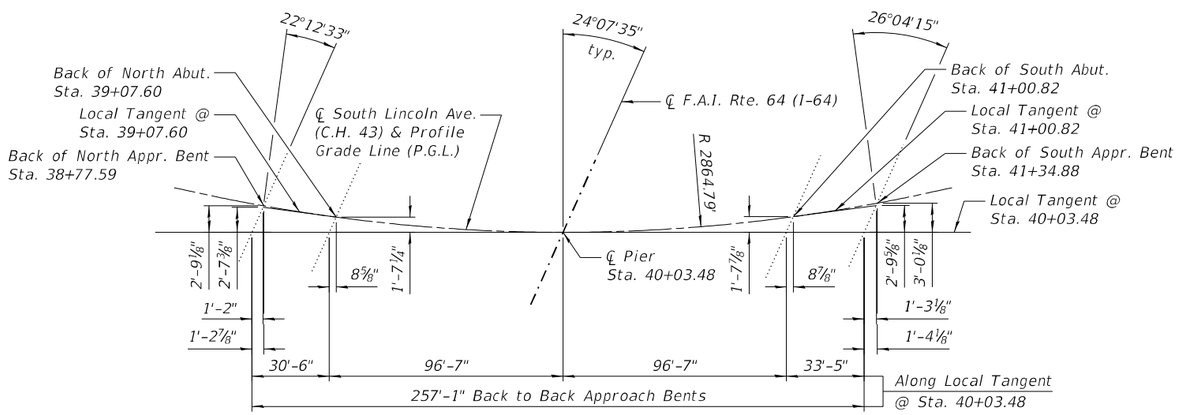

OFFSET SKETCH

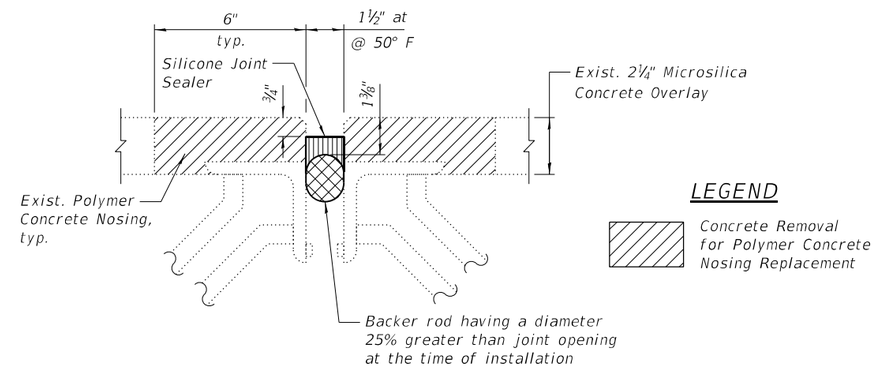

SILICONE JOINT SEALER DETAIL

Removal of existing Silicone Joint Sealer and backer rod will not be paid for separately, but shall be included in the cost of Silicone Joint Sealer. See the Special Provisions.

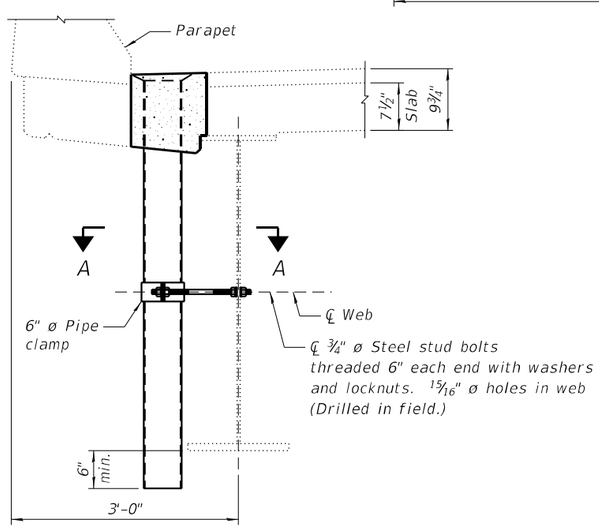

SECTION THRU FLOOR DRAIN

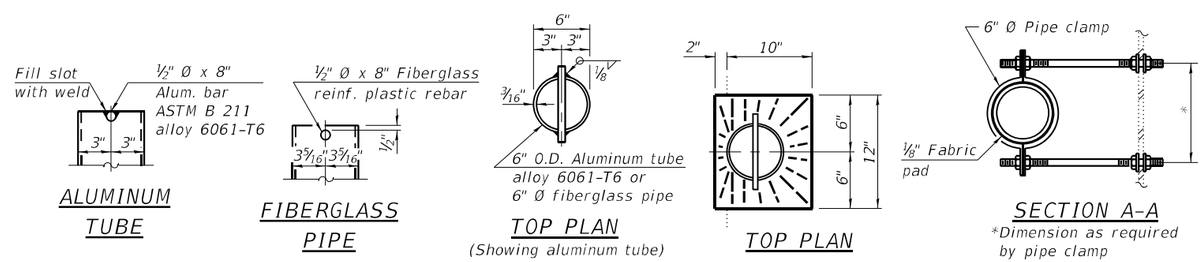

Notes:

Fiberglass pipe shall conform to ASTM D2996, with short-time rupture strength hoop tensile stress of 30,000 p.s.i. minimum.

The exterior surfaces of the floor drains shall be painted according to Article 506 with the finish coat as specified. The exterior surfaces of the drains shall be cleaned according to the Society of Protective Coating's Spec. SSPC-SP1 prior to painting.

The top portion of aluminum floor drains shall be coated to minimize reaction with wet concrete.

The clamping device shall be galvanized according to AASHTO M 232. Cost of clamping device included with Floor Drains.

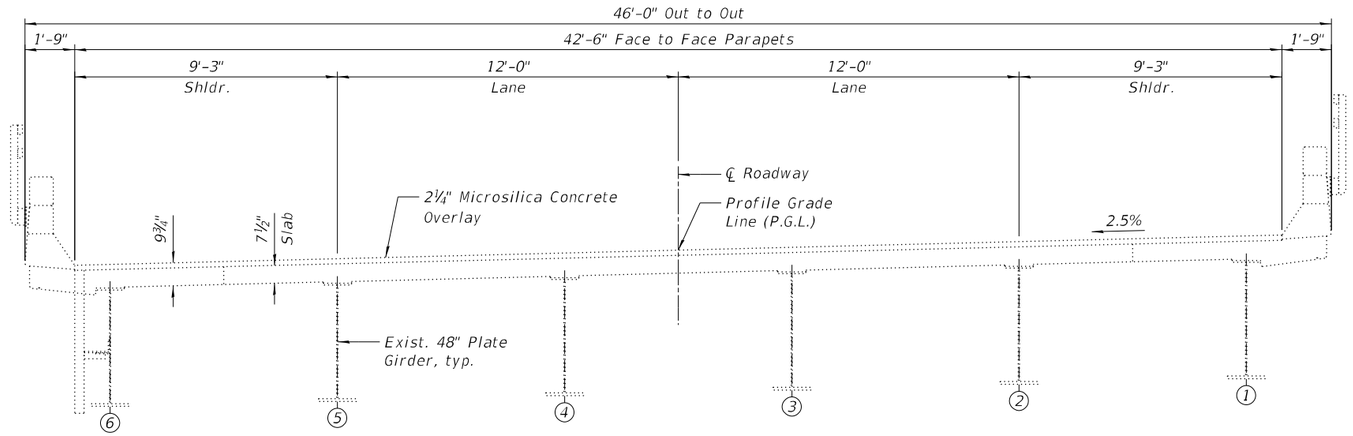

EXISTING CROSS SECTION

(Looking South)
Horizontal dimensions are radial.

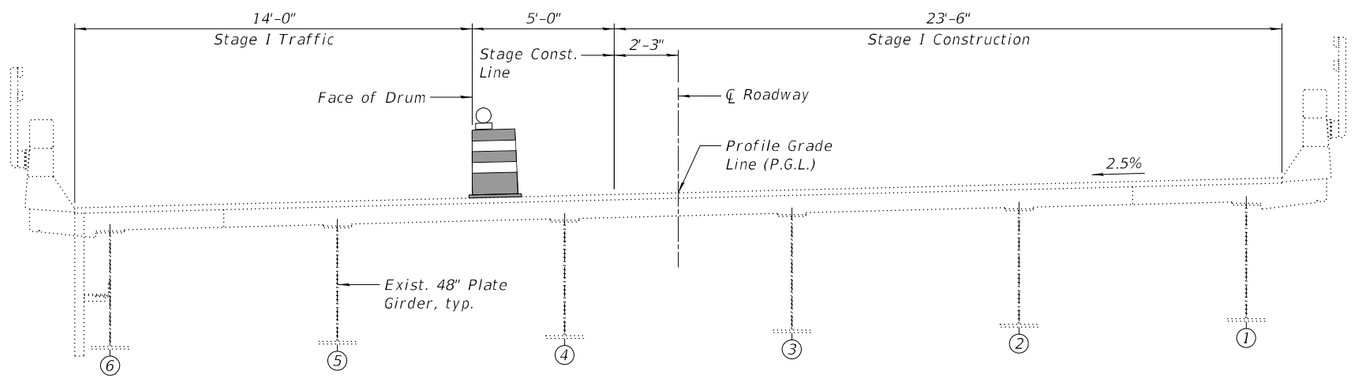

STAGE I TRAFFIC AND CONSTRUCTION

(Looking South)
Horizontal dimensions are radial.

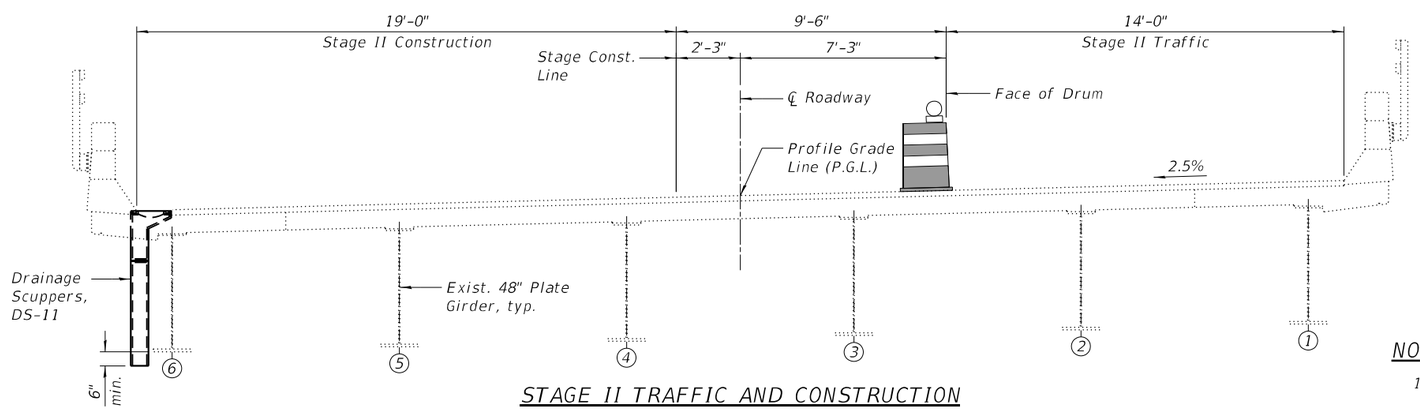

STAGE II TRAFFIC AND CONSTRUCTION

(Looking South)
Horizontal dimensions are radial.

NOTES:

1.) One lane of bi-directional traffic will be maintained utilizing stage construction for daytime closures.
2.) See Maintenance of Traffic plans and special provisions for additional daytime closure details and requirements.

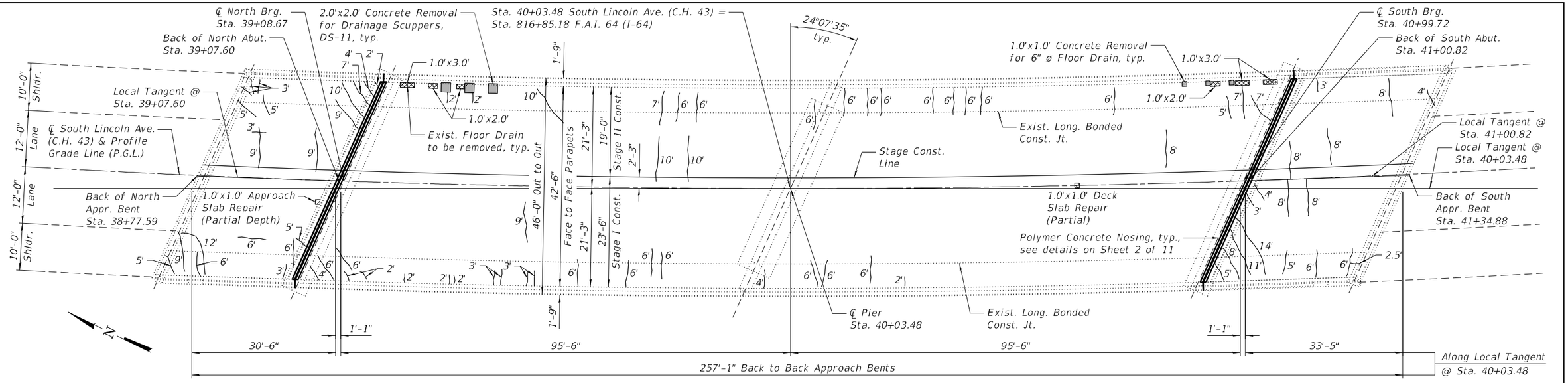

PLAN

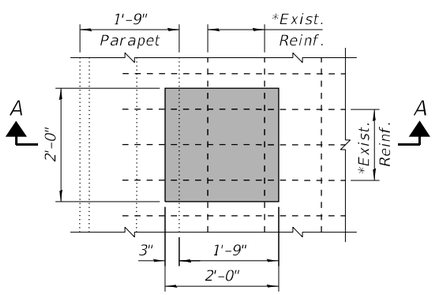

PLAN

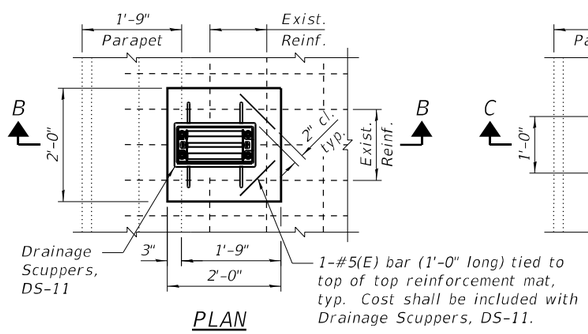

PLAN

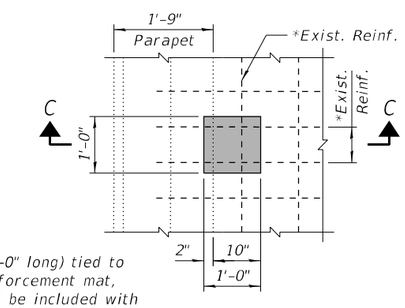

PLAN

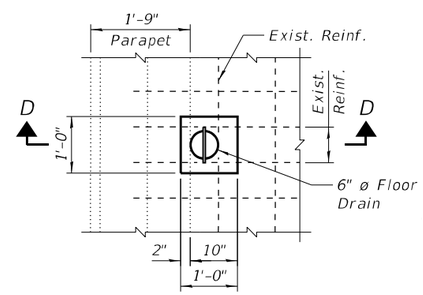

PLAN

LEGEND

- Concrete Removal for Scupper or Floor Drain Placement
- Approach Slab Repair (Partial Depth)
- Deck Slab Repair (Full Depth, Type I)
- Deck Slab Repair (Partial)
- L.F. Epoxy Crack Injection

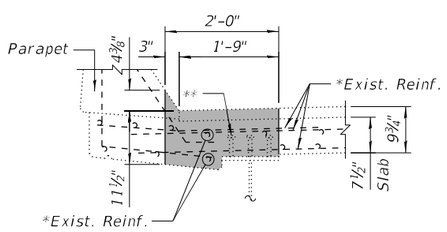

SECTION A-A

REMOVAL FOR DRAINAGE SCUPPERS

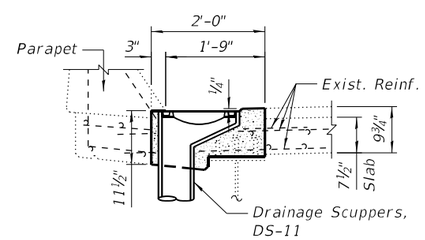

SECTION B-B

REPLACEMENT FOR DRAINAGE SCUPPERS

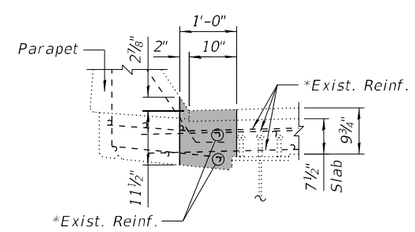

SECTION C-C

REMOVAL FOR FLOOR DRAINS

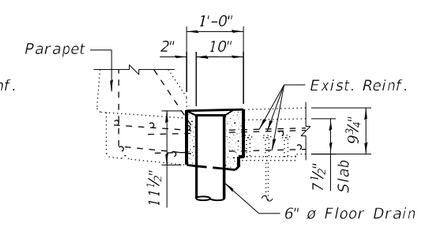

SECTION D-D

REPLACEMENT FOR FLOOR DRAINS

NOTES:

1.) *Existing reinforcement extending into the removal area shall be cut as necessary or cleaned, straightened and incorporated into the new construction. Cost shall be included with Concrete Removal.

2.) Any reinforcement bars that are damaged during concrete removal shall be replaced with an approved bar splicer or anchorage system. Cost shall be included with Concrete Removal.

3.) **Existing shear studs shall be cut as necessary to allow placement of the new drainage scupper.

BILL OF MATERIAL

	ITEM	UNIT	TOTAL
	Concrete Removal	Cu. Yd.	1.1
	Epoxy Crack Injection	Foot	465
***	Approach Slab Repair (Partial Depth)	Sq. Yd.	2
***	Deck Slab Repair (Full Depth, Type I)	Sq. Yd.	5
***	Deck Slab Repair (Partial)	Sq. Yd.	2

NOTES:

1.) Any repairs to the driving surface that cannot be completed and fully cured by the end of a daytime closure shall be protected by a steel plate that has been secured through the deck by threaded rods or bolts. All exposed edges of the plates, rods, bolts, and nuts that extend above the driving surface shall be ground smooth. Holes drilled through the deck for purpose of securing the steel plate shall be repaired with an Epoxy Bonding Compound in accordance with Section 590 of the Standard Specifications. All costs associated with protection of incomplete repairs will not be paid for separately, but shall be included in the cost of the work for which is required.

2.) The area of Approach Slab Repair (Partial Depth) shown at the North approach slab is estimated based on a field inspection conducted in September 2023. All other repair areas shown are estimated based on field inspections conducted in November 2022. The actual repair areas required shall be verified according to the special provisions.

3.) Full depth deck slab repair areas shown at existing floor drains shall include removal of the existing floor drains, plus any deteriorated concrete surrounding the drains. Removal of the floor drains and deteriorated concrete surrounding them shall be included in the cost of Deck Slab Repair (Full Depth, Type I).

4.) ***Quantities displayed in the Bill of Material with units of Sq. Yd. have been increased beyond the areas indicated in the Plan views and Sections shown on this sheet in order to provide a minimum combined total of 5 Sq. Yd. between S.N. 082-0181 and S.N. 082-0344.

5.) Work on the bridge deck shall be coordinated with lane closures under the bridge on I-64, in order to eliminate exposure of traffic to falling debris. All costs associated with protection of traffic below the bridge will not be paid for separately, but shall be included in the cost of the work for which it is required.

6.) Concrete Sealer shall be applied according to Section 587 of the Standard Specifications to the entire existing top surface of the bridge deck and approach slabs; and the existing top and inside vertical faces of the parapets, end posts, and wings.

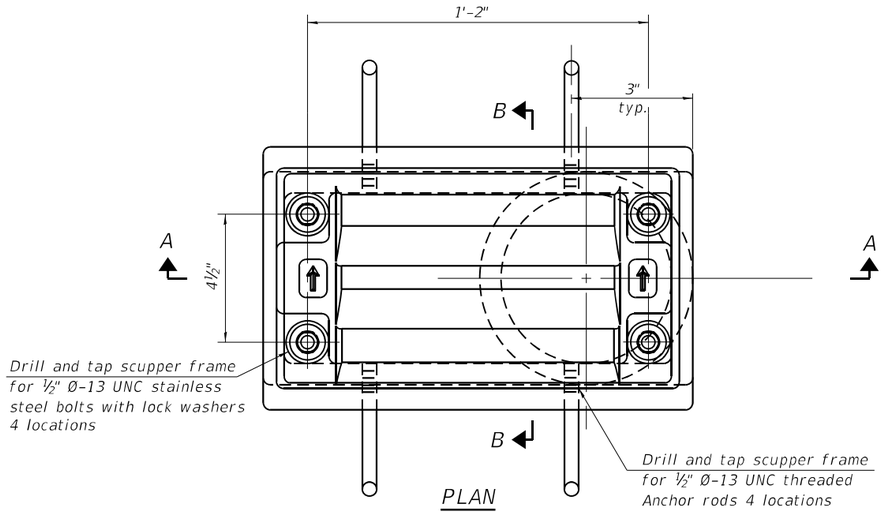

PLAN

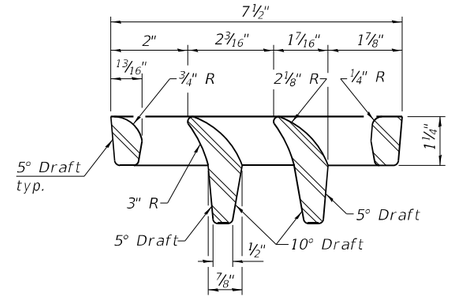

VANE GRATE DETAIL

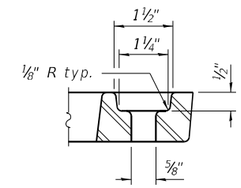

GRATE BOLT HOLE DETAIL

Notes:

All cast iron parts shall be gray iron conforming to the requirements of AASHTO M105, Class 35B and AASHTO M306.

Bolts, anchor rods, nuts and washers shall be according to ASTM A307 and shall be galvanized according to AASHTO M232. As an alternate stainless steel may be used.

Stainless steel hardware shall be according to Article 1006.29(d) of the Standard Specifications.

Structural steel weldments of equal sections and of the same configuration may be substituted for the cast iron scupper frames and downspouts; however, the scupper grates shall remain cast iron. Fillet or full penetration welds shall be used for the weldments. Details shall be submitted to the Engineer for approval.

Structural steel scupper frames and downspouts, when utilized, shall be galvanized according to AASHTO M111.

As an alternate, fiberglass may be used for downspouts according to ASTM D2996 with a short-time rupture strength hoop tensile stress of 30,000 psi min. in lieu of the cast iron or structural steel.

Exterior surfaces of downspouts and exterior exposed surfaces of the scupper frame below deck shall be treated as specified on sheet 2 of 11.

The Contractor shall take appropriate measures to assure that Protective Coat is not applied to the scupper.

Cost of the grate, frame, downspout, anchor rods, nuts and washers including complete installation of the scupper shall be paid for at the contract unit price for Drainage Scuppers, DS-11.

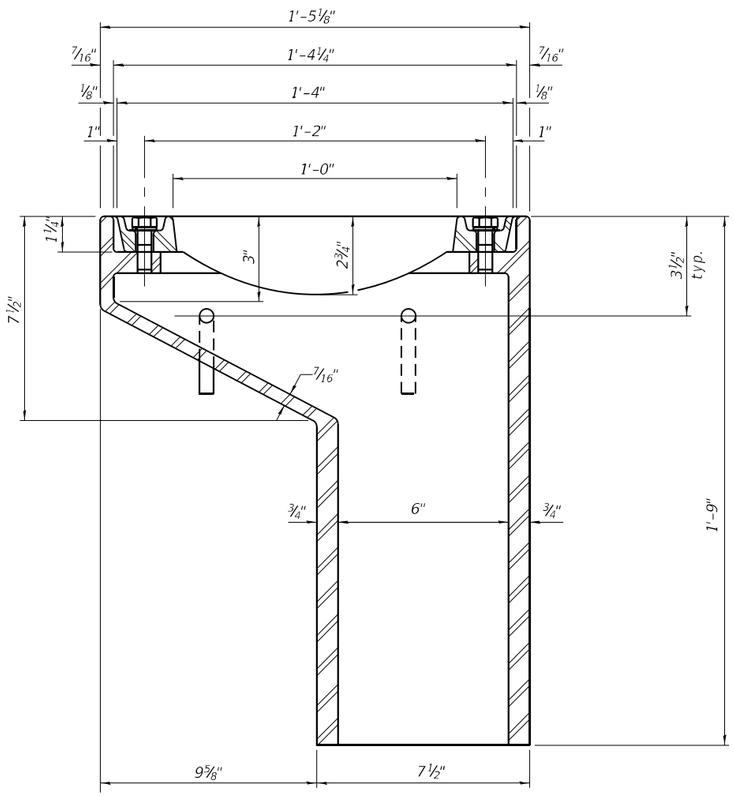

SECTION A-A

See sheet 4 of 11 for scupper location relative to parapet.

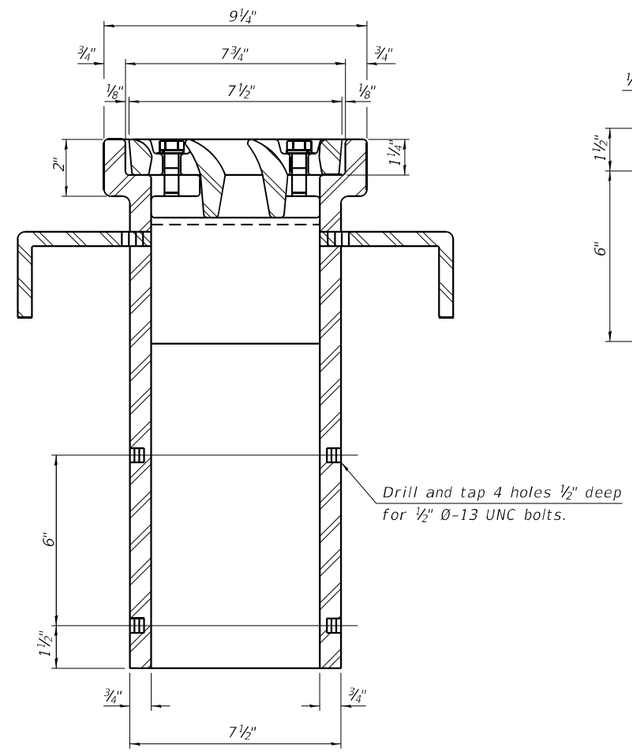

SECTION B-B

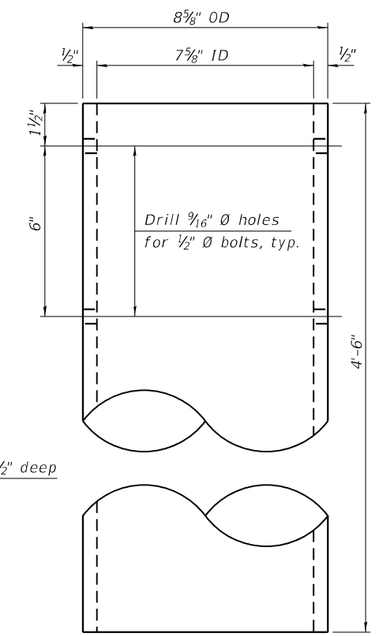

DOWNSPOUT

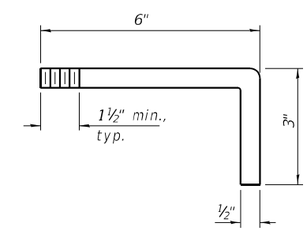

ANCHOR ROD DETAIL

BILL OF MATERIAL

ITEM	UNIT	QUANTITY
Drainage Scuppers, DS-11	Each	3

DS-11 2-1-2023

Farnsworth GROUP		DESIGNED - DJM	REVISED
		CHECKED - VPT	REVISED
		DRAWN - DJM	REVISED
	DATE - 09/12/2024	CHECKED - VPT	REVISED

STATE OF ILLINOIS
DEPARTMENT OF TRANSPORTATION

DRAINAGE SCUPPERS, DS-11
STRUCTURE NO. 082-0181

SHEET NO. 5 OF 11 SHEETS

F.A.I. RTE.	SECTION	COUNTY	TOTAL SHEETS	SHEET NO.
64	82-7WRS-2	ST. CLAIR	691	462
		CONTRACT NO. 76K74		
	ILLINOIS			

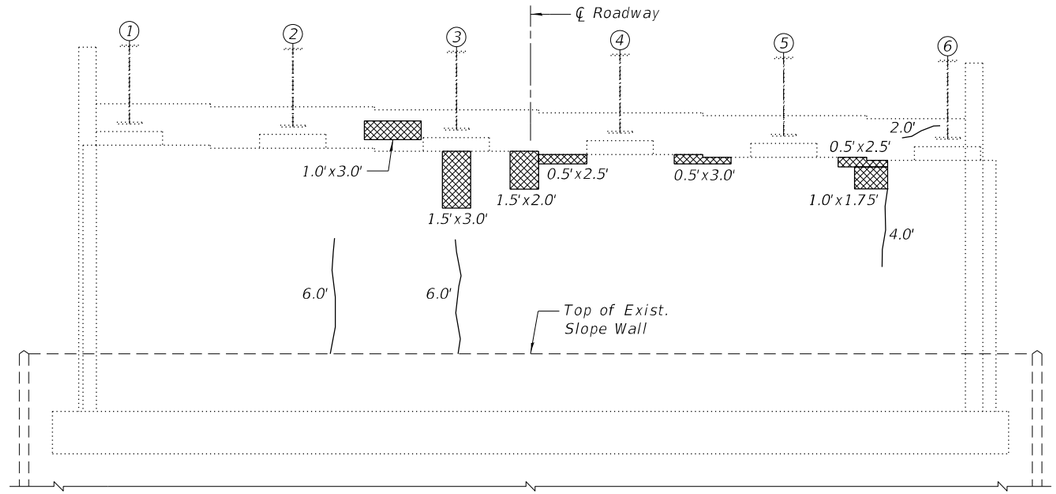

NORTH ABUTMENT ELEVATION

(Looking North)

BILL OF MATERIAL

ITEM	UNIT	TOTAL
Concrete Sealer	Sq. Ft.	525
Epoxy Crack Injection	Foot	26
Structural Repair Of Concrete (Depth Equal To Or Less Than 5 Inches)	Sq. Ft.	27

LEGEND

Structural Repair of Concrete (Depth Equal to or Less than 5 Inches)

L.F. Epoxy Crack Injection

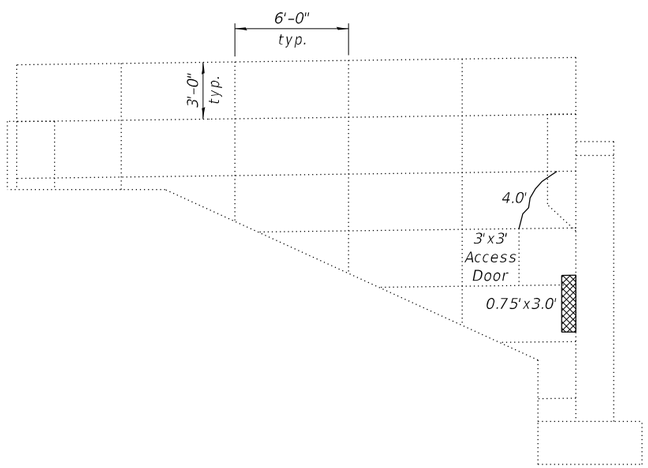

WEST CURTAIN WALL ELEVATION

(Looking East)

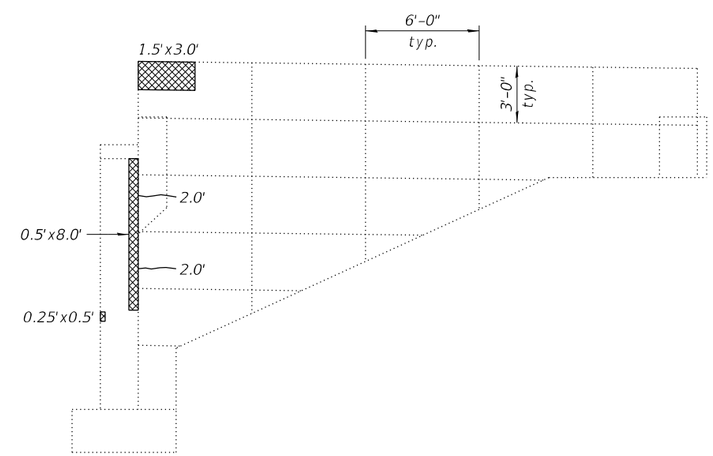

EAST CURTAIN WALL ELEVATION

(Looking West)

NOTES:

1.) The repair areas shown are estimated based on field inspections conducted in November 2022. The actual repair areas required shall be verified according to the special provisions.

2.) Concrete Sealer shall be applied according to Section 587 of the Standard Specifications to exposed surface of proposed concrete repairs on the abutment and wingwalls, and the traffic face of the existing abutment surface.

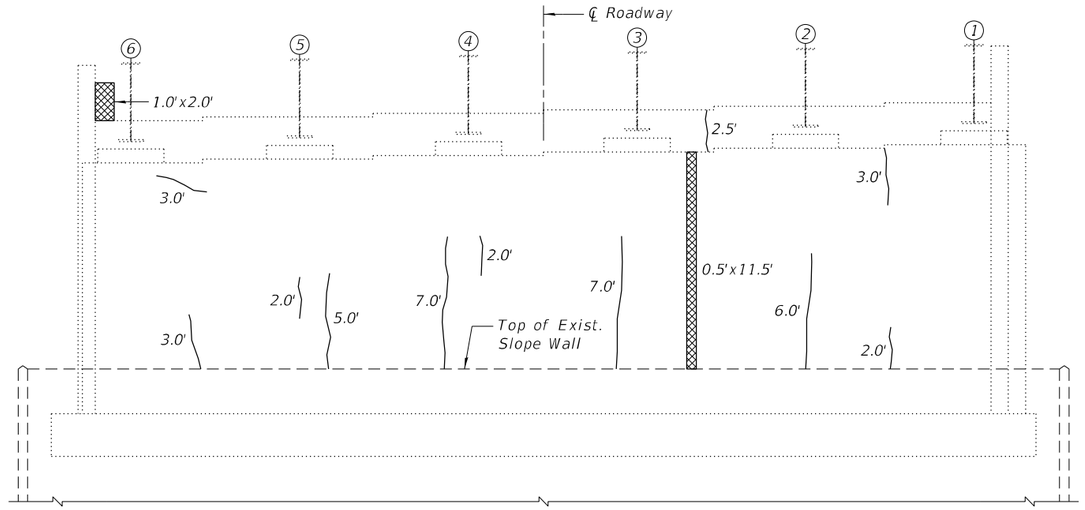

SOUTH ABUTMENT ELEVATION

(Looking South)

BILL OF MATERIAL

ITEM	UNIT	TOTAL
Concrete Sealer	Sq. Ft.	573
Epoxy Crack Injection	Foot	55
Structural Repair Of Concrete (Depth Equal To Or Less Than 5 Inches)	Sq. Ft.	9

LEGEND

Structural Repair of Concrete (Depth Equal to or Less than 5 Inches)

L.F. Epoxy Crack Injection

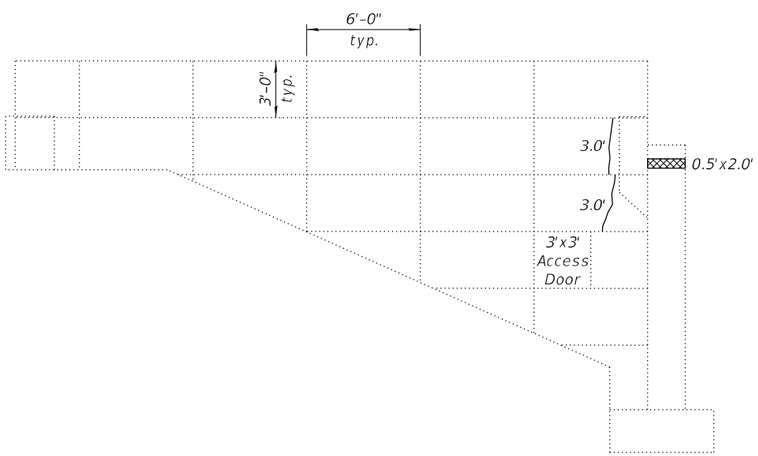

EAST CURTAIN WALL ELEVATION

(Looking West)

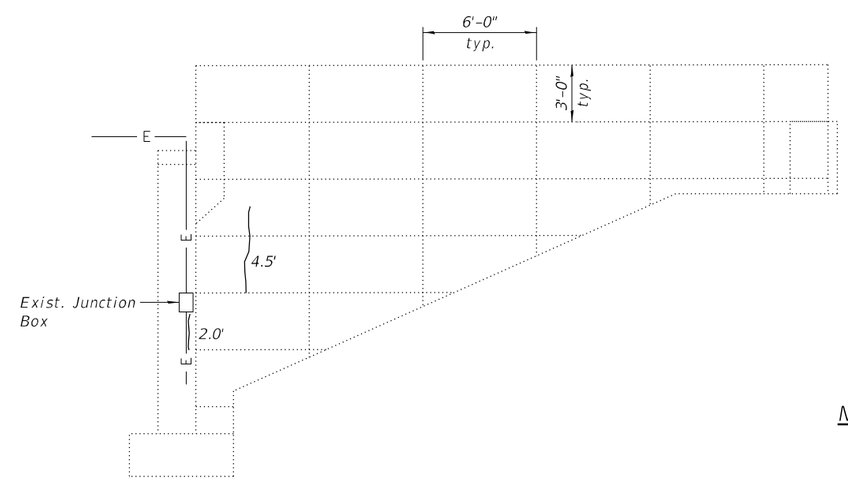

WEST CURTAIN WALL ELEVATION

(Looking East)

NOTES:

1.) The repair areas shown are estimated based on field inspections conducted in November 2022. The actual repair areas required shall be verified according to the special provisions.

2.) Concrete Sealer shall be applied according to Section 587 of the Standard Specifications to exposed surface of proposed concrete repairs on the abutment and wingwalls, and the traffic face of the existing abutment surface.

3.) Existing junction box and electrical conduit shall be removed, if necessary, to perform concrete repairs, and reinstalled. Cost included with Structural Repair of Concrete (Depth Equal to or Less Than 5 Inches).

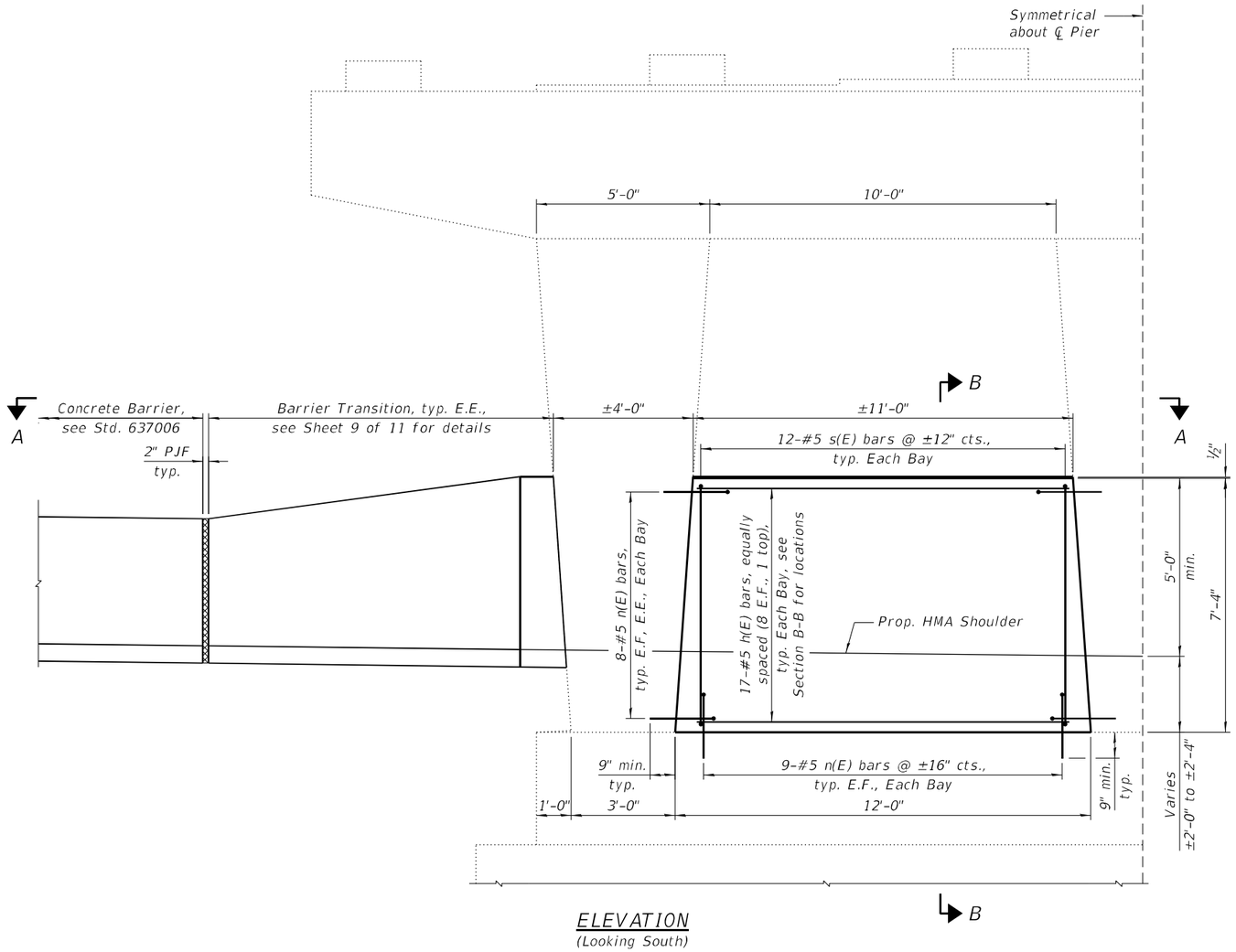

ELEVATION
(Looking South)

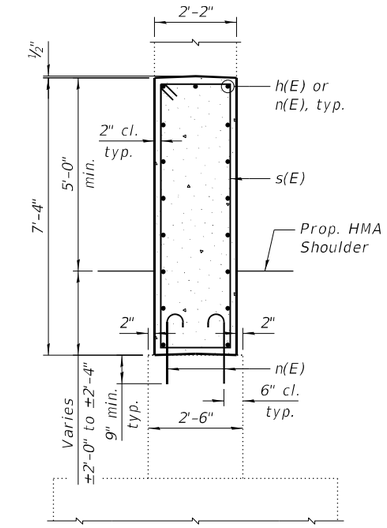

SECTION B-B

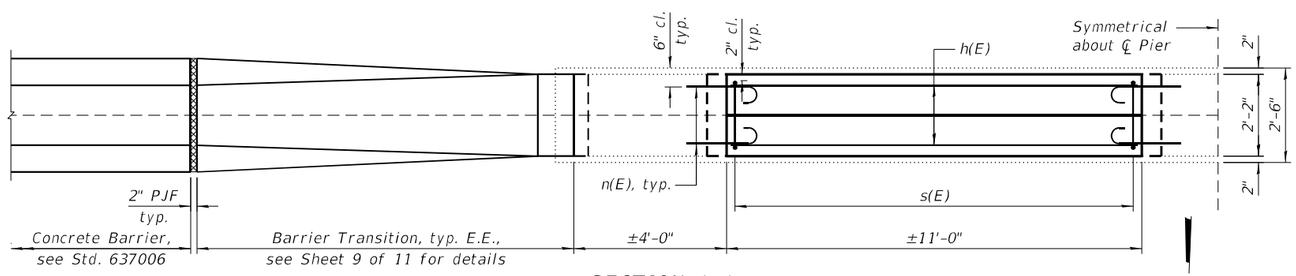

SECTION A-A

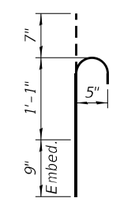

BAR n(E)

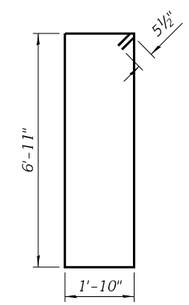

BAR s(E)

BILL OF MATERIAL

Bar	No.	Size	Length	Shape
h(E)	34	#5	10'-8"	
n(E)	100	#5	2'-5"	
s(E)	24	#5	18'-5"	

Item	Unit	Quantity
Concrete Structures	Cu. Yd.	13.5
Reinforcement Bars, Epoxy Coated	Pound	1,100
Concrete Sealer	Sq. Ft.	277

NOTES:

1.) Drill & epoxy grout #5 n(E) bars 9" min. into existing concrete according to Section 584 of the Standard Specifications.
2.) Concrete Sealer shall be applied according to Section 587 of the Standard Specifications to exposed surface of proposed pier crashwall extensions.
3.) E.F. denotes Each Face and E.E. denotes Each End.

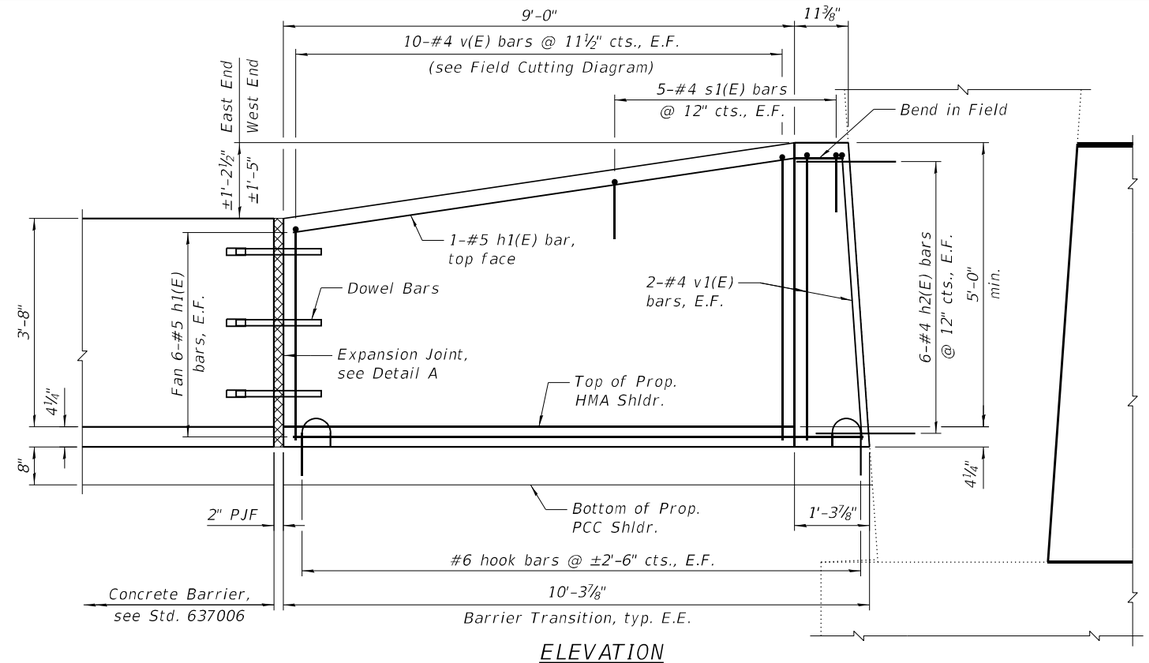

ELEVATION

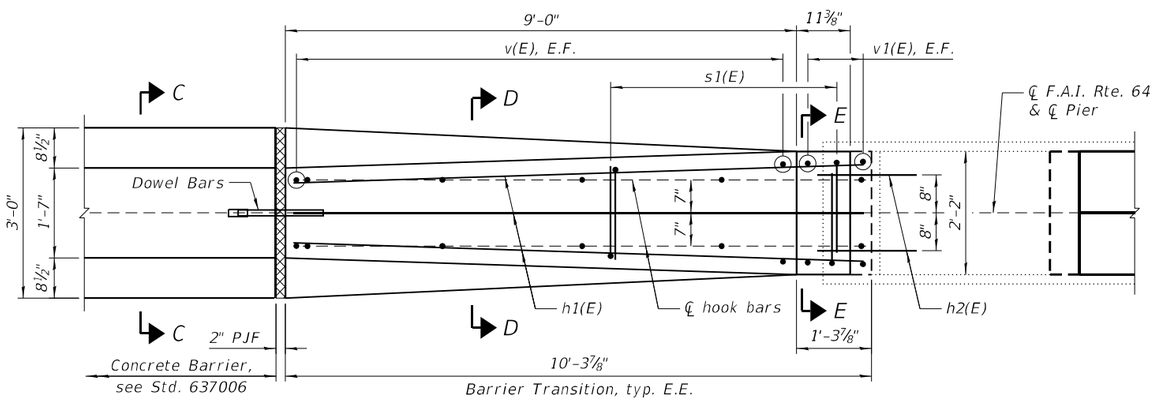

PLAN

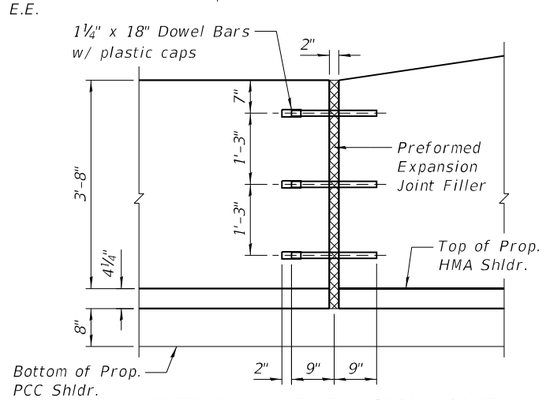

DETAIL A - EXPANSION JOINT

(See Std. 637006)

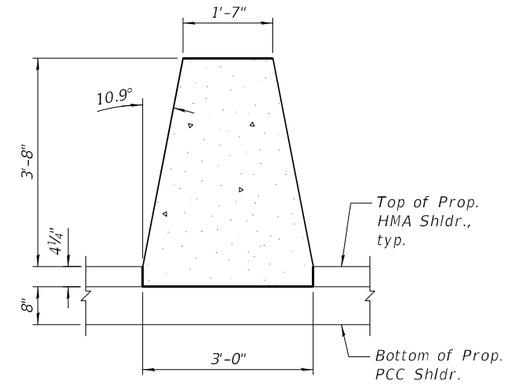

SECTION C-C

(See Std. 637006)

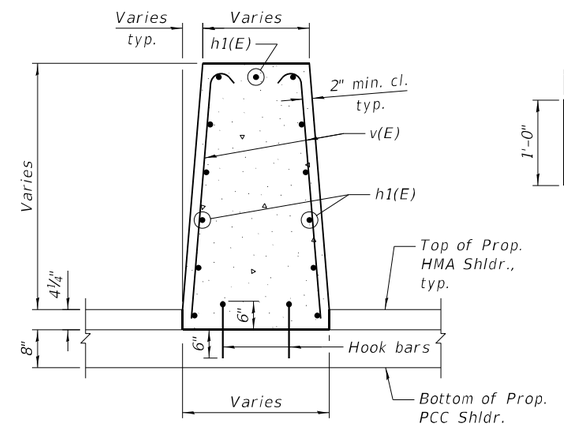

SECTION D-D

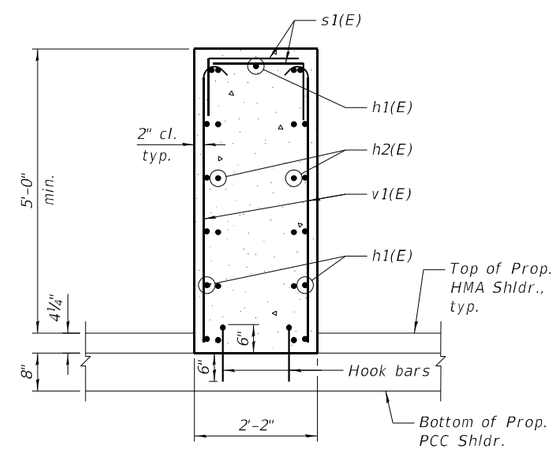

SECTION E-E

BILL OF MATERIAL

(Two Barrier Transitions)

Bar	No.	Size	Length	Shape
h1(E)	26	#5	9'-9"	
h2(E)	24	#4	1'-9"	
s1(E)	20	#4	2'-7"	
v(E)	20	#4	9'-4"	
v1(E)	8	#4	5'-5"	

Item	Unit	Quantity
Concrete Structures	Cu. Yd.	7.9
Reinforcement Bars, Epoxy Coated	Pound	490
Concrete Sealer	Sq. Ft.	216

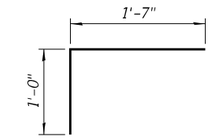

BAR s1(E)

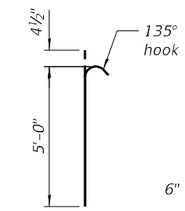

BAR v1(E)

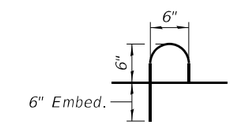

HOOK BAR DETAIL

(See Std. 637006)

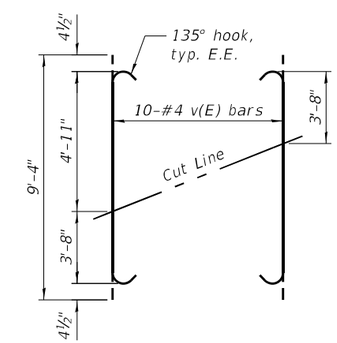

FIELD CUTTING DIAGRAM

Order v(E) bars full length. Cut as shown and use remainder of bars in opposite face.

NOTES:

1.) Drill & epoxy grout #4 h2(E) bars 9" min. into existing concrete according to Article 584 of the Standard Specifications.
2.) The cost of the expansion joint shall be included with Concrete Structures.
3.) The cost of the hook bars shall be included with Concrete Structures.
4.) Concrete Sealer shall be applied according to Section 587 of the Standard Specifications to exposed surface of proposed barrier transitions.
5.) E.F. denotes Each Face and E.E. denotes Each End.
6.) See Sheet 1 of 11 for location of Barrier Transitions.

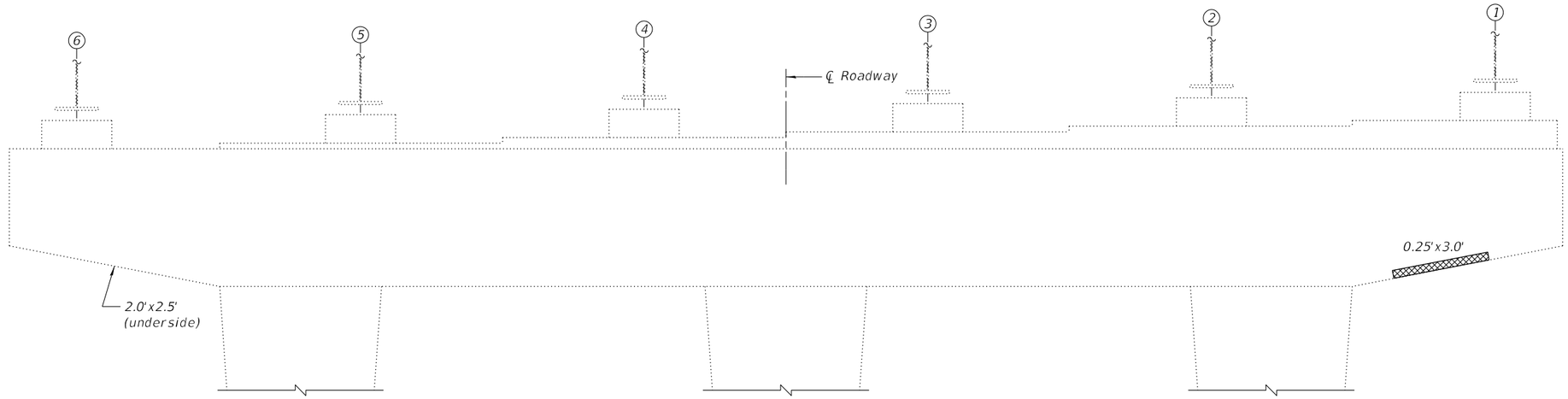

PARTIAL PIER ELEVATION

(Looking South)

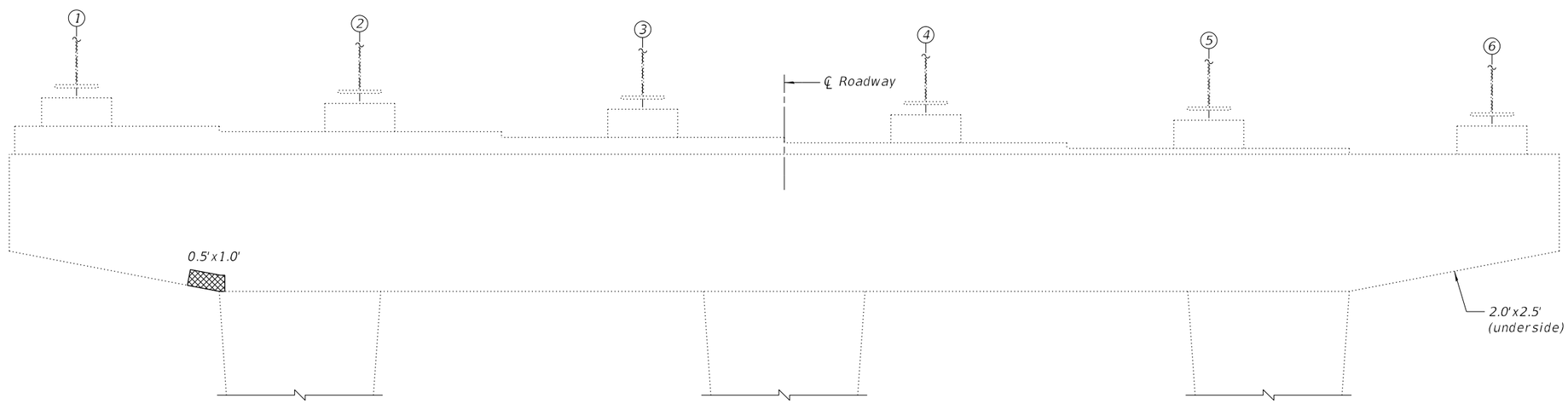

PARTIAL PIER ELEVATION

(Looking North)

BILL OF MATERIAL

ITEM	UNIT	TOTAL
Concrete Sealer	Sq. Ft.	710
Structural Repair Of Concrete (Depth Equal To Or Less Than 5 Inches)	Sq. Ft.	11

NOTES:

1.) The repair areas shown are estimated based on field inspections conducted in November 2022. The actual repair areas required shall be verified according to the special provisions.

2.) Concrete Sealer shall be applied according to Section 587 of the Standard Specifications to all exposed faces of the pier repairs, and also on the traffic faces of the existing pier surfaces.

LEGEND

Structural Repair of Concrete (Depth Equal to or Less than 5 Inches)

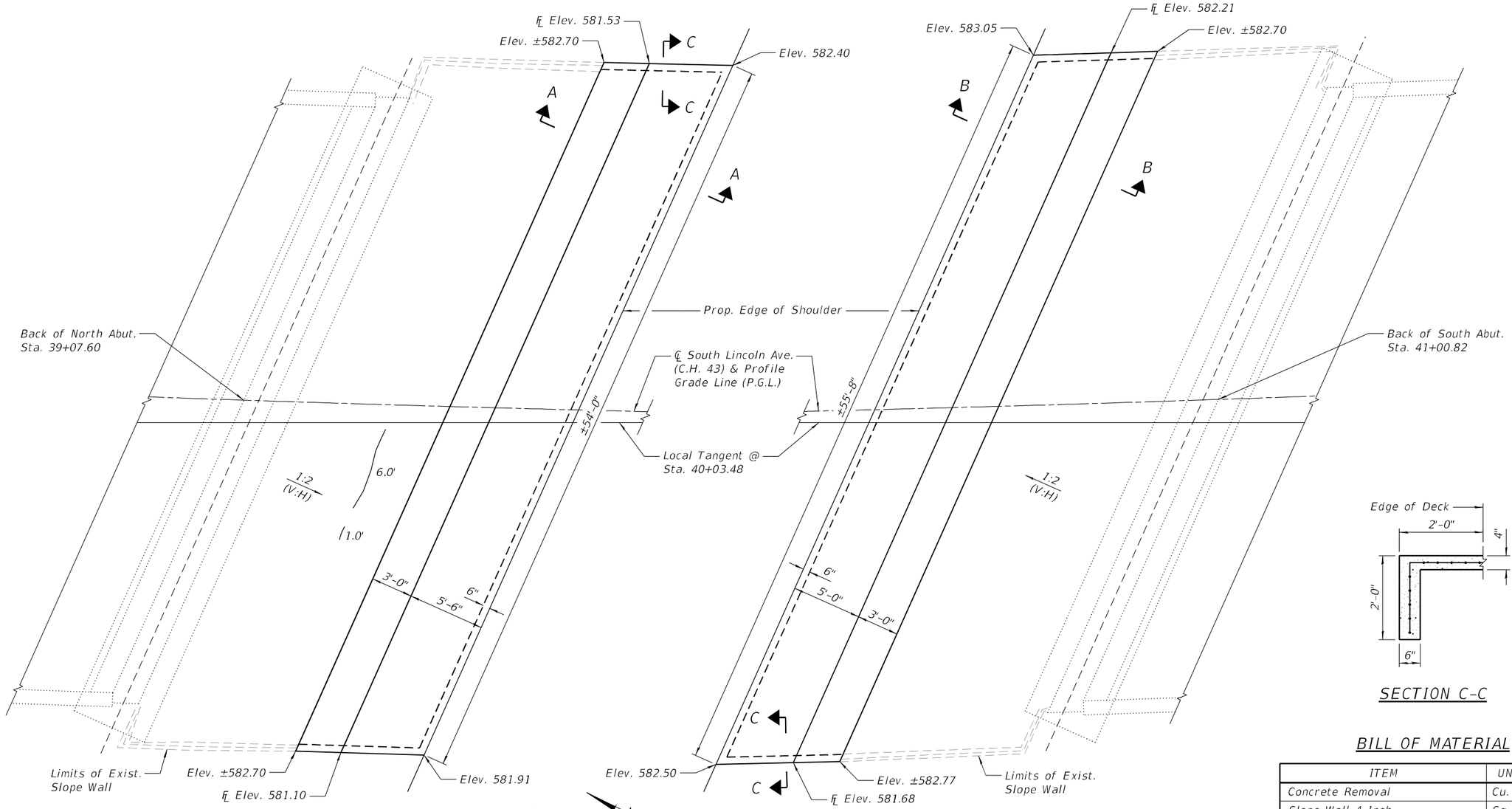

PLAN

SECTION C-C

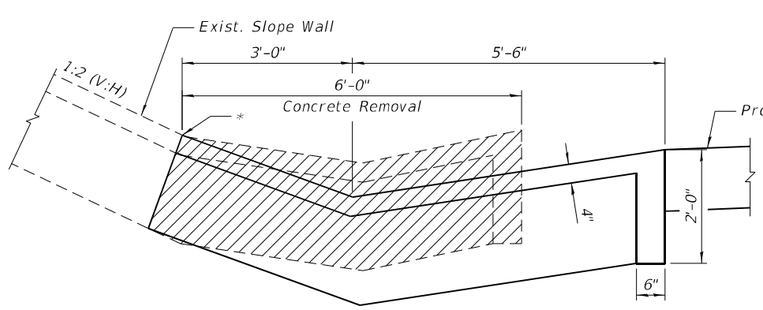

SECTION A-A

*Match Exist. Slope Wall Elevation, typ.

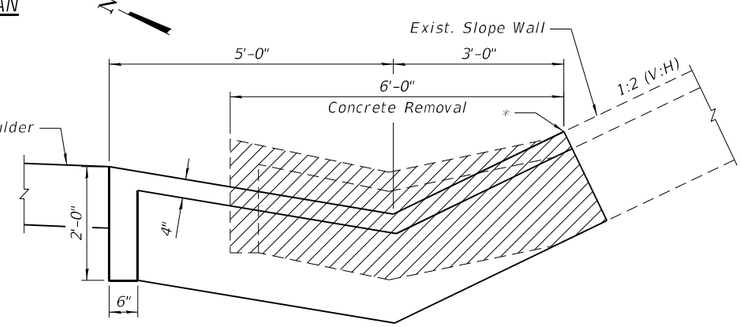

SECTION B-B

*Match Exist. Slope Wall Elevation, typ.

BILL OF MATERIAL

ITEM	UNIT	TOTAL
Concrete Removal	Cu. Yd.	12.4
Slope Wall 4 Inch	Sq. Yd.	106
Epoxy Crack Injection	Foot	7

LEGEND

Concrete Removal for Slope Wall

L.F. Epoxy Crack Injection

NOTES:

1.) The repair areas shown are estimated based on field inspections conducted in November 2022. The actual repair areas required shall be verified according to the special provisions.

2.) Slope wall shall be reinforced with welded wire fabric, 6 in. x 6 in. - W4.0 x W4.0, weighing 58 lbs. per 100 sq. ft.

Existing Structure: S.N. 082-0344 was constructed in 2001 as Section 82-7HB. The superstructure consists of a two-span continuous composite steel plate girder with a 7⅝" cast-in-place concrete deck, with a full length raised concrete median. The substructure consists of reinforced concrete spill-thru abutments supported by concrete piles and a multiple column hammerhead pier supported by a spread footing with driven H-Piles. The back-to-back of abutments length measures 280'-2¼" and the out-to-out of deck width measures 68'-6⅞". The span lengths are both 136'-1⅞". The structure is skewed 26°31'40" left forward. The structure will be closed to traffic for construction, using weekend closures.

No Salvage.

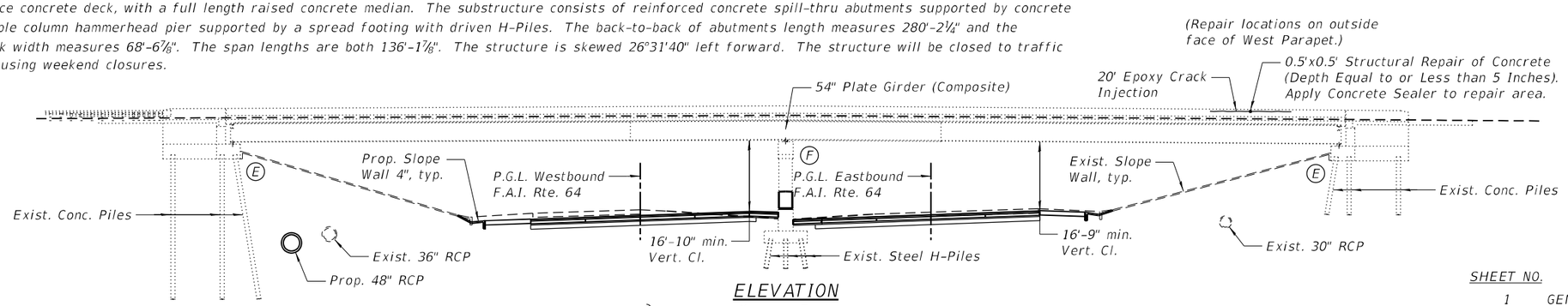

ELEVATION
(Looking East)

INDEX OF SHEETS

EXISTING CURVE DATA
F.A.I. 64 (I-64)

Δ = 61°53'09" (LT)
D = 1°15'00"
R = 4,583.66'
T = 2,747.93'
L = 4,950.87'
E = 760.59'
e = Existing
T.R. = Existing
P.C. Sta. = 733+43.81
P.I. Sta. = 760+91.74
P.T. Sta. = 782+94.67
S.E. = 3.5%

NOTE:
See Signing Plans for any modifications required to the bridge mounted sign structures, and for replacement signs.

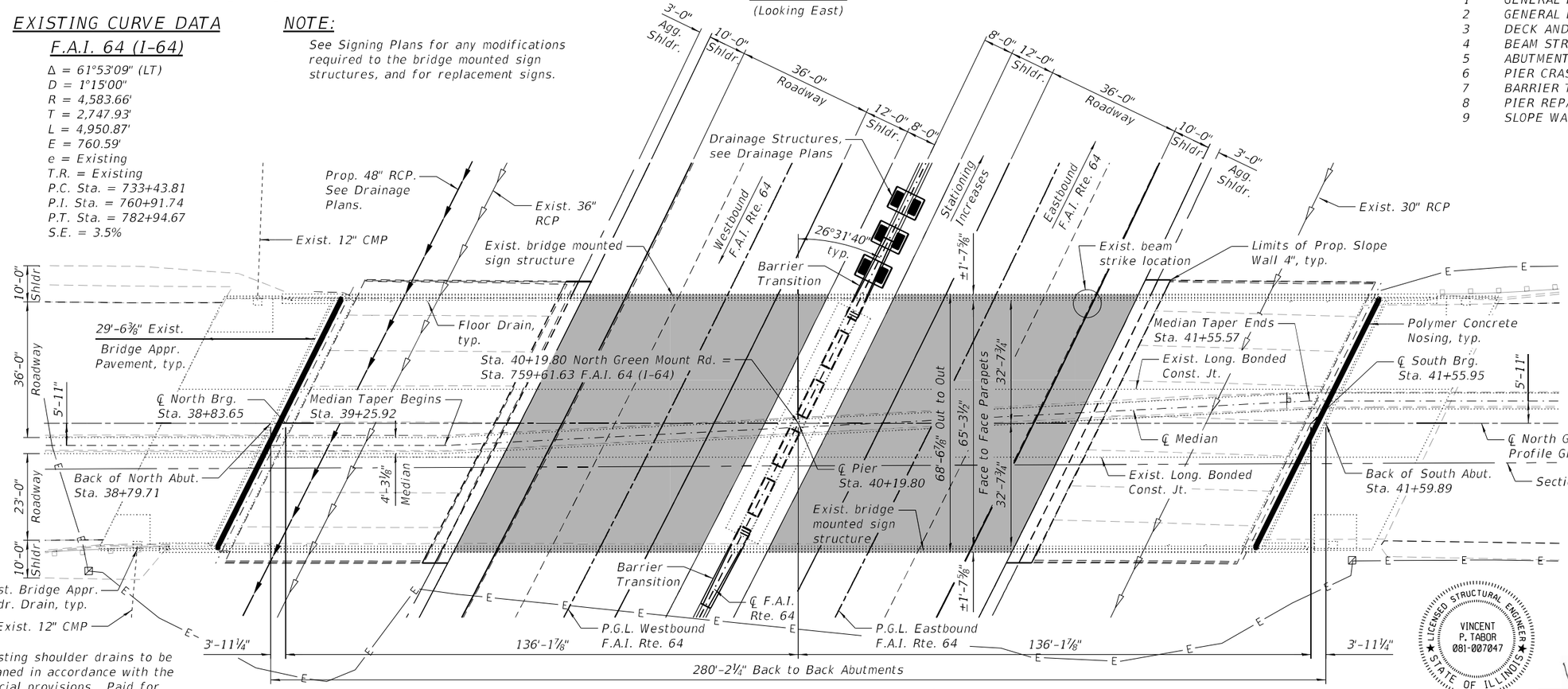

*Existing shoulder drains to be cleaned in accordance with the special provisions. Paid for as Cleaning Existing Inlets.

PLAN

LEGEND
Limits of Protective Shield

DESIGN SPECIFICATIONS
2002 AASHTO Standard Specifications for Highway Bridges

EXISTING DESIGN STRESSES
FIELD UNITS (2000):
f'c = 3,500 psi
fy = 60,000 psi (Reinforcement)
fy = 36,000 psi (Structural Steel)
fy = 50,000 psi (Structural Steel)

PROPOSED DESIGN STRESSES
FIELD UNITS:
f'c = 3,500 psi
f'c = 4,000 psi (Superstructure)
fy = 60,000 psi (Reinforcement)

LOADING HS20-44
Allow 50#/sq. ft. for future wearing surface.

SCOPE OF WORK
1.) The structure will be closed to traffic for construction, using weekend closures.
2.) Replace the existing expansion joints with Preformed Joint Seal.
3.) Repair the concrete deck and approach slab.
4.) Pier crashwall modifications and median barrier transitions.
5.) Substructure repairs.
6.) Reconfigure slope walls, including gutter removal and replacement.
7.) Beam straightening at location of exterior beam strike.
8.) Paint beam ends (including bearings and end diaphragms).

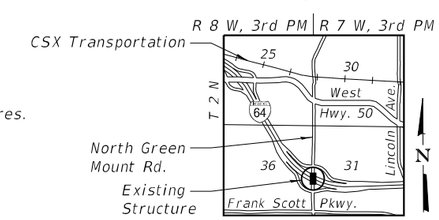

LOCATION SKETCH

LICENSED STRUCTURAL ENGINEER VINCENT P. TABOR 081-007047 STATE OF ILLINOIS

Vincent P. Tabor 03/19/2025
Vincent P. Tabor Date
Licensed Structural Engineer
State of Illinois No. 081-007047
Expires 11/30/2026

NORTH GREEN MOUNT ROAD OVER I-64
F.A.I. RTE. 64 - SEC. 82-7WRS-2
ST. CLAIR COUNTY
STATION 40+19.80
STRUCTURE NO. 082-0344

Farnsworth GROUP

	DESIGNED - DJM	REVISED
	CHECKED - VPT	REVISED
	DRAWN - DJM	REVISED
DATE - 09/12/2024	CHECKED - VPT	REVISED

STATE OF ILLINOIS
DEPARTMENT OF TRANSPORTATION

GENERAL PLAN AND ELEVATION

SHEET NO. 1 OF 9 SHEETS

F.A.I. RTE.	SECTION	COUNTY	TOTAL SHEETS	SHEET NO.
64	82-7WRS-2	ST. CLAIR	691	469
		CONTRACT NO. 76K74		
		ILLINOIS		

TOTAL BILL OF MATERIAL

ITEM	UNIT	TOTAL
Concrete Removal	Cu. Yd.	18.3
Protective Shield	Sq. Yd.	988
Concrete Structures	Cu. Yd.	45.1
Protective Coat	Sq. Yd.	14
Reinforcement Bars, Epoxy Coated	Pound	3,280
Slope Wall 4 Inch	Sq. Yd.	119
Preformed Joint Seal 3"	Foot	152
Concrete Sealer	Sq. Ft.	27,405
Epoxy Crack Injection	Foot	290
Containment And Disposal Of Non-Lead Paint Cleaning Residues No. 1	L. Sum	1
Approach Slab Repair (Partial Depth)	Sq. Yd.	3
Beam Straightening	L. Sum	1
Cleaning And Painting Steel Bridge No. 1	L. Sum	1
Cleaning Existing Inlets	Each	4
Structural Repair Of Concrete (Depth Equal To Or Less Than 5 Inches)	Sq. Ft.	7
Deck Slab Repair (Partial)	Sq. Yd.	3
Polymer Concrete	Cu. Ft.	15

GENERAL NOTES:

1.) Reinforcement bars designated (E) shall be epoxy coated.
2.) Plan dimensions and details relative to the existing structure have been taken from existing plans and are subject to nominal construction variations. The Contractor shall field verify existing dimensions and details affecting new construction and make necessary approved adjustments prior to construction or ordering of materials. Such variations shall not be cause for additional compensation for a change in scope of the work, however, the Contractor will be paid for the quantity actually furnished at the unit price bid for the work.
3.) A protective coat shall be applied to new concrete adjacent to the expansion joints; and to the finished surfaces of all deck, approach slab, median, and inside face of parapet repairs.
4.) The deck surface shall have its final finish tined according to Article 420.09(e)(1) of the Standard Specifications. This final finish will not be measured for payment, but shall be included in the contract unit price for the associated work.
5.) Concrete Sealer shall be applied according to Section 587 of the Standard Specifications to the entire existing top surface of the bridge deck and approach slabs; the existing top and inside vertical faces of the parapets, end posts, and wings; the top and vertical faces of the median; all exposed faces of the abutment, wingwall, and pier repairs; new concrete on pier crashwalls and barrier transitions; and also on the traffic face of the existing abutment and pier surfaces.
6.) Cleaning and painting of the existing structural steel shall be as specified in the special provisions for Cleaning and Painting Existing Steel Structures. All beams, bearings and other structural steel within 5'-0" (measured along the beam) of either side of deck joints shall be cleaned per Near White Blast Cleaning (SSPC-SP10). The exterior surfaces and bottom of the bottom flange of the fascia beams shall be cleaned per Commercial Grade Power Tool Cleaning (SSPC-SP15).
7.) The designated areas cleaned per Near White Blast Cleaning (SSPC-SP10) and per Commercial Grade Power Tool Cleaning (SSPC-SP10) and per Commercial Grade Power Tool Cleaning (SSPC-SP15) shall be painted according to the requirements of Epoxy Mastic Primer/Epoxy Mastic Intermediate Coat/Acrylic Topcoat (EM/EM/AC). The color of the final finish coat shall be Gray, Munsell No. 5B 7/1.
8.) Containment of cleaning residue is required to control nuisance dust. See special provisions.
9.) SSPC QP1 Certification is required for this Contract.
10.) Existing plans were drawn using Metric units. All dimensions in these plans have been converted to U.S. Survey Feet. Existing stationing was placed using Metric units. Proposed stationing is using U.S. Survey Feet. Centerline of Structure Station 11+004.152 (Metric) = Station 40+19.80 (U.S. Survey Feet).
11.) The Contractor may request copies of existing construction plans that are currently on file with the Department. The request shall be in writing with the understanding that any reproduction cost will be at the Contractor's expense at no additional cost to the Department.
12.) The structure will be closed to traffic for construction. Multiple weekend closures may be required in order to complete the work affecting traffic on North Green Mount Road. See the special provision for Traffic Control and Protection (Special), and the Traffic Control plans for additional details.

LEGEND

Concrete Removal for Joint Replacement

NOTE:

Cost of removal of existing joint materials, including but not limited to steel reinforced elastomeric anchor blocks, steel plates, elastomeric membrane, and sealant, will not be paid for separately, but shall be considered as included in the contract unit price for the associated work.

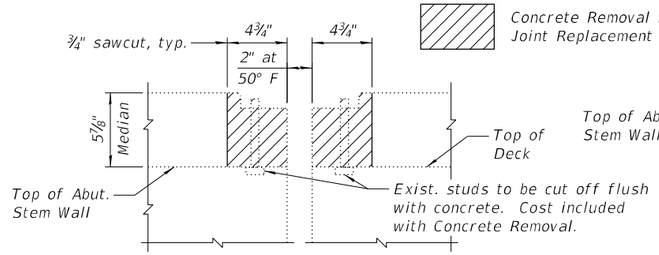

MEDIAN JOINT CONCRETE REMOVAL

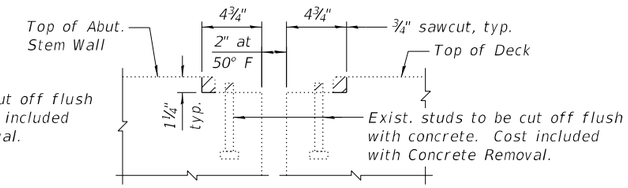

DECK JOINT CONCRETE REMOVAL

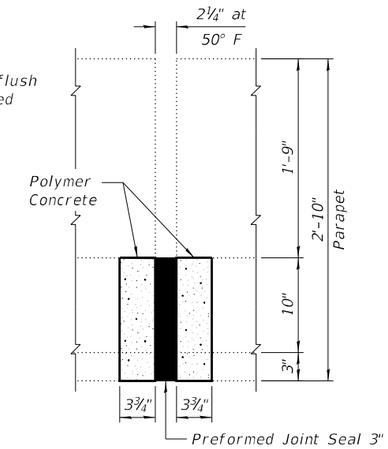

ELEVATION - INSIDE FACE OF PARAPET AT JOINT

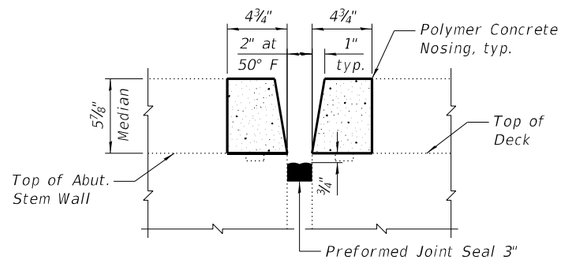

MEDIAN JOINT CONCRETE REPLACEMENT

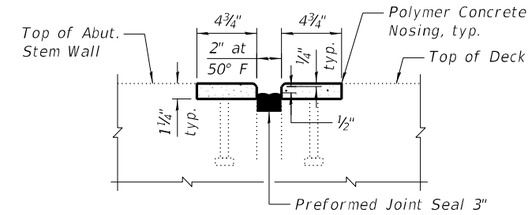

DECK JOINT CONCRETE REPLACEMENT

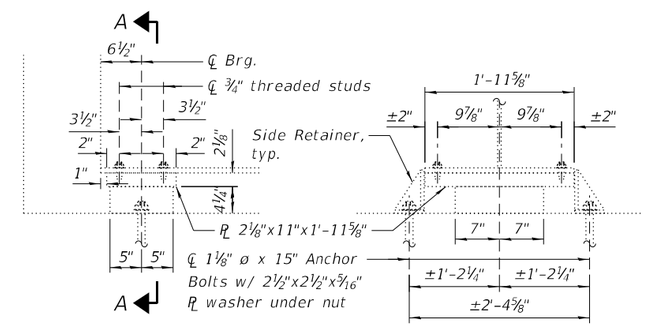

ELEVATION AT ABUTMENTS

SECTION A-A

EXISTING TYPE I ELASTOMERIC EXP. BRG.

For information only, for Cleaning and Painting Steel Bridge.

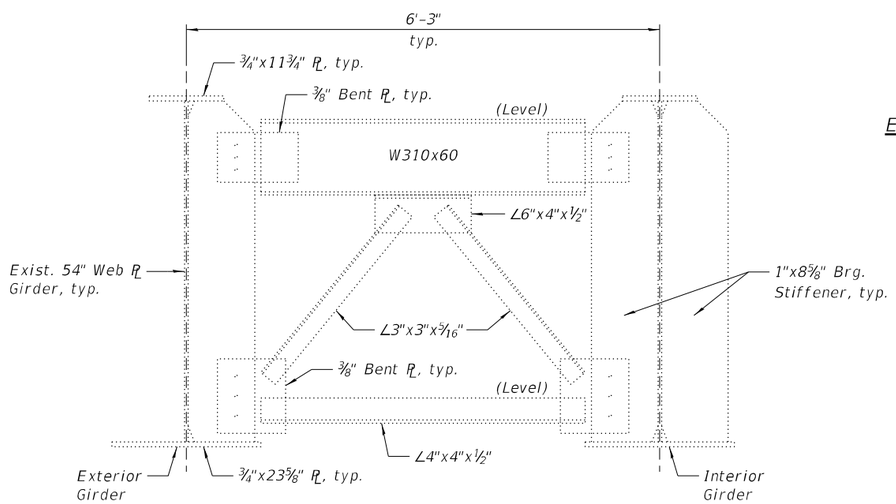

EXISTING END DIAPHRAGM

For information only, for Cleaning and Painting Steel Bridge.

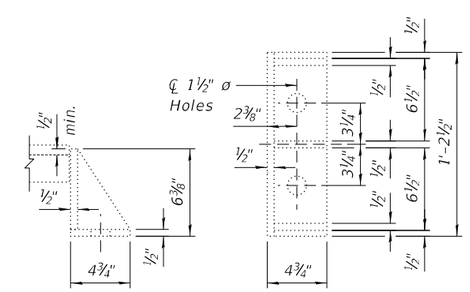

EXISTING SIDE RETAINER

For information only, for Cleaning and Painting Steel Bridge.

Farnsworth GROUP		DESIGNED - DJM	REVISED
		CHECKED - VPT	REVISED
		DRAWN - DJM	REVISED
	DATE - 09/12/2024	CHECKED - VPT	REVISED

STATE OF ILLINOIS
DEPARTMENT OF TRANSPORTATION

GENERAL DATA AND MISCELLANEOUS DETAILS
STRUCTURE NO. 082-0344

SHEET NO. 2 OF 9 SHEETS

F.A.I. RTE.	SECTION	COUNTY	TOTAL SHEETS	SHEET NO.
64	82-7WRS-2	ST. CLAIR	691	470
		CONTRACT NO. 76K74		
	ILLINOIS			

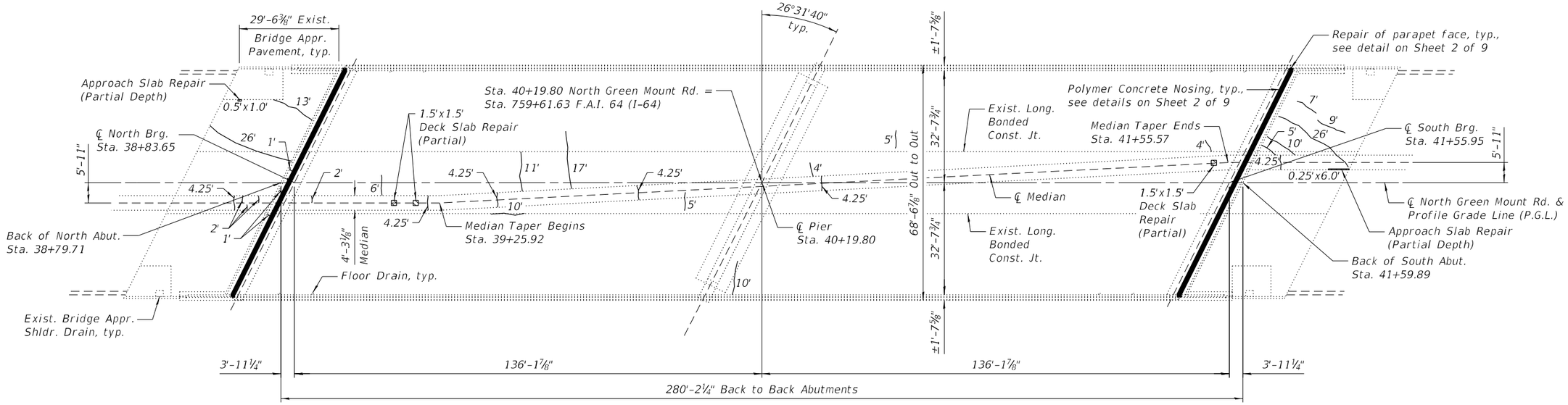

PLAN

N

LEGEND

- Approach Slab Repair (Partial Depth)
- Deck Slab Repair (Partial)
- L.F. Epoxy Crack Injection

NOTES:

1.) The repair areas shown are estimated based on field inspections conducted in November 2022. The actual repair areas required shall be verified according to the special provisions.

2.) *Quantities displayed in the Bill of Material with units of Sq. Yd. have been increased beyond the areas indicated in the Plan view shown on this sheet in order to provide a minimum combined total of 5 Sq. Yd. between S.N. 082-0181 and S.N. 082-0344.

3.) Concrete Sealer shall be applied according to Section 587 of the Standard Specifications to the entire existing top surface of the bridge deck and approach slabs; the existing top and inside vertical faces of the parapets, end posts, and wings; and the top and vertical faces of the median.

4.) Quantity shown for Epoxy Crack Injection includes repair of the parapet identified on Sheet 1 of 9.

BILL OF MATERIAL

	ITEM	UNIT	TOTAL
	Epoxy Crack Injection	Foot	225
*	Approach Slab Repair (Partial Depth)	Sq. Yd.	3
*	Deck Slab Repair (Partial)	Sq. Yd.	3

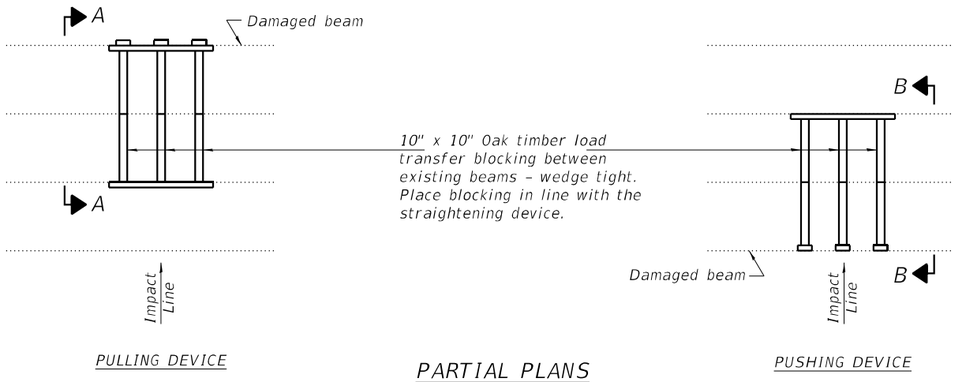

PARTIAL PLANS
SUGGESTED BEAM STRAIGHTENING METHODS

Straightening force shall be maintained on all load transfer blocking during beam straightening.

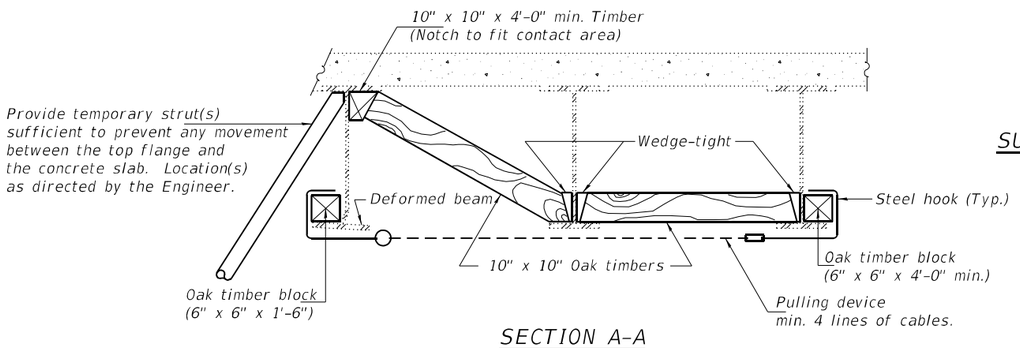

SECTION A-A

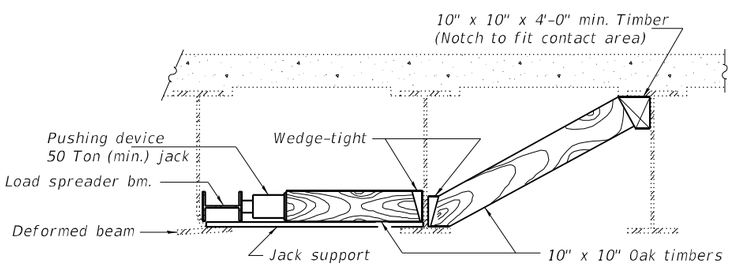

SECTION B-B

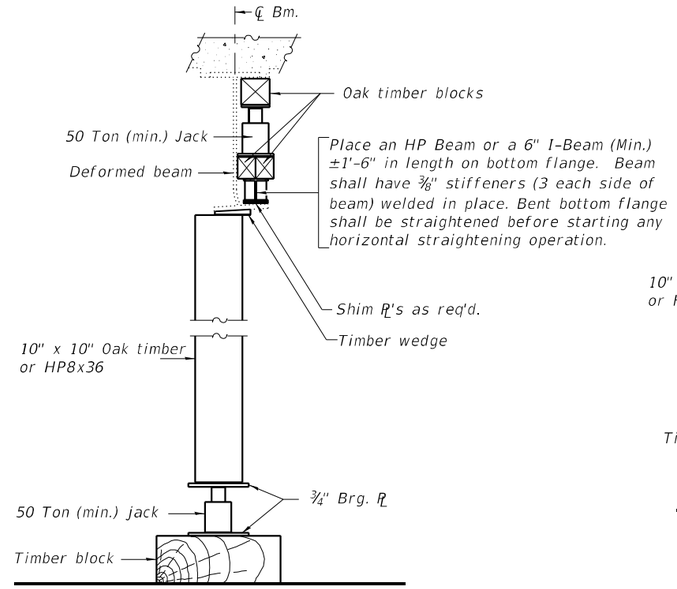

SUGGESTED VERTICAL STRAIGHTENING DETAIL

(To correct flange rotation.)

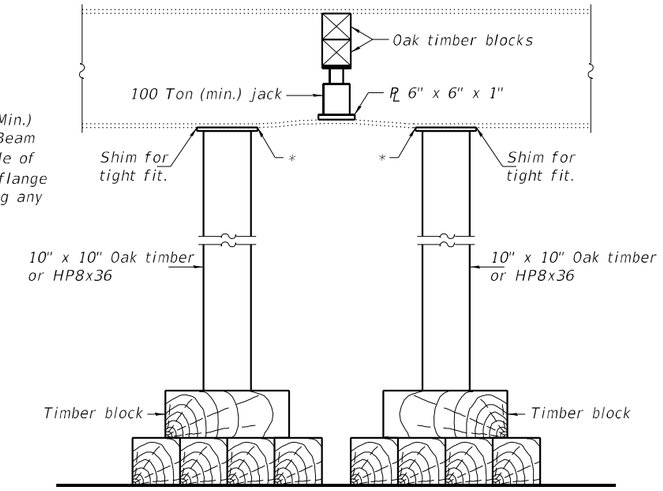

SUGGESTED VERTICAL STRAIGHTENING DETAIL

(To correct localized vertical flange deformations.)

* Edge of plate shall line up with edge of deformation.

Note:
Braces and jack assembly shall be placed on same side of web.
Bent bottom flange shall be straightened before starting any horizontal straightening operations.

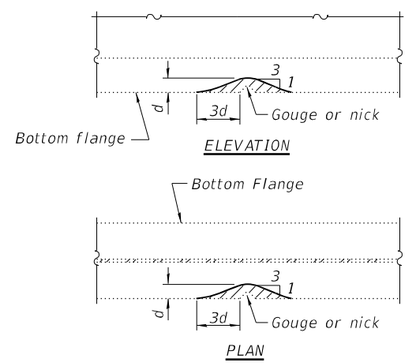

GRINDING DETAIL

Grind existing nicks, gouges and shallow cracks in the damaged beams as detailed. Ground surfaces shall be inspected for cracks using dye penetrant or magnetic particle testing prior to initiating any beam straightening operations. Any cracks that cannot be removed by grinding approximately ¼" deep shall be identified and reported to the Bureau of Bridges and Structures for further disposition. Ground surfaces shall be spot cleaned and painted with an aluminum epoxy mastic primer followed by a finish coat to match the color of the existing beam. Cost of grinding, testing and spot painting included with Beam Straightening.

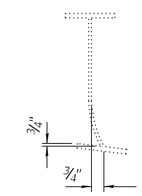

EXISTING DEFORMATION TO BE STRAIGHTENED

(Looking North along Beam No. 11)
(Approximate max. deflections)
Deflected length of beam to be straightened is approximately 10'-0".

REP-1 8-16-2018

Farnsworth GROUP		DESIGNED - DJM	REVISED	STATE OF ILLINOIS DEPARTMENT OF TRANSPORTATION	BEAM STRAIGHTENING DETAILS STRUCTURE NO. 082-0344	F.A.I. RTE.	SECTION	COUNTY	TOTAL SHEETS / SHEET NO.
		CHECKED - VPT	REVISED			64	82-7WRS-2	ST. CLAIR	691 / 472
		DRAWN - DJM	REVISED					CONTRACT NO. 76K74	
	DATE - 09/12/2024	CHECKED - VPT	REVISED		SHEET NO. 4 OF 9 SHEETS		ILLINOIS		

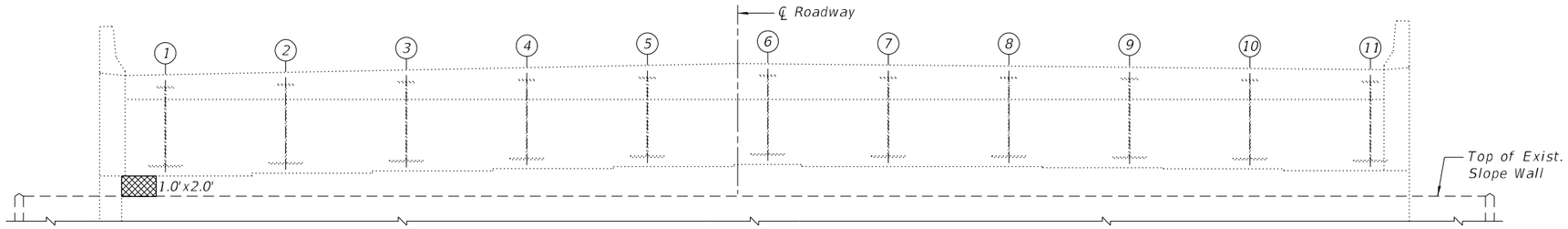

NORTH ABUTMENT ELEVATION

(Looking North)

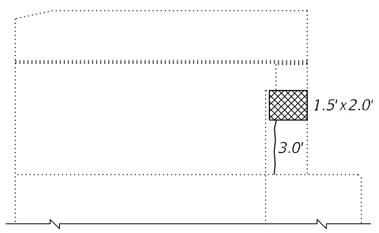

NORTHWEST WINGWALL ELEVATION

(Looking East)

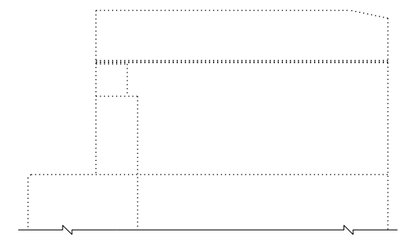

NORTHEAST WINGWALL ELEVATION

(Looking West)

BILL OF MATERIAL

ITEM	UNIT	TOTAL
Concrete Sealer	Sq. Ft.	244
Epoxy Crack Injection	Foot	3
Structural Repair of Concrete (Depth Equal to or Less Than 5 Inches)	Sq. Ft.	5

LEGEND

Structural Repair of Concrete (Depth Equal to or Less than 5 Inches)

L.F. Epoxy Crack Injection

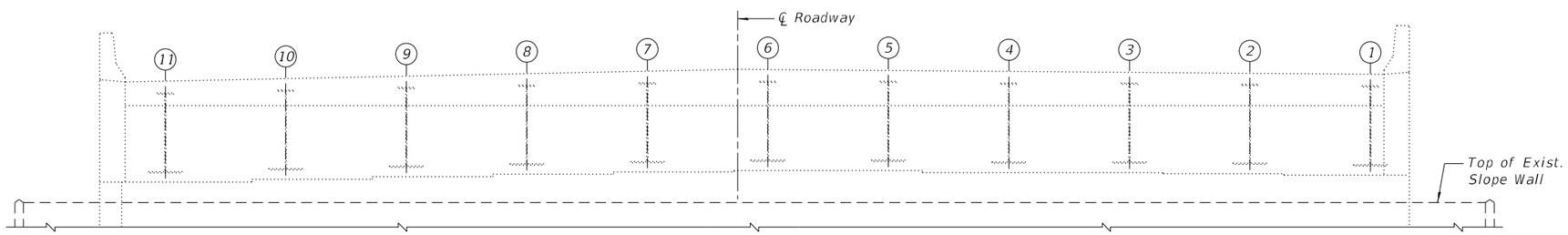

SOUTH ABUTMENT ELEVATION

(Looking South)

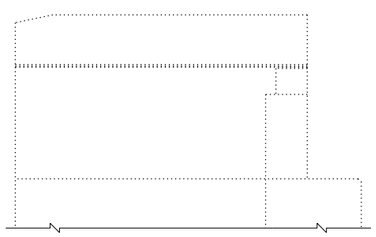

SOUTHEAST WINGWALL ELEVATION

(Looking West)

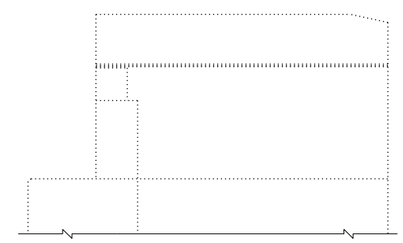

SOUTHWEST WINGWALL ELEVATION

(Looking East)

NOTES:

1.) The repair areas shown are estimated based on field inspections conducted in November 2022. The actual repair areas required shall be verified according to the special provisions.

2.) Concrete Sealer shall be applied according to Section 587 of the Standard Specifications to exposed surface of proposed concrete repairs on the abutment and wingwalls, and the traffic face of the existing abutment surface.

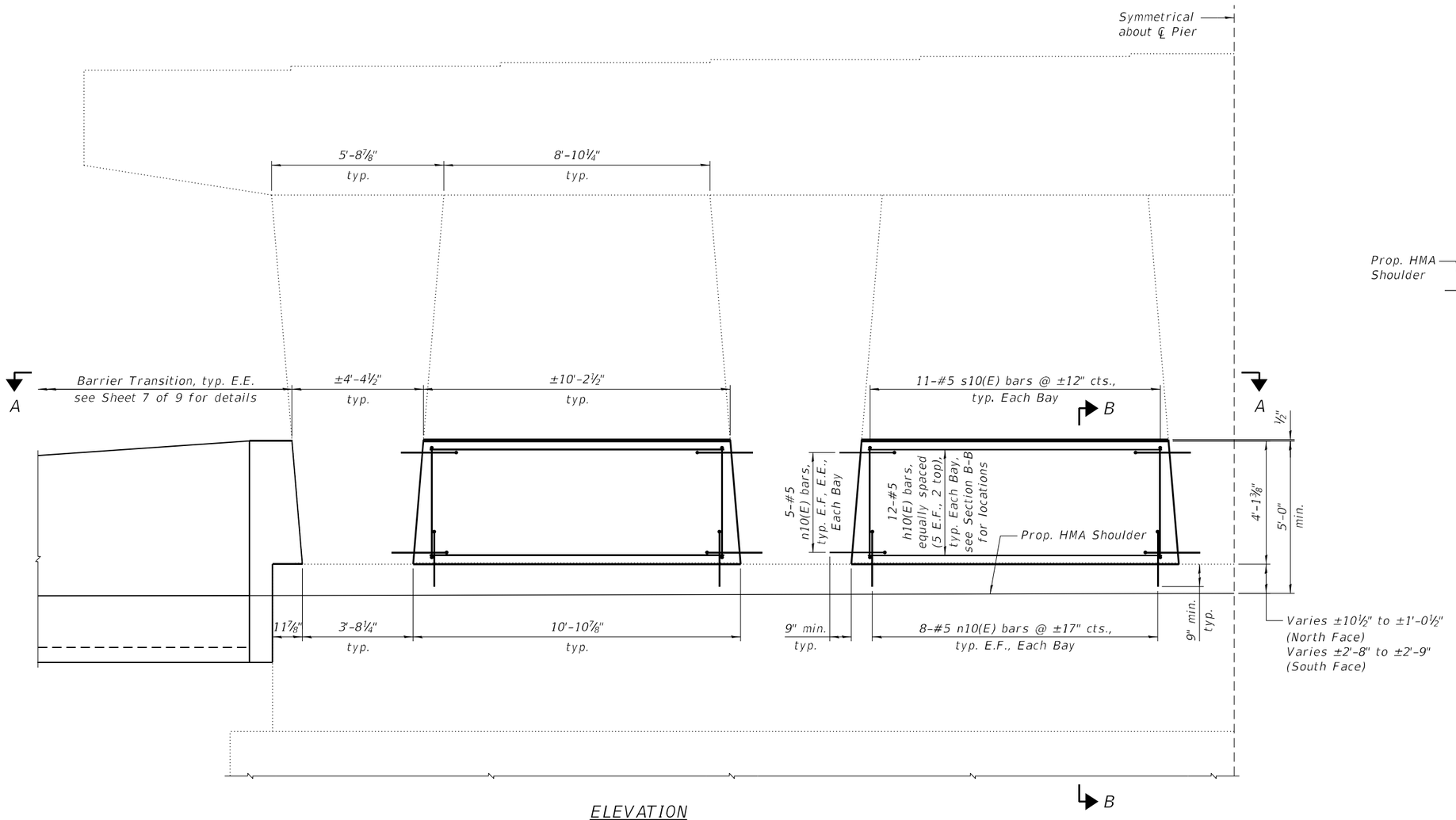

ELEVATION
(Looking South)

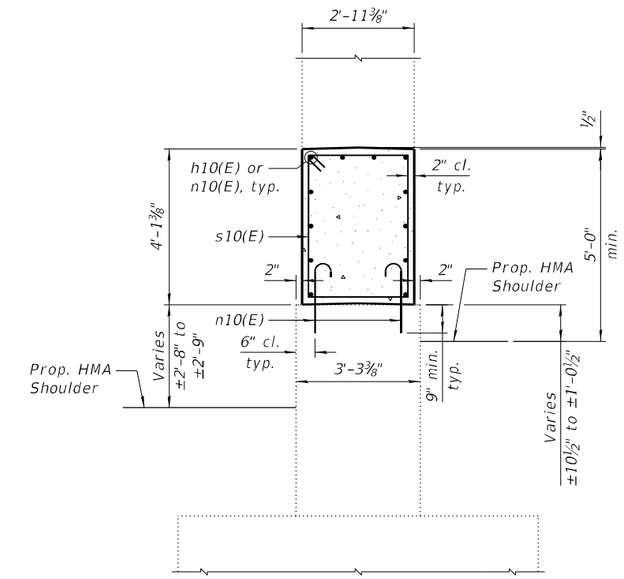

SECTION B-B

BILL OF MATERIAL

Bar	No.	Size	Length	Shape
h10(E)	48	#5	9'-10"	
n10(E)	144	#5	2'-5"	
s10(E)	44	#5	13'-7"	

Item	Unit	Quantity
Concrete Structures	Cu. Yd.	19.0
Reinforcement Bars, Epoxy Coated	Pound	1,480
Concrete Sealer	Sq. Ft.	468

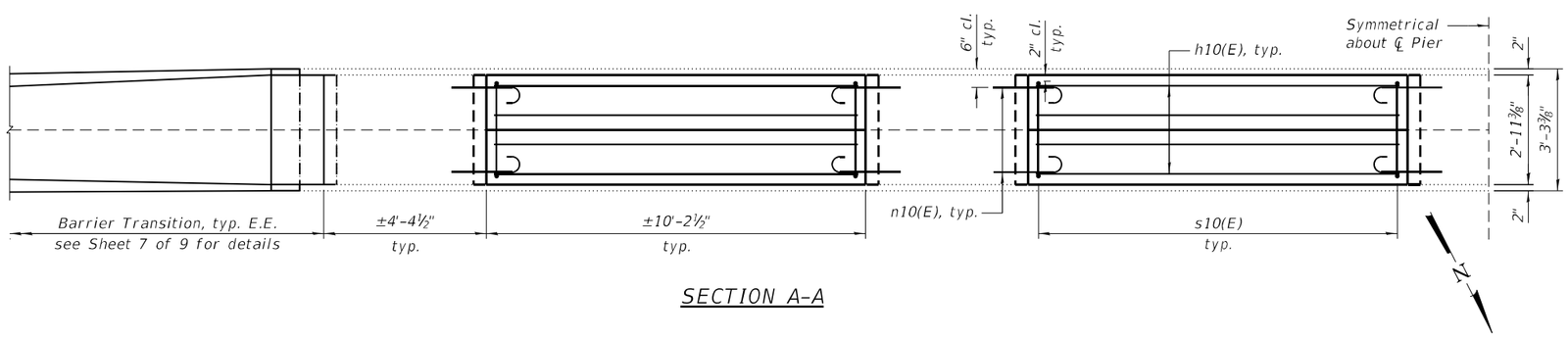

SECTION A-A

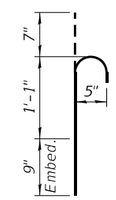

BAR n10(E)

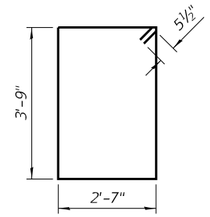

BAR s10(E)

NOTES:

1.) Drill & epoxy grout #5 n10(E) bars 9" min. into existing concrete according to Section 584 of the Standard Specifications.
2.) Concrete Sealer shall be applied according to Section 587 of the Standard Specifications to exposed surface of proposed pier crashwall extensions.
3.) E.F. denotes Each Face and E.E. denotes Each End.

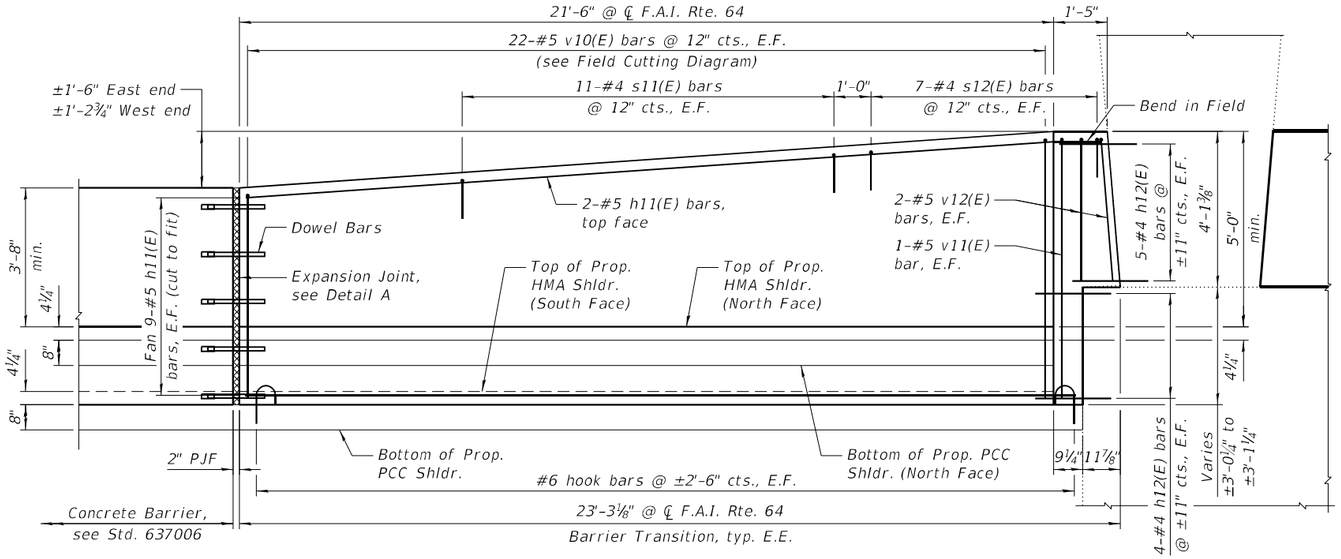

ELEVATION

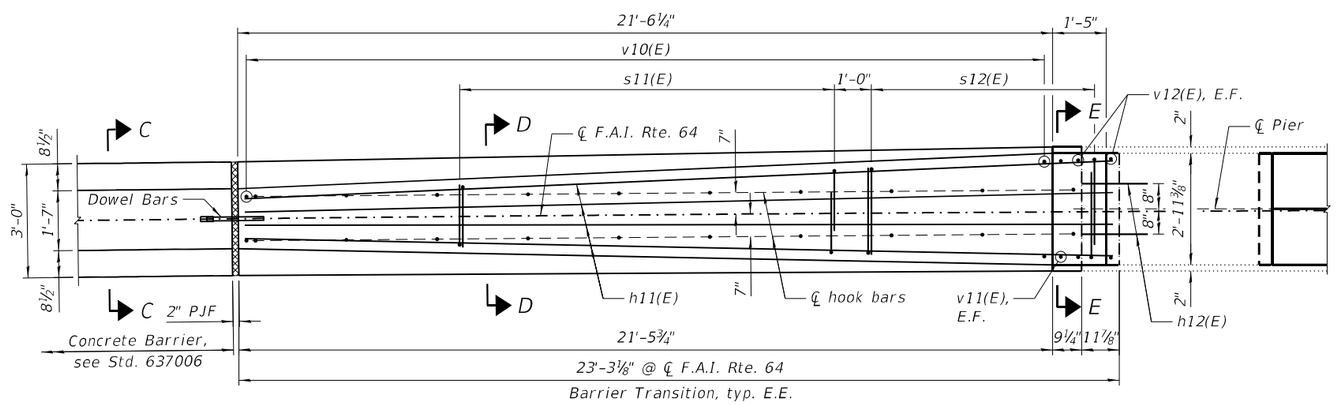

PLAN

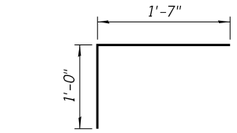

BAR s11(E)

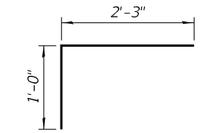

BAR s12(E)

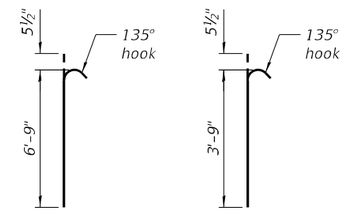

BAR v11(E) BAR v12(E)

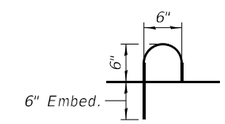

HOOK BAR DETAIL

(See Std. 637006)

BILL OF MATERIAL

(Two Barrier Transitions)

Bar	No.	Size	Length	Shape
h11(E)	40	#5	22'-11"	
h12(E)	36	#4	1'-9"	
s11(E)	44	#4	2'-7"	
s12(E)	28	#4	3'-3"	
v10(E)	44	#5	13'-0"	
v11(E)	4	#5	7'-3"	
v12(E)	8	#5	4'-3"	

Item	Unit	Quantity
Concrete Structures	Cu. Yd.	26.1
Reinforcement Bars, Epoxy Coated	Pound	1,800
Concrete Sealer	Sq. Ft.	591

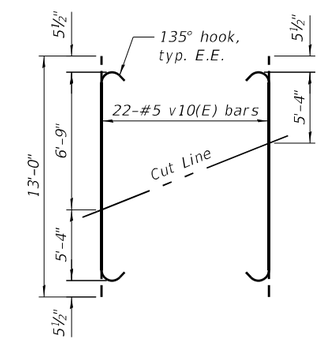

FIELD CUTTING DIAGRAM

Order v10(E) bars full length. Cut as shown and use remainder of bars in opposite face.

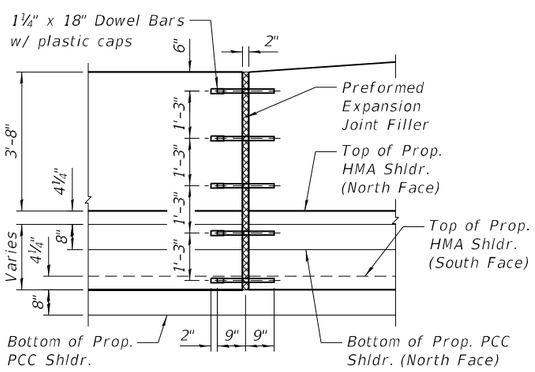

DETAIL A - EXPANSION JOINT

(See Std. 637006)

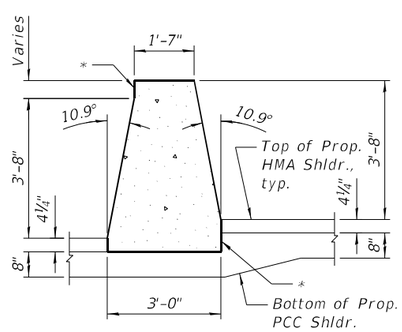

SECTION C-C

(See Std. 637006)

*1:48 batter permitted

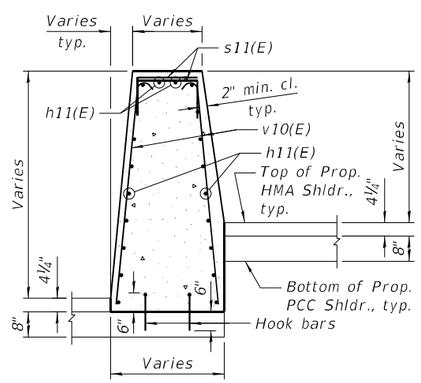

SECTION D-D

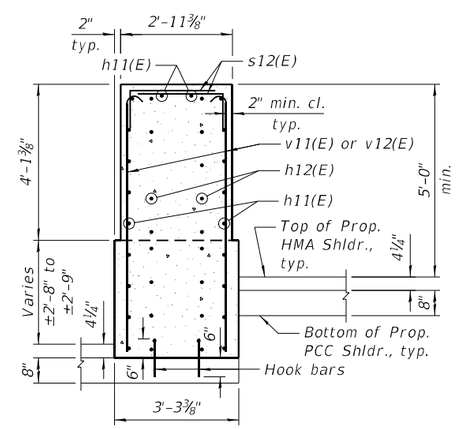

SECTION E-E

NOTES:

1.) Drill & epoxy grout #4 h12(E) bars 9" min. into existing concrete according to Article 584 of the Standard Specifications.
2.) The cost of the expansion joint shall be included with Concrete Structures.
3.) The cost of the hook bars shall be included with Concrete Structures.
4.) Concrete Sealer shall be applied according to Section 587 of the Standard Specifications to exposed surface of proposed barrier transitions.
5.) E.F. denotes Each Face and E.E. denotes Each End.
6.) See Sheet 1 of 9 for location of Barrier Transitions.

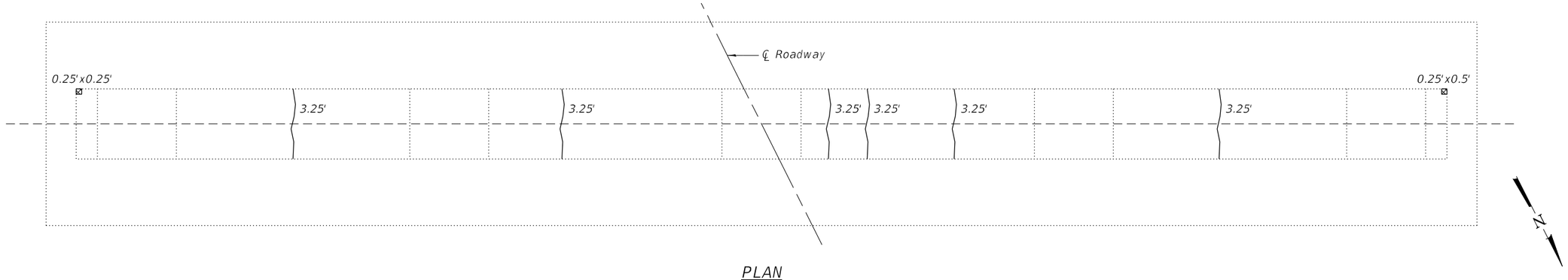

PLAN

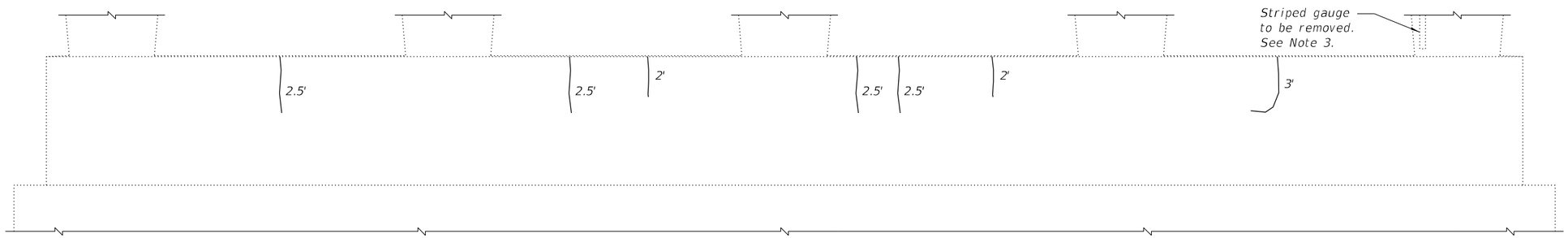

PARTIAL PIER ELEVATION

(Looking South)

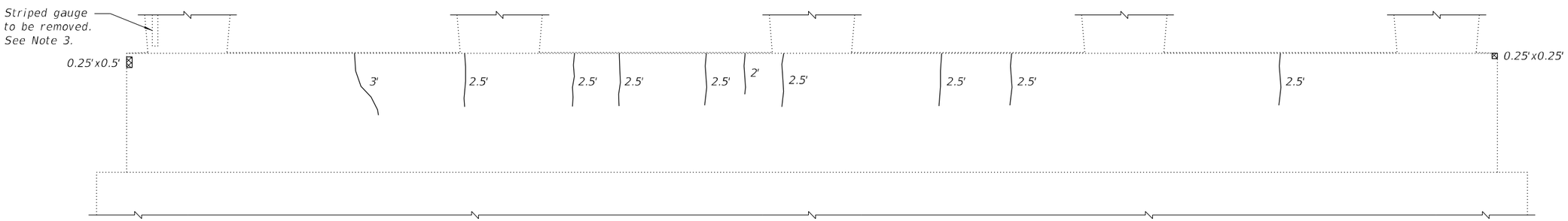

PARTIAL PIER ELEVATION

(Looking North)

NOTES:

1.) The repair areas shown are estimated based on field inspections conducted in November 2022. The actual repair areas required shall be verified according to the special provisions.

2.) Concrete Sealer shall be applied according to Section 587 of the Standard Specifications to all exposed faces of the pier repairs, and also on the traffic face of the existing pier surfaces.

3.) Fill holes in pier face with epoxy grout, in accordance with Section 584 of the Standard Specifications. This work will not be measured or paid for separately, but shall be considered as included in the contract unit price for the associated work. Anticipate two holes per gauge.

BILL OF MATERIAL

ITEM	UNIT	TOTAL
Concrete Sealer	Sq. Ft.	1,424
Epoxy Crack Injection	Foot	62
Structural Repair of Concrete (Depth Equal to or Less Than 5 Inches)	Sq. Ft.	1

LEGEND

Structural Repair of Concrete (Depth Equal to or Less than 5 Inches)

L.F. Epoxy Crack Injection

Farnsworth GROUP		DESIGNED - DJM	REVISED
		CHECKED - VPT	REVISED
		DRAWN - DJM	REVISED
	DATE - 09/12/2024	CHECKED - VPT	REVISED

STATE OF ILLINOIS
DEPARTMENT OF TRANSPORTATION

PIER REPAIRS
STRUCTURE NO. 082–0344

SHEET NO. 8 OF 9 SHEETS

F.A.I. RTE.	SECTION	COUNTY	TOTAL SHEETS	SHEET NO.
64	82-7WRS-2	ST. CLAIR	691	476
		CONTRACT NO. 76K74		
		ILLINOIS		

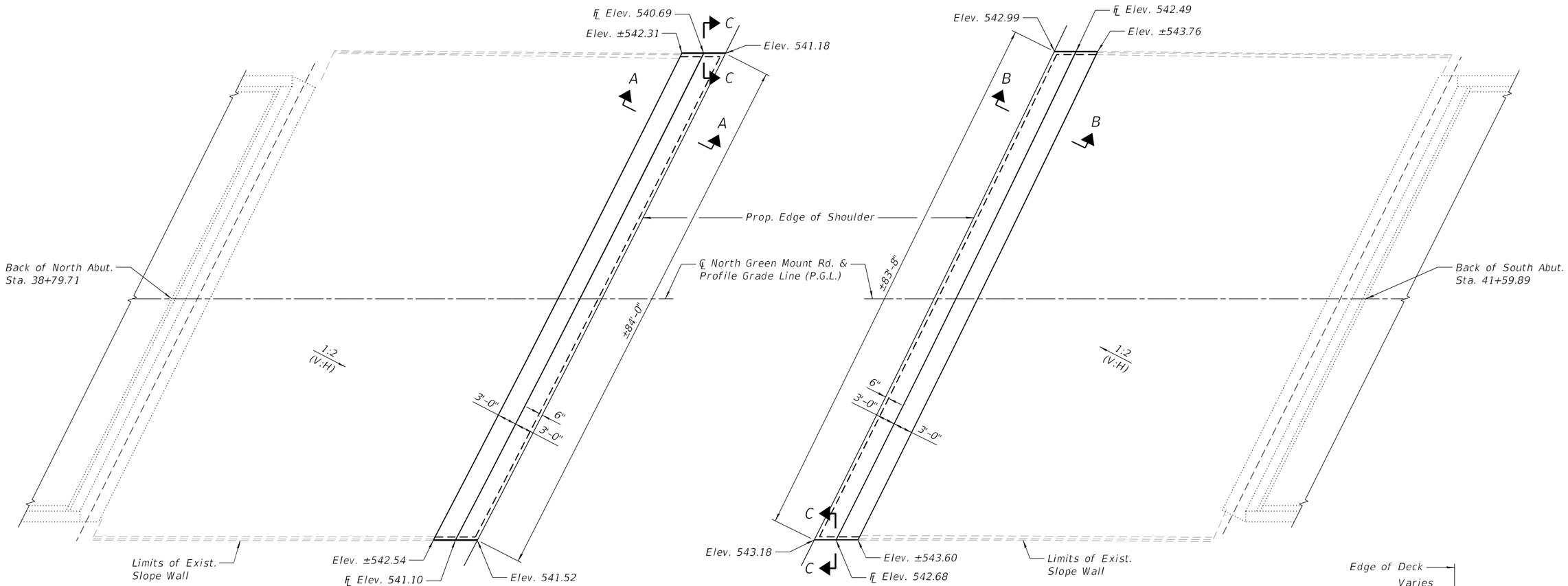

PLAN

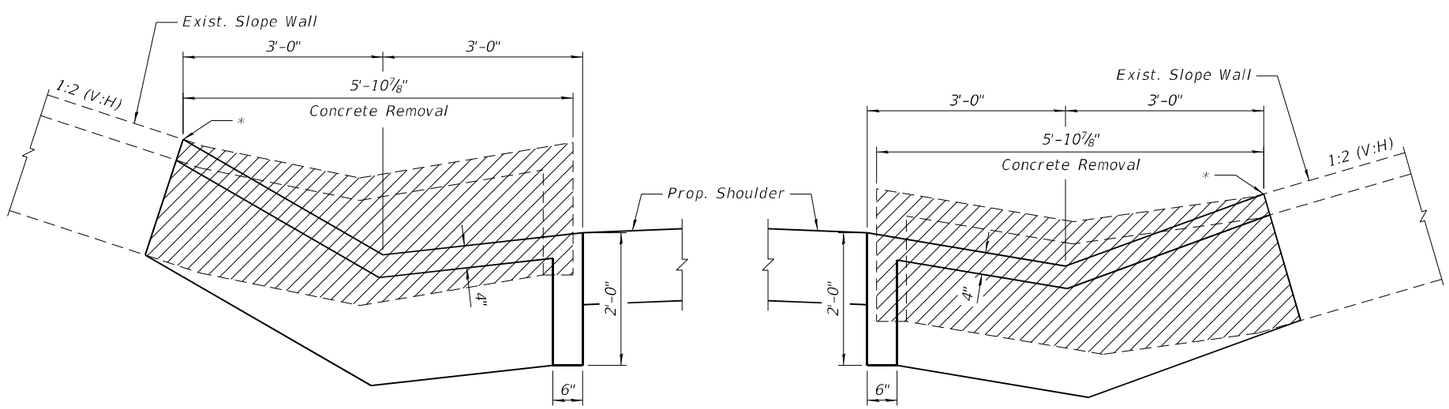

SECTION A-A

*Match Exist. Slope Wall Elevation, typ.

SECTION B-B

*Match Exist. Slope Wall Elevation, typ.

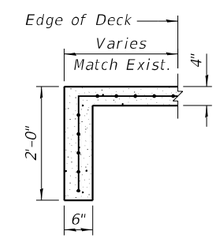

SECTION C-C

BILL OF MATERIAL

ITEM	UNIT	TOTAL
Concrete Removal	Cu. Yd.	18.1
Slope Wall 4 Inch	Sq. Yd.	119

LEGEND

Concrete Removal for Slope Wall

NOTE:

Slope wall shall be reinforced with welded wire fabric, 6 in. x 6 in. - W4.0 x W4.0, weighing 58 lbs. per 100 sq. ft.

Farnsworth GROUP		DESIGNED - DJM	REVISED
		CHECKED - VPT	REVISED
		DRAWN - DJM	REVISED
	DATE - 09/12/2024	CHECKED - VPT	REVISED

STATE OF ILLINOIS
DEPARTMENT OF TRANSPORTATION

SLOPE WALL MODIFICATION DETAILS
STRUCTURE NO. 082-0344

SHEET NO. 9 OF 9 SHEETS

F.A.I. RTE.	SECTION	COUNTY	TOTAL SHEETS	SHEET NO.
64	82-7WRS-2	ST. CLAIR	691	477
		CONTRACT NO. 76K74		
		ILLINOIS		

Existing Structure: Existing Ramp A pipe culvert was constructed in 2001 as Section 82-7-2K. The culvert measures 136'-8" out to out of headwalls, and consists of two 78" ø Reinforced Concrete Pipes, with cast-in-place concrete apron end sections. Ramp A will remain open to traffic during construction.

Precast alternate is not allowed.

No Salvage.

INDEX OF SHEETS

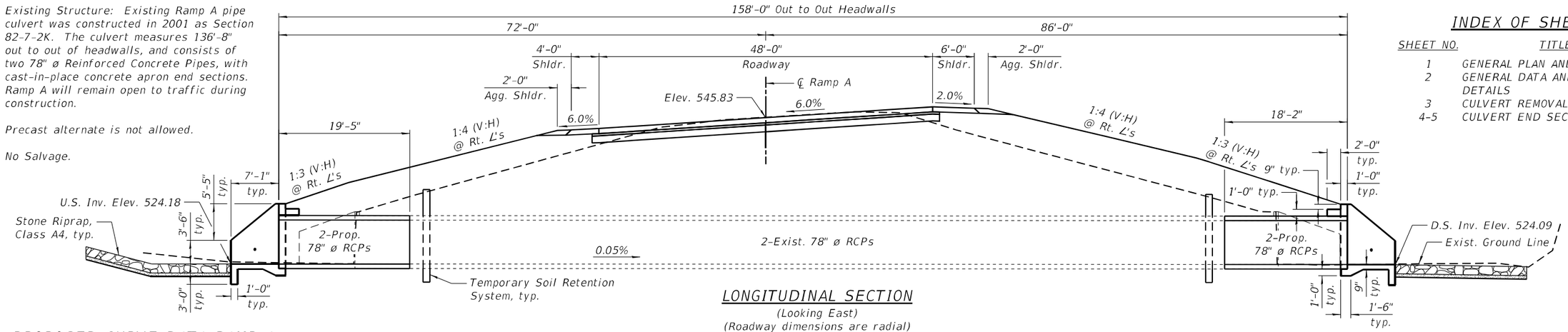

LONGITUDINAL SECTION

(Looking East)
(Roadway dimensions are radial)

PROPOSED CURVE DATA RAMP A

Δ = 23°13'53" (LT)
D = 07°53'31"
R = 726.00'
T = 149.23'
L = 294.37'
E = 15.18'
e = 6.10%
P.C. Sta. = 17+39.93
P.I. Sta. = 18+89.16
P.T. Sta. = 20+34.29

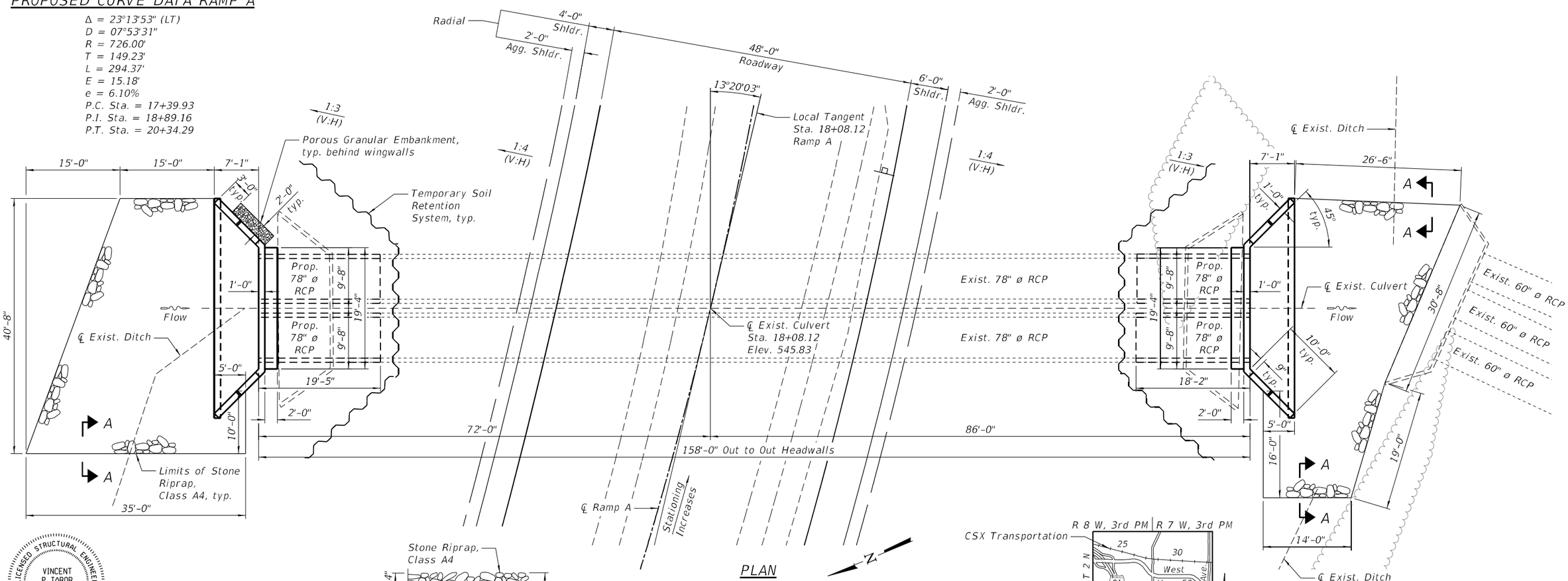

PLAN

Vincent P. Tabor 09/12/2024

Vincent P. Tabor — Date
Licensed Structural Engineer
State of Illinois No. 081-007047
Expires 11/30/2024

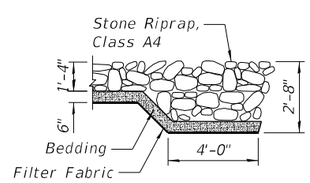

SECTION A-A

DESIGN SPECIFICATIONS

2020 AASHTO LRFD Bridge Design Specifications, Customary U.S. Units, 9th Edition

DESIGN STRESSES

FIELD UNITS:

f'c = 5,000 psi (14-day)
fy = 60,000 psi (Reinforcement)
fy = 65,000 psi (Welded Wire Fabric)

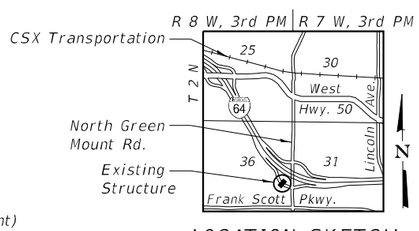

LOCATION SKETCH

I-64 RAMP A
F.A.I. RTE. 64 - SEC. 82-7WRS-2
ST. CLAIR COUNTY
STATION 18+08.12

Farnsworth GROUP

	DESIGNED - DJM	REVISED
	CHECKED - VPT	REVISED
	DRAWN - DJM	REVISED
DATE - 09/12/2024	CHECKED - VPT	REVISED

STATE OF ILLINOIS
DEPARTMENT OF TRANSPORTATION

GENERAL PLAN AND ELEVATION

SHEET NO. 1 OF 5 SHEETS

F.A.I. RTE.	SECTION	COUNTY	TOTAL SHEETS	SHEET NO.
64	82-7WRS-2	ST. CLAIR	691	478
		CONTRACT NO. 76K74		
		ILLINOIS		

TOTAL BILL OF MATERIAL

ITEM	UNIT	TOTAL
Porous Granular Embankment	Cu. Yd.	61
Stone Riprap, Class A4	Sq. Yd.	208
Filter Fabric	Sq. Yd.	208
Concrete Removal	Cu. Yd.	24.3
Pipe Culvert Removal	Foot	32
Temporary Soil Retention System	Sq. Ft.	841
Cast-In-Place Reinforced Concrete End Sections 78"	Each	2
Pipe Culverts, Class C, Type 2 78"	Foot	75

GENERAL NOTES:

1.) Cast-in-place concrete exposed edges shall be beveled 3/4 in.
2.) Structural seal is for cast-in-place portion of structure only.
3.) Plan dimensions and details relative to existing plans are subject to nominal construction variations. The Contractor shall field verify existing dimensions and details affecting new construction and make necessary approved adjustments prior to construction or ordering of materials. Such variations shall not be cause for additional compensation for a change in scope of the work, however, the Contractor will be paid for the quantity actually furnished at the unit price bid for the work.
4.) The Contractor may request copies of existing construction plans that are currently on file with the Department. The request shall be in writing with the understanding that any reproduction cost will be at the Contractor's expense at no additional cost to the Department.
5.) Cast-in-Place Reinforced Concrete End Sections shall be constructed according to the requirements of Section 542 of the Standard Specifications except as modified herein. End sections will be paid for at the contract unit price per each for Cast-in-Place Reinforced Concrete End Sections. Cost of end sections shall include all labor, materials, tools, equipment, and other incidentals necessary that are not otherwise indicated to be paid for separately in these Plans.
6.) Shop drawings that detail slab thickness and reinforcement layout for the Cast-in-Place Reinforced Concrete End Sections shall be provided to the Engineer for review and approval. Reinforcement not detailed herein shall be detailed with a clear distance at the end of the reinforcement not less than 1/2" nor more than 2".
7.) The Contractor may use reinforcement bars in lieu of welded wire reinforcement (WWR). Reinforcement bars shall be limited to the sizes of #3 through #5 bars, a maximum spacing of the lesser of 8" or the member thickness, and shall result in an area of reinforcement equal to or greater than that provided by the WWR. Minimum lap lengths detailed herein are applicable to WWR and reinforcement bars.
8.) Channel excavation, earth excavation, and structure excavation will not be paid for separately; but shall be included in the cost of Stone Riprap, Class A4. See the Special Provision for Channel Excavation.
9.) Proposed 78" ø Reinforced Concrete Pipe (RCP) ends shall mate with the existing 78" ø RCP ends that will remain, so as to provide a bell to spigot connection.

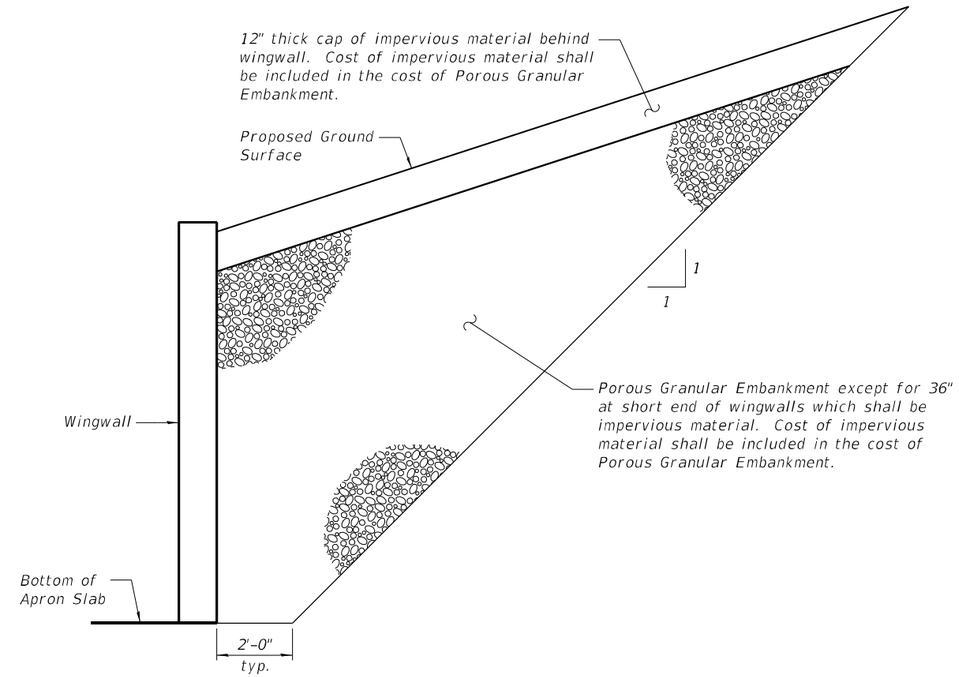

SECTION THROUGH WINGWALL

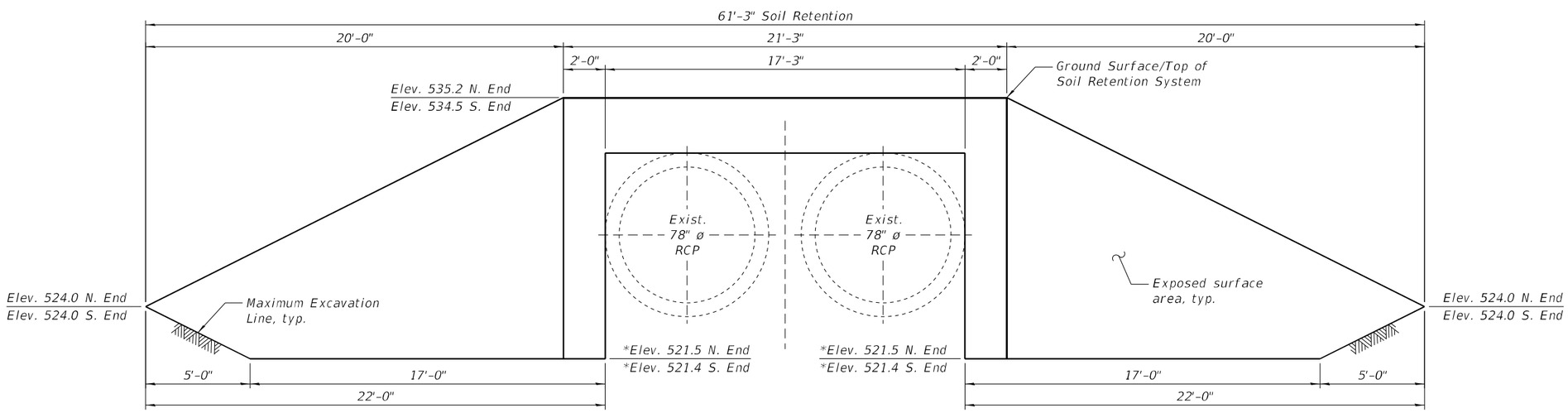

TEMPORARY SOIL RETENTION SYSTEM

(Upstream end looking South, downstream end similar)

*Bottom of excavation elevations allow for ±2'-0" additional overexcavation below the bottom of the existing pipe culvert. Depth of any required overexcavation shall be determined in the field at the time of construction.

A cantilevered sheet piling design does not appear feasible and additional members or other retention systems may be necessary. The Contractor shall submit a temporary soil retention system design including plan details and calculations for review and acceptance by the Engineer.

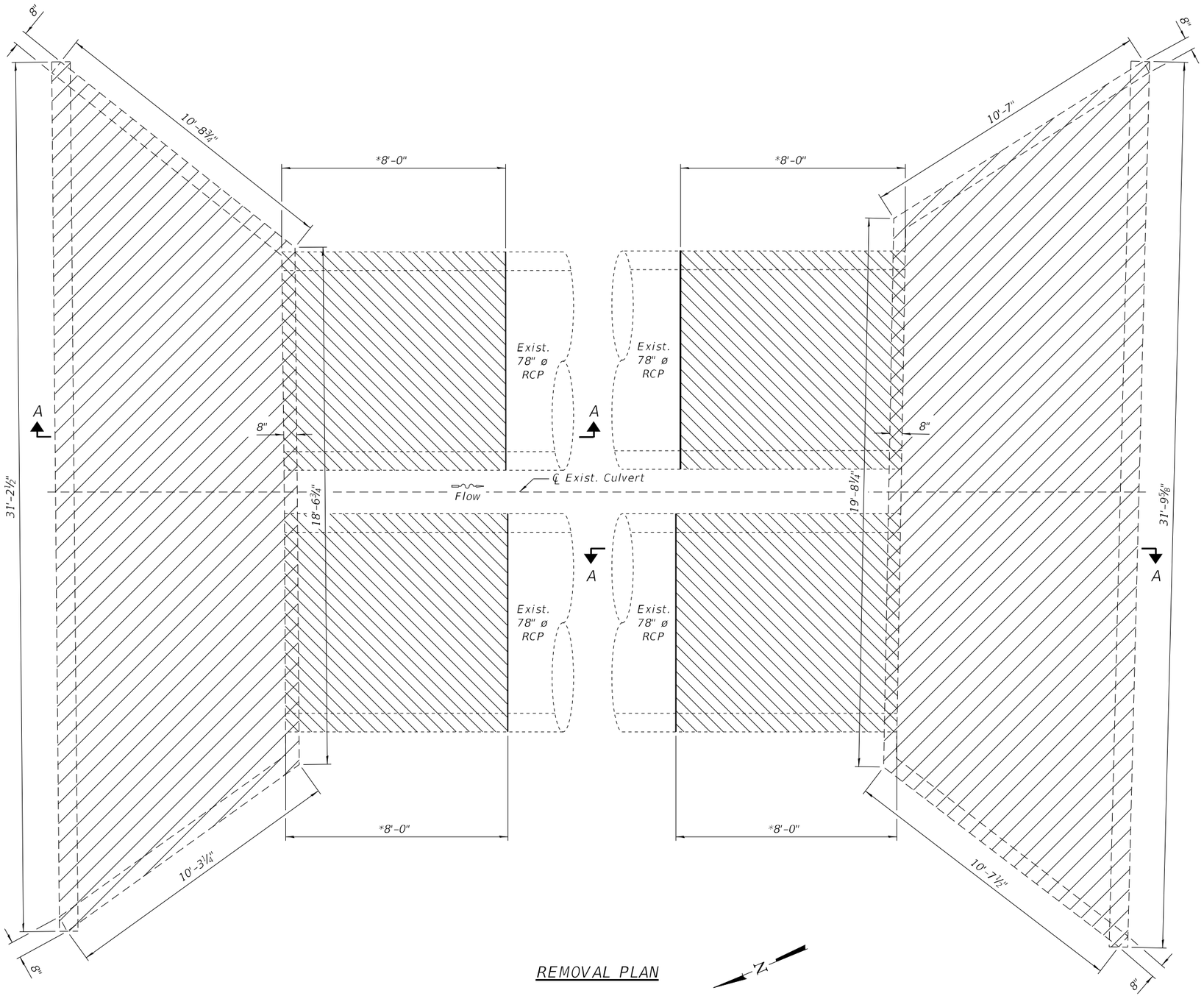

REMOVAL PLAN

LEGEND

Concrete Removal

Pipe Culvert Removal

BILL OF MATERIAL

ITEM	UNIT	TOTAL
Concrete Removal	Cu. Yd.	24.3
Pipe Culvert Removal	Foot	32

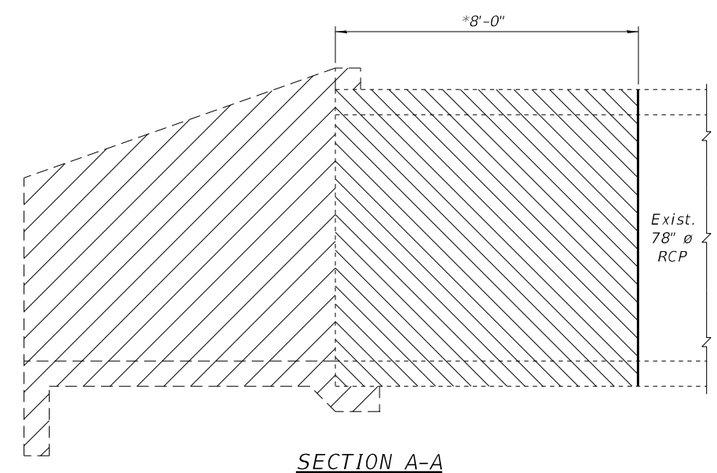

SECTION A-A

NOTE:

*Remove existing 78" ø Reinforced Concrete Pipe (RCP) from the first joint to the end of the pipe. Verify length of pipe segment in the field.

Farnsworth GROUP

	DESIGNED - DJM	REVISED
	CHECKED - VPT	REVISED
	DRAWN - DJM	REVISED
DATE - 09/12/2024	CHECKED - VPT	REVISED

STATE OF ILLINOIS
DEPARTMENT OF TRANSPORTATION

CULVERT REMOVAL DETAILS

SHEET NO. 3 OF 5 SHEETS

F.A.I. RTE.	SECTION	COUNTY	TOTAL SHEETS	SHEET NO.
64	82-7WRS-2	ST. CLAIR	691	480
		CONTRACT NO. 76K74		
	ILLINOIS			

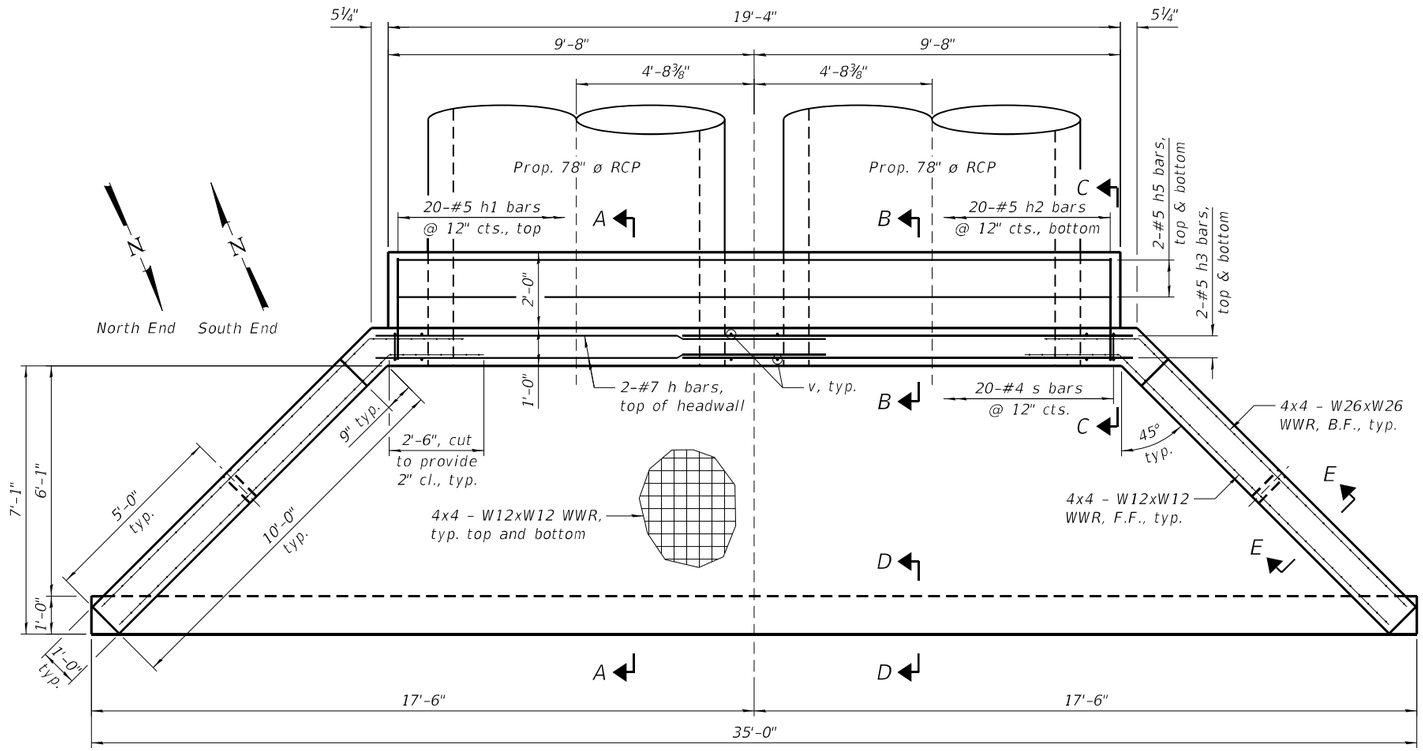

PLAN

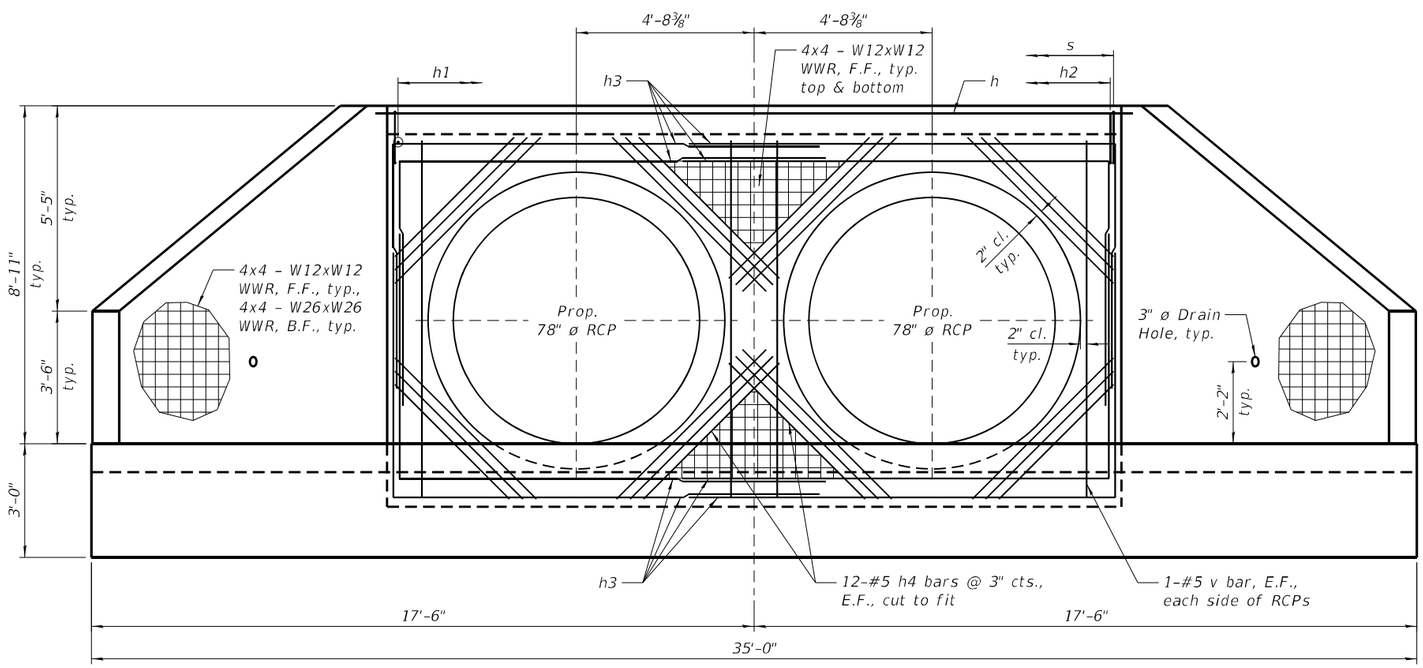

END VIEW

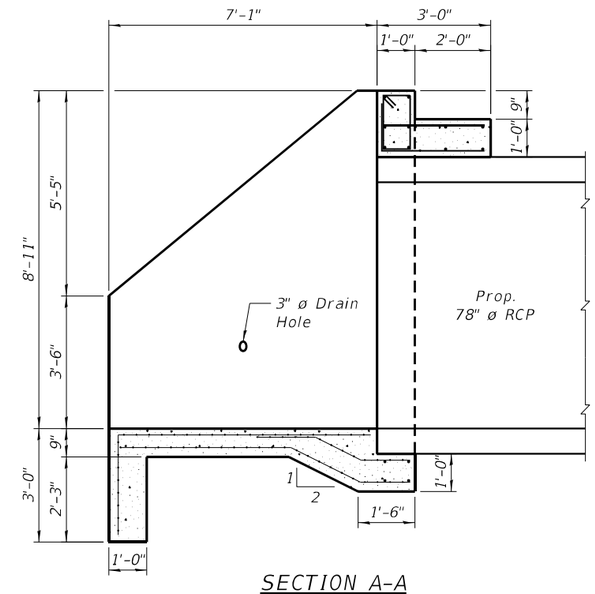

SECTION A-A

NOTES:

1.) E.F. denotes Each Face, F.F. denotes Front Face, and B.F. denotes Back Face.
2.) Cut h4 bars as required to fit diagonally around the 78" ø RCP and maintain a minimum 2" clearance from the outside face of the RCP.
3.) One drain hole shall be provided in each wingwall. The drain hole shall conform to the requirements of Article 503.11 of the Standard Specifications.
4.) See Sheet 5 of 5 for Sections B-B, C-C, D-D, and E-E.

Farnsworth GROUP	DESIGNED - DJM	REVISED	STATE OF ILLINOIS DEPARTMENT OF TRANSPORTATION
	CHECKED - VPT	REVISED	
	DRAWN - DJM	REVISED	
DATE - 09/12/2024	CHECKED - VPT	REVISED	

CULVERT END SECTION DETAILS

SHEET NO. 4 OF 5 SHEETS

F.A.I. RTE.	SECTION	COUNTY	TOTAL SHEETS	SHEET NO.
64	82-7WRS-2	ST. CLAIR	691	481
		CONTRACT NO. 76K74		
		ILLINOIS		

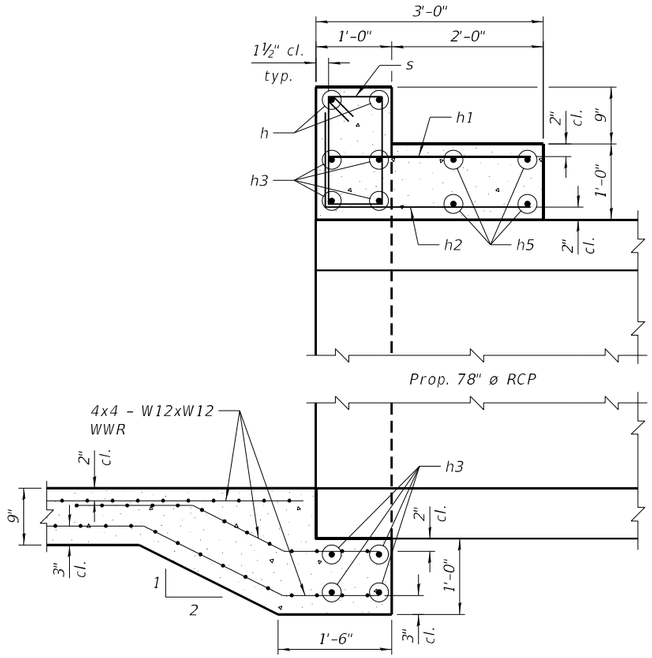

SECTION B-B

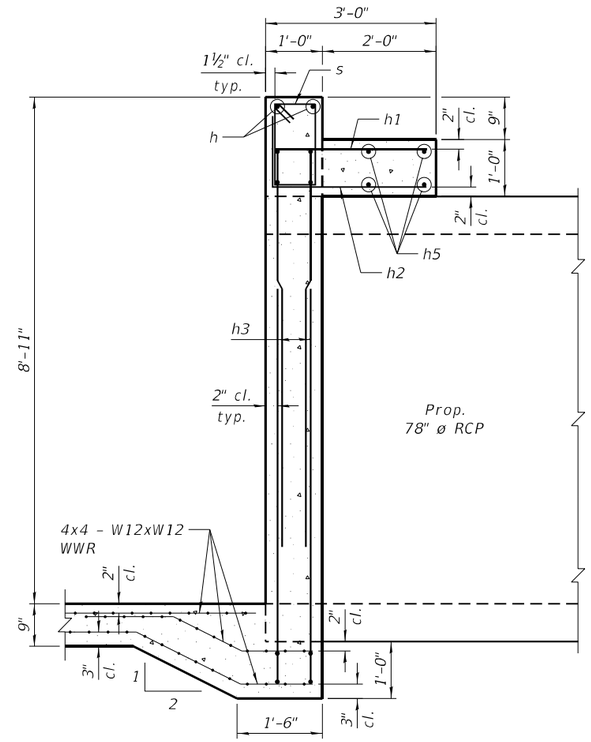

SECTION C-C

TWO END SECTIONS BILL OF MATERIAL

(For information only)

Bar	No.	Size	Length	Shape
h	4	#7	20'-0"	
h1	40	#5	2'-8"	
h2	40	#5	4'-0"	
h3	32	#5	17'-3"	
h4	96	#5	5'-9"	
h5	8	#5	19'-0"	
s	40	#4	5'-3"	
v	16	#5	9'-5"	

ITEM	UNIT	TOTAL
Welded Wire Reinforcement	Sq. Yd.	189
Concrete Structures	Cu. Yd.	40.2
Reinforcement Bars	Pound	2,050

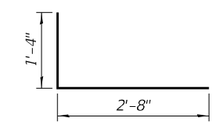

BAR h2

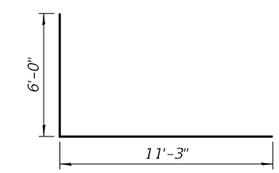

BAR h3

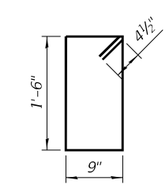

BAR s

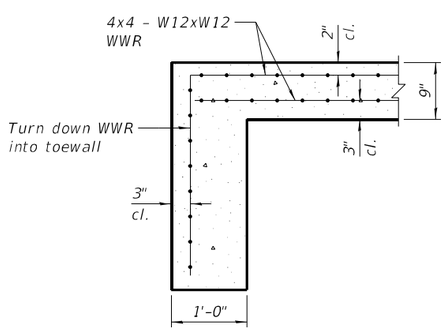

SECTION D-D

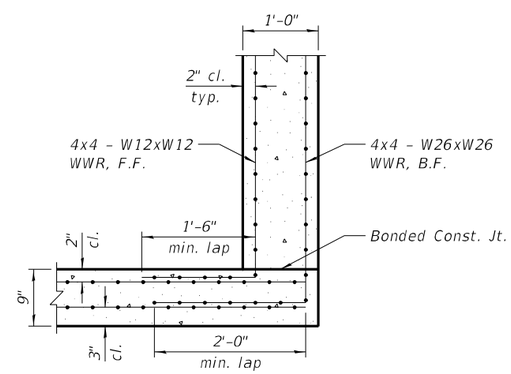

SECTION E-E

NOTES:

1.) F.F. denotes Front Face and B.F. denotes Back Face.
2.) See Sheet 4 of 5 for locations of Sections B-B, C-C, D-D, and E-E.

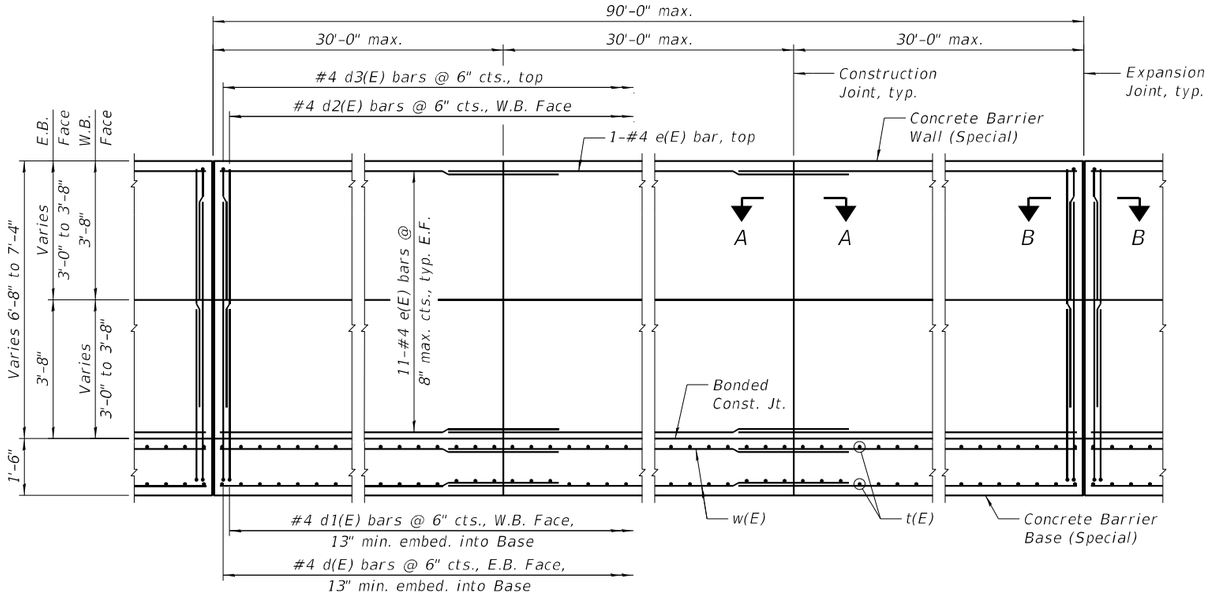

TYPICAL ELEVATION

(Eastbound Face)

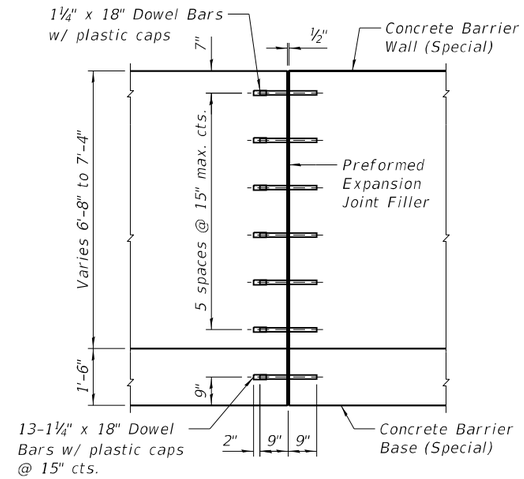

EXPANSION JOINT DETAIL

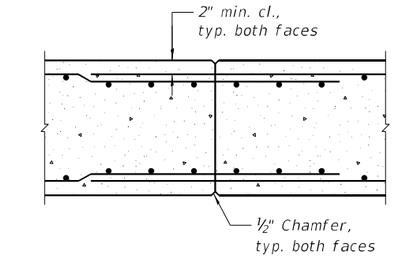

SECTION A-A - CONSTRUCTION JOINT

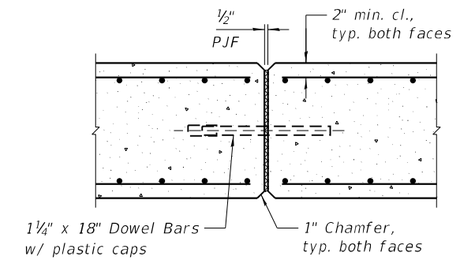

SECTION B-B - EXPANSION JOINT

MINIMUM BAR LAP

Horizontal #4 bar = 2'-11"
Vertical #4 bar = 2'-7"
Horizontal #5 bar = 3'-7"

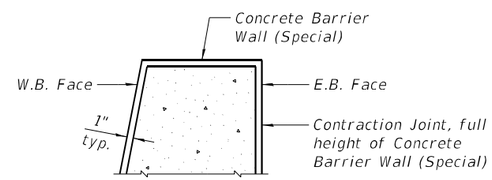

CONTRACTION JOINT DETAIL

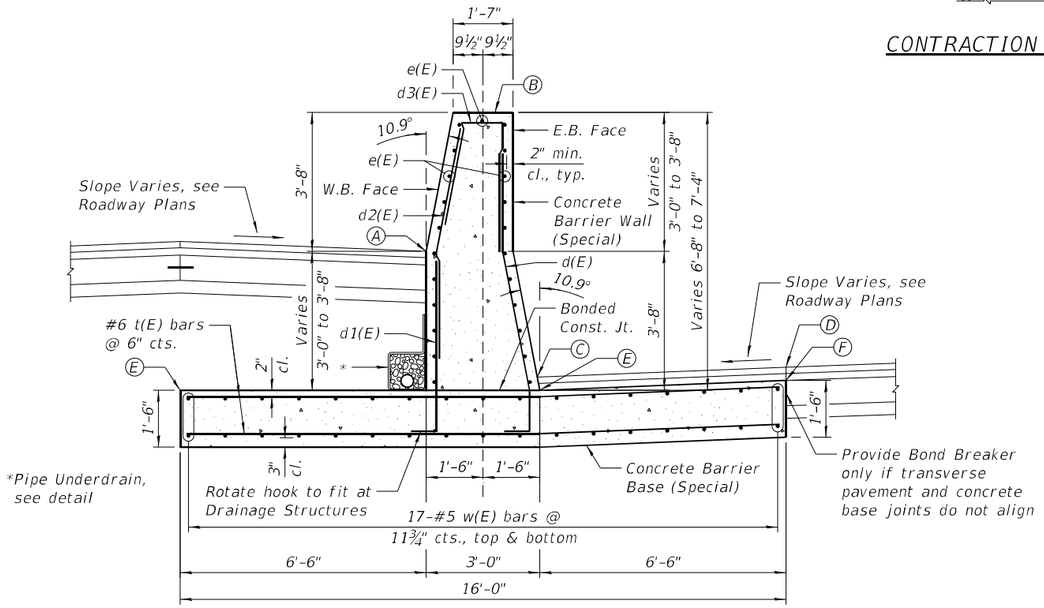

TYPICAL SECTION

Sta. 733+75.00 to Sta. 745+75.00
Sta. 752+75.00 to Sta. 753+75.00

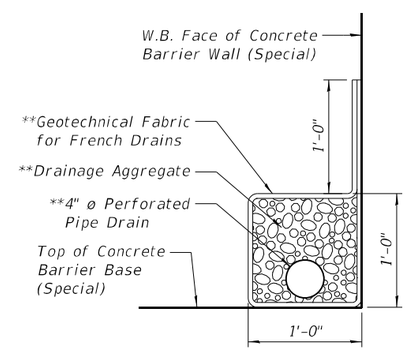

PIPE UNDERDRAIN DETAIL

**Included in the cost of Concrete Barrier Base (Special)

TOTAL BILL OF MATERIAL

ITEM	UNIT	TOTAL
Concrete Barrier Base (Special)	Foot	1,300
Concrete Barrier Wall (Special)	Foot	1,300

LICENSED STRUCTURAL ENGINEER
VINCENT P. TABOR
081-007047
STATE OF ILLINOIS

Vincent P. Tabor 09/12/2024
Vincent P. Tabor — Date
Licensed Structural Engineer
State of Illinois No. 081-007047
Expires 11/30/2024

NOTES:

1.) Distance between consecutive expansion joints shall be no less than 30'-0", and no greater than 90'-0". Distance from an expansion joint to a drainage structure opening shall be no less than 10'-0". Distance between consecutive construction joints shall be no less than 10'-0", and no greater than 30'-0". Contraction Joints shall be limited to a depth of 1", and spaced according to the requirements of Section 637.08(c) of the Standard Specifications. The cost of the joints shall be included with Concrete Barrier Wall (Special) and Concrete Barrier Base (Special).
2.) Protective Coat shall be applied according to Section 503.19 of the Standard Specifications to exposed surface of the concrete barrier wall, and the cost shall be included with Concrete Barrier Wall (Special).
3.) Excavation for the concrete barrier base and placement of materials beneath it shall be paid for separately. See roadway typical sections, cross-sections, and schedules for further information.
4.) See Special Provisions for Concrete Barrier Wall (Special) and Concrete Barrier Base (Special).
5.) Reinforcement bars designated (E) shall be epoxy coated.
6.) See Sheet 2 of 2 for point elevations (A) thru (F).
7.) See Sheet 2 of 2 for Bill of Material.
8.) E.F. denotes Each Face.

POINT	A	B	C	D	E	F		
STATION	LEFT (W.B.) SHOULDER ELEVATION	TOP OF BARRIER ELEVATION	RIGHT (E.B.) SHOULDER ELEVATION	RIGHT (E.B.) SHOULDER BREAK ELEVATION	TOP OF FOOTING ELEVATION	TOP OF FOOTING ELEVATION AT BREAK	LEFT (W.B.) HEIGHT (FT)	RIGHT (E.B.) HEIGHT (FT)
733+75.00	551.49	555.16	548.68	549.06	548.33	548.71	3.67	6.83
734+00.00	551.58	555.25	548.54	548.88	548.19	548.53	3.67	7.06
734+03.81	551.69	555.36	548.62	548.85	548.27	548.49	3.67	7.09
734+26.91	551.55	555.21	548.39	548.65	548.04	548.30	3.67	7.18
734+50.00	551.40	555.07	548.27	548.52	547.92	548.17	3.67	7.15
734+75.00	551.30	554.96	548.13	548.39	547.78	548.03	3.67	7.19
735+00.00	551.19	554.86	547.99	548.25	547.64	547.90	3.67	7.22
735+25.00	551.06	554.73	547.85	548.10	547.49	547.74	3.67	7.24
735+50.00	550.93	554.60	547.70	547.94	547.35	547.59	3.67	7.25
735+75.00	550.80	554.47	547.56	547.80	547.20	547.44	3.67	7.27
736+00.00	550.67	554.34	547.41	547.65	547.06	547.30	3.67	7.28
736+25.00	550.54	554.21	547.27	547.51	546.92	547.16	3.67	7.29
736+50.00	550.41	554.08	547.13	547.37	546.78	547.02	3.67	7.30
736+75.00	550.25	553.91	547.02	547.25	546.66	546.90	3.67	7.25
737+00.00	550.08	553.75	546.90	547.13	546.55	546.78	3.67	7.20
737+25.00	549.92	553.58	546.78	547.01	546.42	546.65	3.67	7.16
737+50.00	549.75	553.42	546.65	546.88	546.30	546.53	3.67	7.12
737+75.00	549.58	553.25	546.49	546.72	546.13	546.36	3.67	7.12
738+00.00	549.41	553.08	546.32	546.55	545.97	546.20	3.67	7.11
738+25.00	549.25	552.91	546.16	546.39	545.81	546.04	3.67	7.11
738+50.00	549.08	552.75	546.00	546.23	545.65	545.88	3.67	7.10
738+75.00	548.92	552.58	545.84	546.07	545.48	545.72	3.67	7.10
739+00.00	548.75	552.42	545.67	545.91	545.32	545.56	3.67	7.10
739+25.00	548.60	552.26	545.51	545.75	545.16	545.40	3.67	7.11
739+50.00	548.44	552.11	545.35	545.59	545.00	545.24	3.67	7.11
739+75.00	548.27	551.94	545.20	545.44	544.85	545.08	3.67	7.09
740+00.00	548.10	551.77	545.05	545.28	544.70	544.93	3.67	7.07
740+25.00	547.94	551.60	544.87	545.10	544.52	544.75	3.67	7.09
740+50.00	547.77	551.44	544.69	544.92	544.34	544.57	3.67	7.10

Note: See Typical Section on Sheet 1 of 2 for locations of elevations A thru F.

POINT	A	B	C	D	E	F		
STATION	LEFT (W.B.) SHOULDER ELEVATION	TOP OF BARRIER ELEVATION	RIGHT (E.B.) SHOULDER ELEVATION	RIGHT (E.B.) SHOULDER BREAK ELEVATION	TOP OF FOOTING ELEVATION	TOP OF FOOTING ELEVATION AT BREAK	LEFT (W.B.) HEIGHT (FT)	RIGHT (E.B.) HEIGHT (FT)
740+75.00	547.61	551.27	544.52	544.75	544.16	544.40	3.67	7.11
741+00.00	547.44	551.11	544.34	544.58	543.99	544.23	3.67	7.12
741+25.00	547.31	550.97	544.20	544.44	543.84	544.08	3.67	7.13
741+50.00	547.17	550.84	544.05	544.29	543.70	543.94	3.67	7.14
741+75.00	547.04	550.70	543.90	544.13	543.54	543.78	3.67	7.16
742+00.00	546.90	550.57	543.74	543.97	543.39	543.62	3.67	7.18
742+25.00	546.75	550.41	543.60	543.83	543.25	543.48	3.67	7.17
742+50.00	546.59	550.26	543.46	543.69	543.11	543.34	3.67	7.15
742+75.00	546.43	550.10	543.30	543.53	542.95	543.18	3.67	7.15
743+00.00	546.27	549.94	543.14	543.37	542.79	543.02	3.67	7.15
743+25.00	546.12	549.78	542.99	543.21	542.63	542.86	3.67	7.15
743+50.00	545.96	549.63	542.83	543.05	542.48	542.70	3.67	7.15
743+75.00	545.80	549.47	542.68	542.90	542.32	542.55	3.67	7.15
744+00.00	545.64	549.31	542.52	542.75	542.17	542.40	3.67	7.14
744+15.00	545.56	549.23	542.40	542.66	542.05	542.31	3.67	7.18
744+32.50	545.40	549.07	542.29	542.55	541.93	542.19	3.67	7.14
744+50.00	545.24	548.91	542.17	542.43	541.82	542.08	3.67	7.09
744+75.00	545.05	548.72	542.01	542.27	541.65	541.91	3.67	7.07
745+00.00	544.86	548.53	541.84	542.10	541.49	541.75	3.67	7.04
745+25.00	544.65	548.32	541.68	541.94	541.32	541.58	3.67	7.00
745+50.00	544.44	548.11	541.51	541.77	541.16	541.42	3.67	6.95
745+75.00	544.20	547.87	541.34	541.60	540.99	541.25	3.67	6.88
752+75.00	542.23	545.90	539.25	539.51	538.89	539.15	3.67	7.01
753+00.00	542.34	546.01	539.26	539.52	538.91	539.17	3.67	7.10
753+25.00	542.46	546.12	539.40	539.66	539.04	539.30	3.67	7.08
753+50.00	542.57	546.24	539.53	539.79	539.18	539.44	3.67	7.06
753+75.00	542.66	546.33	539.68	539.94	539.33	539.59	3.67	7.00

Note: See Typical Section on Sheet 1 of 2 for locations of elevations A thru F.

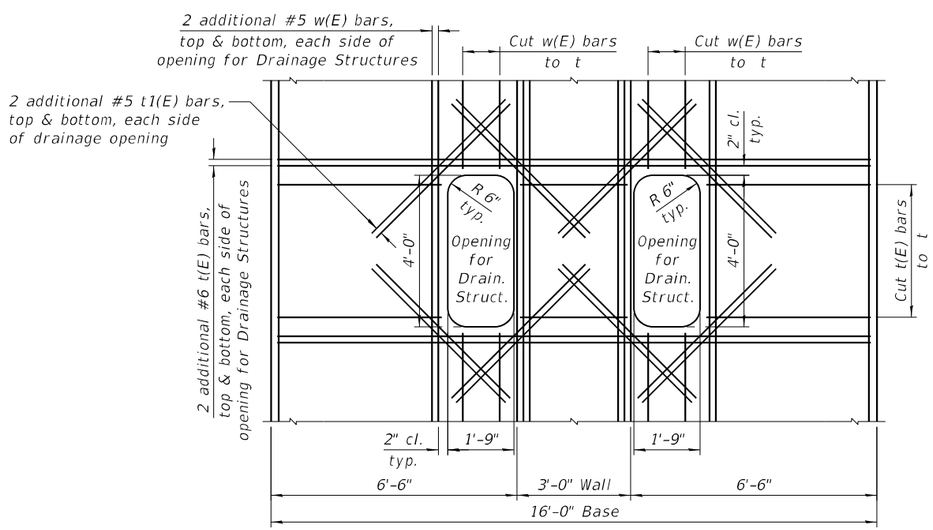

REINFORCEMENT AROUND DRAINAGE STRUCTURES

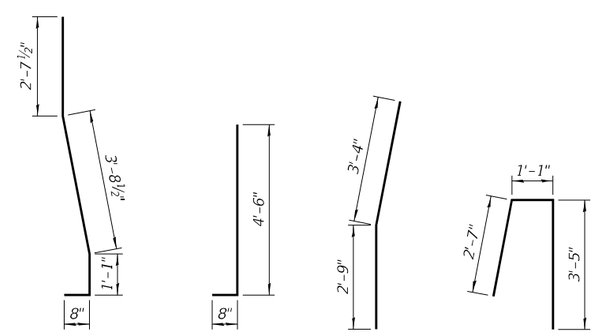

DIFFERENTIAL HEIGHT MEDIAN BARRIER BILL OF MATERIAL

(For Information Only)

Bar	No.	Size	Length	Shape
d(E)	2,600	#4	8'-1"	
d1(E)	2,600	#4	5'-2"	
d2(E)	2,600	#4	6'-1"	
d3(E)	2,600	#4	7'-1"	
e(E)	994	#4	31'-10"	
t(E)	5,304	#6	15'-8"	
t1(E)	208	#5	5'-0"	
w(E)	1,573	#5	32'-4"	

Item	Unit	Quantity
Concrete Structures (Retaining Wall)	Cu. Yd.	1,941
Reinforcement Bars, Epoxy Coated	Pound	245,970
Protective Coat	Sq. Yd.	1,789
Pipe Underdrains for Structures 4"	Foot	1,300

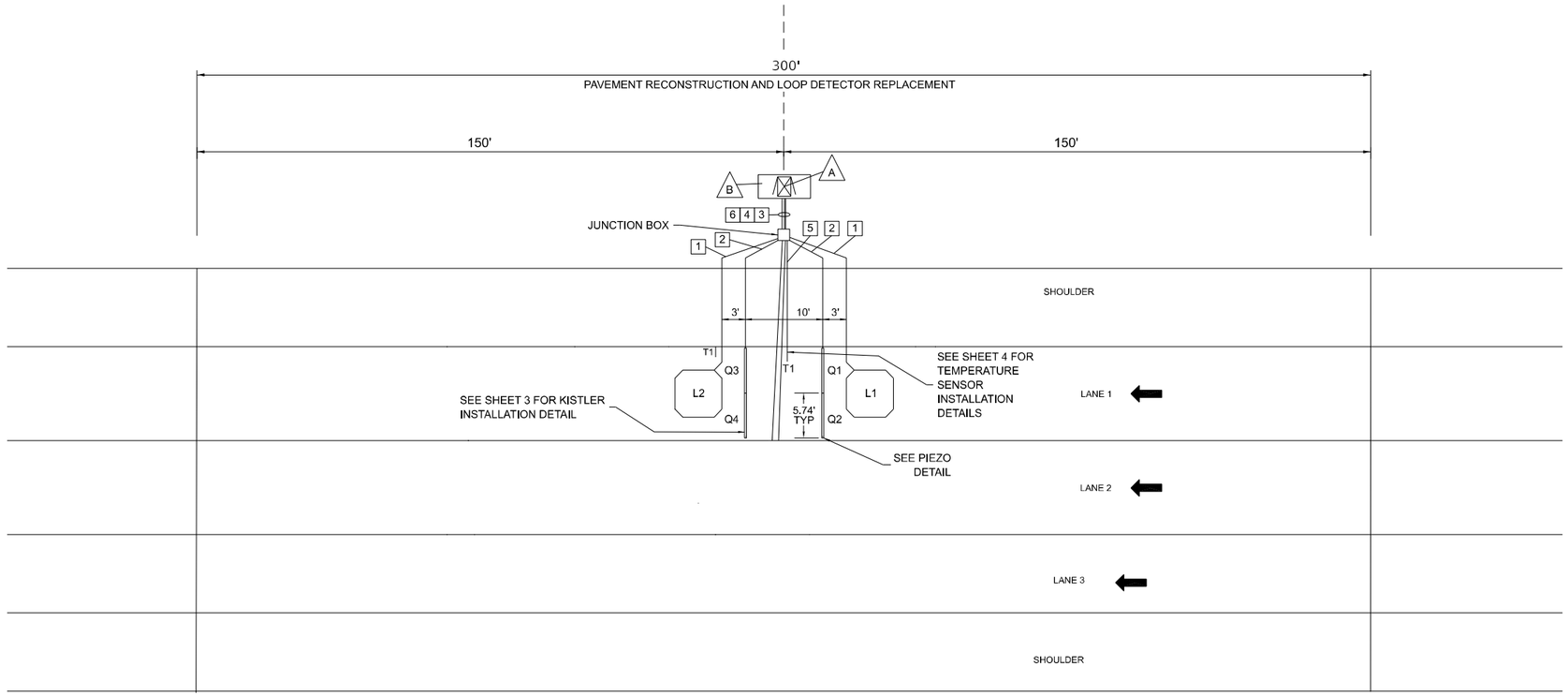

ATTENTION: WIM sensors shall be placed approximately 200' downstream

LEGEND:

L - INDUCTIVE LOOP
Q - LINEAS * QUARTZ WIM SENSOR BY KISTLER
T - TEMPERATURE SENSOR

NOTES: (THIS SHEET ONLY)

A. CABINET WITH WIM ELECTRONICS.

B. CABINET BASE.

C. PAVEMENT ON EITHER SIDE OF EACH SENSOR MUST BE FREE OF JOINTS AND CRACKS FOR 2'.

D. CONDUIT SHALL BE PLACED USING BORING, JACKING OR ALTERNATIVE METHOD THAT DOES NOT REQUIRE THE SURFACE OF THE ROAD TO BE CUT.

SIGNAL CONDUITS: (THIS SHEET ONLY)

1 — 1" CONDUIT
1 - LOOP LEAD

2 — 1" CONDUIT
2 - LINEAS * QUARTZ WIM SENSORS BY KISTLER LEADS

3 — 2" CONDUIT
2 - LOOP LEADS
4 - LINEAS * QUARTZ WIM SENSORS BY KISTLER LEADS
1 - TEMPERATURE SENSOR LEAD

4 — 2" CONDUIT
2 - LOOP LEADS
4 - LINEAS * QUARTZ WIM SENSORS BY KISTLER LEADS

5 — 1" CONDUIT
1 - TEMPERATURE SENSOR LEAD

6 — 2" CONDUIT
SPARE

GENERAL NOTES:

1. ALL CONNECTIONS BETWEEN SENSORS AND LEAD CABLES ARE DONE IN HANDHOLE AND ARE SOLDERED THEN SEALED FOR WATERPROOFING. NUMBER AND PLACEMENT OF HANDHOLES NOT SHOWN.
2. POWER CABLES MUST BE RUN IN SEPARATE CONDUITS / HANDHOLES FROM SIGNAL CABLES.
3. SENSOR SPACING SHOWN IS TYPICAL SPACING REQUIREMENT. ACTUAL SENSOR SPACING MAY BE ALTERED TO SUIT SITE CONDITIONS BY THE MFR FIELD REPRESENTATIVE.
4. SITE CONDITIONS MUST MEET CURRENT ASTM E1318 REQUIREMENTS TO ACHIEVE OPTIMAL WIM SYSTEM PERFORMANCE.
5. CABLES MUST BE PROTECTED BY PVC SLEEVES WHERE THEY CROSS PAVEMENT JOINTS/CRACKS.
6. ADDITIONAL DRAINAGE MAY BE REQUIRED DEPENDING ON SLOPE OF ROADWAY. DRAINAGE CONSISTS OF 1-1/2" ABS PIPE SLOPED TO RIP RAP DRAINAGE PIT IN DITCH.
7. TEMPERATURE SENSOR MUST BE INSTALLED AS SHOWN IN DRAWING.
8. MFR RECOMMENDS THAT HANDHOLES BE NO FURTHER THAN 200' APART. MFR RECOMMENDS THE MINIMUM SIZE FOR HANDHOLES IS 18" X 18" X 12".
9. SEPARATE CONDUITS AND HANDHOLES MUST BE USED FOR AC POWER AND LOW VOLTAGE SIGNAL / FIBER OPTIC CABLES.
10. EXACT ROUTING OF CONDUIT TO BE DETERMINED ON SITE. CONDUITS ARE LABELED LEFT TO RIGHT, TOP TO BOTTOM.
11. SENSORS SHALL BE PLACED ON THE FINAL BITUMINOUS SURFACE LIFT.
12. SENSORS SHALL ONLY BE PLACED IN THE DRIVING LANES (LANE 1)
13. THE CONTRACTOR SHALL ADHERE TO BDE SPEC SURFACE TESTING OF PAVEMENTS-IRI FOR 200' ON EACH SIDE OF THE WIM SENORS.
14. DRAWING NOT TO SCALE.
15. THE PROPOSED WEIGH IN MOTION LOOPS SHALL BE INSTALLED AT APPROXIMATELY THE SAME LOCATION AS EXISTING, AS DETERMINED BY THE ENGINEER.

MODEL: detail[$$sheet]
FILE NAME: p:\2020\2020068\01 ol\DT\DS\PRPT\01 Ft 66 ISB M64\Mgt\M_PA4\Rpt\Rep\ch2\QJ\SCAds\SHe2\M5\h-2-1\Mdgn\HD\P68\07\4\B24\R\B24\MoMoMeugh\Motion.dgn

Farnsworth GROUP

USER NAME = rstaley	DESIGNED -	REVISED -	
	DRAWN -	REVISED -	
PLOT SCALE = 0.16666633 ' / in.	CHECKED - GAC	REVISED -	
PLOT DATE = 8/27/2024	DATE - 06/14/24	REVISED -	

STATE OF ILLINOIS
DEPARTMENT OF TRANSPORTATION

WEIGH IN MOTION DETAIL

SCALE: N.T.S. | SHEET 1 OF 4 SHEETS | STA. ___+__.__ TO STA. ___+__.__

F.A.I RTE.	SECTION	COUNTY	TOTAL SHEETS	SHEET NO.
64	82-7WRS-2	ST CLAIR	691	485
		CONTRACT NO. 76K74		
		ILLINOIS	FED. AID PROJECT	

CABLE ROUTING DETAILS

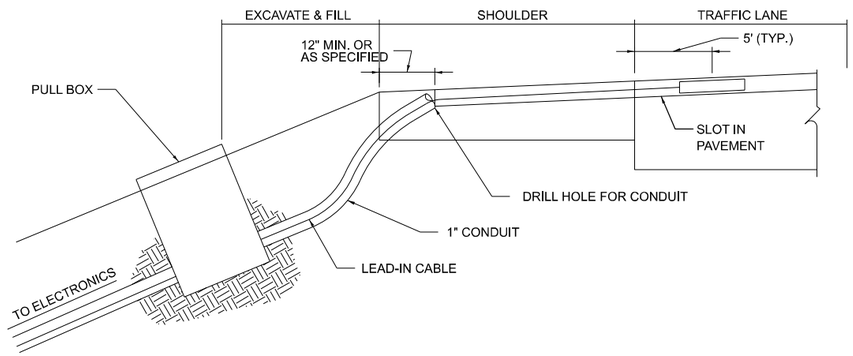

OCTAGONAL LOOP DIMENSION DETAIL

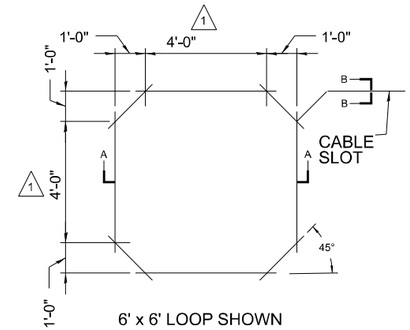

6' x 6' LOOP SHOWN

SQUARE LOOP DIMENSION DETAIL

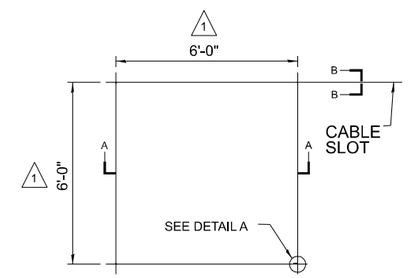

6' x 6' LOOP SHOWN

DETAIL A

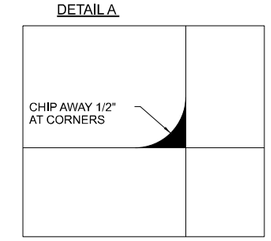

SECTION A-A

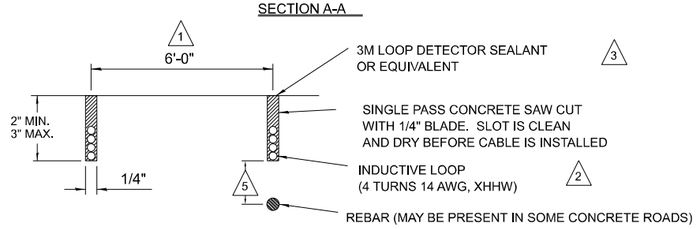

SECTION B-B

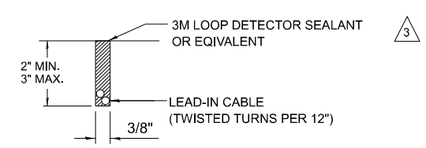

NOTES:

1. LOOP SIZE AS SPECIFIED ON SITE LAYOUT.
2. NUMBER OF TURNS AS SPECIFIED ON SITE LAYOUT.
3. USE CAULKING GUN PER MANUFACTURER'S SPECIFICATIONS
4. LOOP INSTALLATION PER MANUFACTURER'S MANUALS - PERMANENT OCTAGON LOOPS
5. IF THE LOOP IS INSTALLED OVER REBAR, THERE MUST BE A MINIMUM OF 2 INCHES OF CONCRETE BELOW AND A MINIMUM OF 1 INCH OF FILL ABOVE THE WIRES.
6. CORE DRILL OR CUT NOTCH IN PAVED SHOULDER FOR SWEEP. PLUG SWEEP OPENING, COVER WITH LOOP SEALANT.
7. NON-METALLIC FLEX OR PVC CONDUIT.

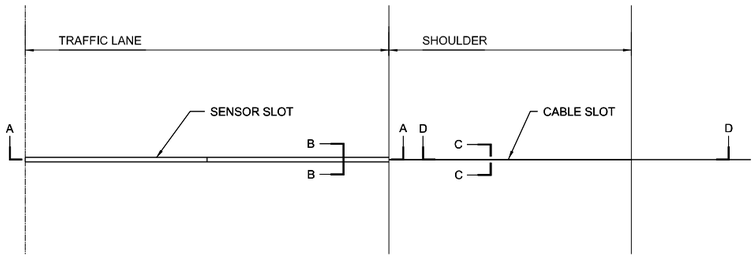

CABLE ROUTING DETAILS

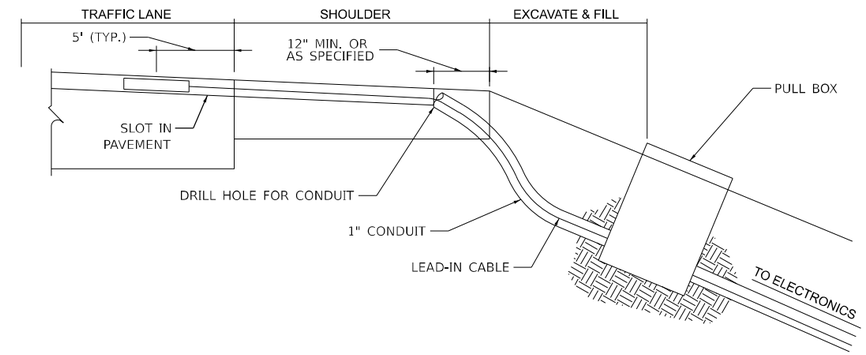

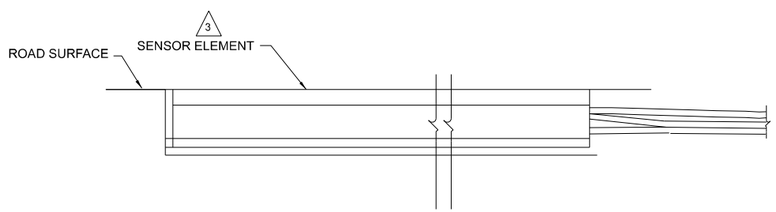

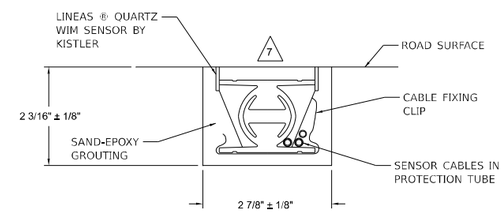

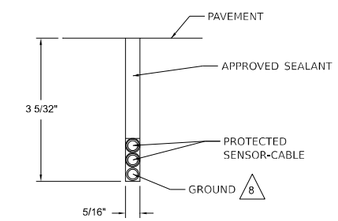

1. FOR INSTALLATION PROCESS REFER TO MANUFACTURERS INSTALLATION MANUAL.
2. SLOT LENGTH IS 6 [152] LONGER THAN SENSOR.
3. SET SENSOR FLUSH WITH OR SLIGHTLY HIGHER THAN ROAD SURFACE USING INCLUDED LEVELING BEAMS.
4. CHECK THE RESISTANCE OF THE SENSOR BY PLACING A DIGITAL MULTIMETER ACROSS THE CENTER CONDUCTOR OF THE BNC CONNECTOR AND THE OUTER BODY. THE READING SHOULD BE INFINITY.
5. CHECK THE VOLTAGE OUTPUT OF THE SENSOR BY MONITORING THE METER WHEN A TRUCK PASSES OVER THE SENSOR INSTALLED IN THE ROADWAY. AS THE TRUCK PASSES OVER THE SENSOR, VOLTAGE DEFLECTION SHOULD BE OBSERVED.
6. CRACKS OR SAW CUTS IN THE ROADWAY MUST NOT BE LOCATED CLOSER THAN 18 [450] UPSTREAM AND 18 [450] DOWNSTREAM OF THE SENSOR.
7. SENSOR MUST BE GROUND FLUSH WITH ROAD SURFACE AFTER GROUT HAS CURED.
8. IF SIGNIFICANT NOISE SOURCES ARE IDENTIFIED, OVERHEAD POWER SOURCES ETC., CONNECT OPTIONAL GROUND WIRE AS PER 690359 SECTION 4.5. OTHER END OF GROUND WIRE CONNECTS TO CABINET GROUND BUSBAR.
9. CORE DRILL OR CUT NOTCH IN PAVED SHOULDER FOR SWEEP. PLUG SWEEP OPENING, COVER WITH LOOP SEALANT.

INSTALLATION DETAILS - IN ROAD TEMPERATURE SENSOR

PLAN VIEW - SENSOR INSTALLATION

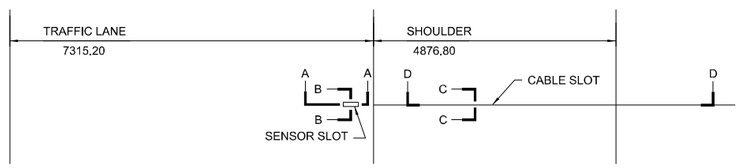

CABLE ROUTING DETAILS

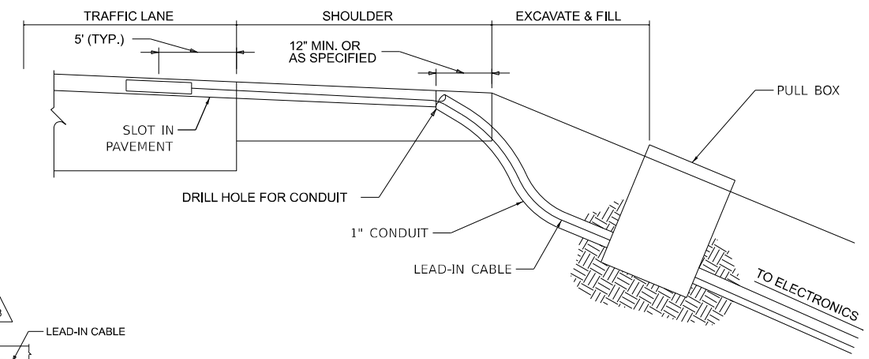

SENSOR P/N 170471
SECTION A-A

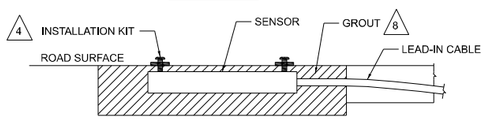

SENSOR P/N 170695-XX
SECTION A-A

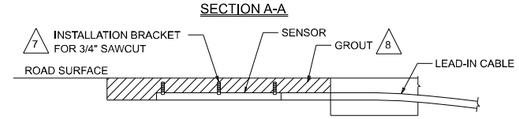

SECTION B-B

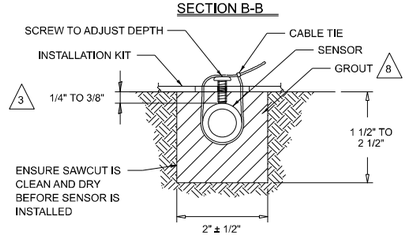

SECTION B-B

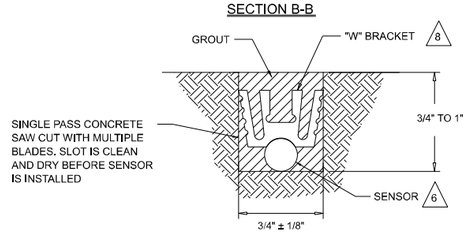

SECTION C-C

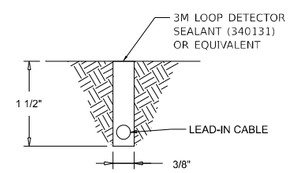

1 CRACKS OR SAW CUTS IN THE ROADWAY MUST NOT BE LOCATED CLOSER THAN 18" UPSTREAM AND 18" DOWNSTREAM OF THE TEMPERATURE SENSOR.

2 SLOT LENGTH IS 4" LONGER THAN SENSOR.

3 SET THE SENSOR AT THE CORRECT DEPTH.

4 PLACE A BRACKET AT EACH END OF THE SENSOR,

5 LOCATE SENSOR IN SAME PAVEMENT AND WITHIN 6' OF THE TEMPERATURE COMPENSATED DEVICE. AVOID PLACING IN WHEEL PATH.

6 WEDGE SENSOR AGAINST FLOOR OF CUT UNDER "W" CLIP (P/N 480275).

7 SPACE THREE BRACKETS (P/N 480275) EVENLY OVER THE LENGTH OF THE SENSOR,

8 USE GROUT OF SAME TYPE AS THAT OF SENSOR BEING COMPENSATED:
PIEZO - USE AS475 (340028) OR PU200 (IT2000285)
KISTLER - USE KISTLER GROUT (340139) OR FLEXOLITH (340082)

9 CORE DRILL OR CUT NOTCH IN PAVED SHOULDER FOR SWEEP. PLUG SWEEP OPENING, COVER WITH LOOP SEALANT.

MODEL: Detail 4 [Sheet]
FILE NAME: J:\2020\020658.10 - IDOT D8-PTB 196 Item 56 I-64 Widening\34_Drawings\DGN\CAD_Sheets\17-2 Weigh In Motion\D876K74-dh-WeighIn-Motion.dgn

USER NAME = rstalley	DESIGNED -	REVISED -	
	DRAWN -	REVISED -	
PLOT SCALE = 0.16666633 ' / in.	CHECKED -	REVISED -	
PLOT DATE = 8/27/2024	DATE -	REVISED -	

STATE OF ILLINOIS
DEPARTMENT OF TRANSPORTATION

WEIGH IN MOTION
DETAIL

SCALE: N.T.S. | SHEET 4 OF 4 SHEETS | STA. ___+__.__ TO STA. ___+__.__

F.A.I. RTE.	SECTION	COUNTY	TOTAL SHEETS	SHEET NO.
64	82-7WRS-2	ST. CLAIR	691	488
		CONTRACT NO. 76K74		
		ILLINOIS	FED. AID PROJECT	

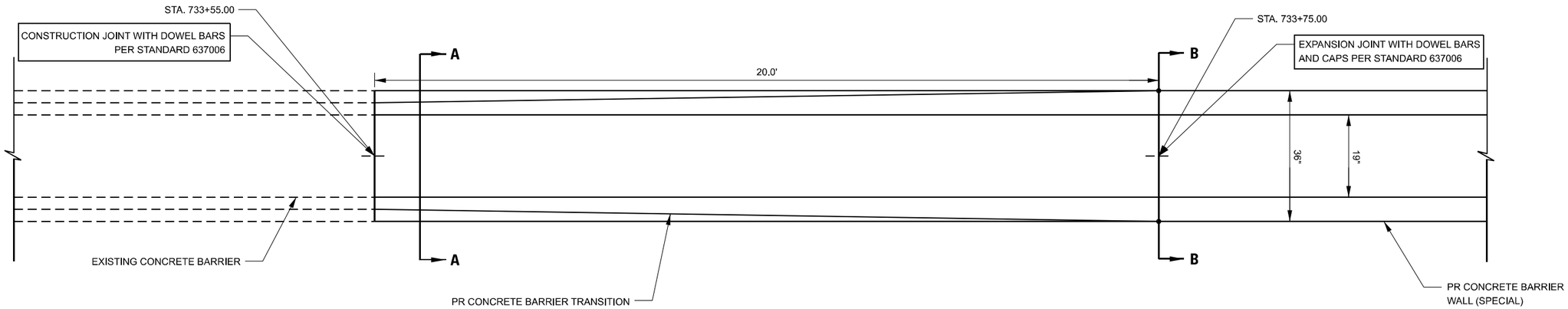

NOTE:
CONCRETE BARRIER TRANSITION BASE TO BE PAID FOR AS CONCRETE BARRIER BASE PAY ITEM.

PLAN VIEW

20' TRANSITION

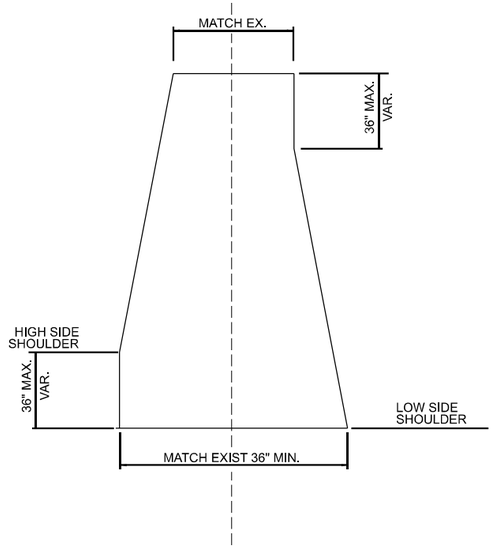

SECTION A-A

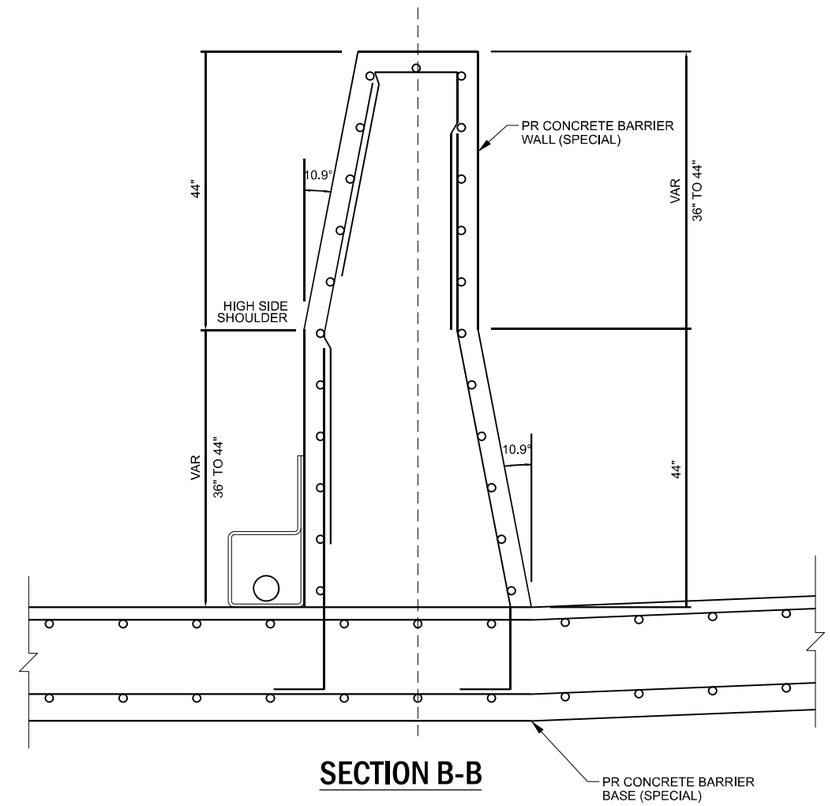

SECTION B-B

CONCRETE BARRIER TRANSITION FROM CONCRETE BARRIER WALL (SPECIAL) TO EXISTING CONCRETE BARRIER

(N.T.S.)

MODEL: Details-1 [Sheet]
FILE NAME: J:\2020\2200698.10 - IDOT D8-PTB 196 Item 56 I-64 Widening\04_Drawings\DGN\CAD_Sheets\20 Misc Details\D876K74-sht-detail 01-MedianBarrierTransition STA 744+15.dgn

Farnsworth GROUP

USER NAME = rstaley	DESIGNED - RWS	REVISED -	
	DRAWN - RWS	REVISED -	
PLOT SCALE = 0.16666633 ' / in.	CHECKED - ERB	REVISED -	
PLOT DATE = 10/15/2024	DATE - 10/15/24	REVISED -	

STATE OF ILLINOIS
DEPARTMENT OF TRANSPORTATION

F.A.I. ROUTE 64 (I–64)
MISCELLANEOUS DETAILS

SCALE: N.T.S. | SHEET 1 OF 2 SHEETS | STA. ___+__.__ TO STA. ___+__.__

F.A.I RTE.	SECTION	COUNTY	TOTAL SHEETS	SHEET NO.
64	82-7WRS-2	ST CLAIR	691	489
		CONTRACT NO. 76K74		
		ILLINOIS	FED. AID PROJECT	

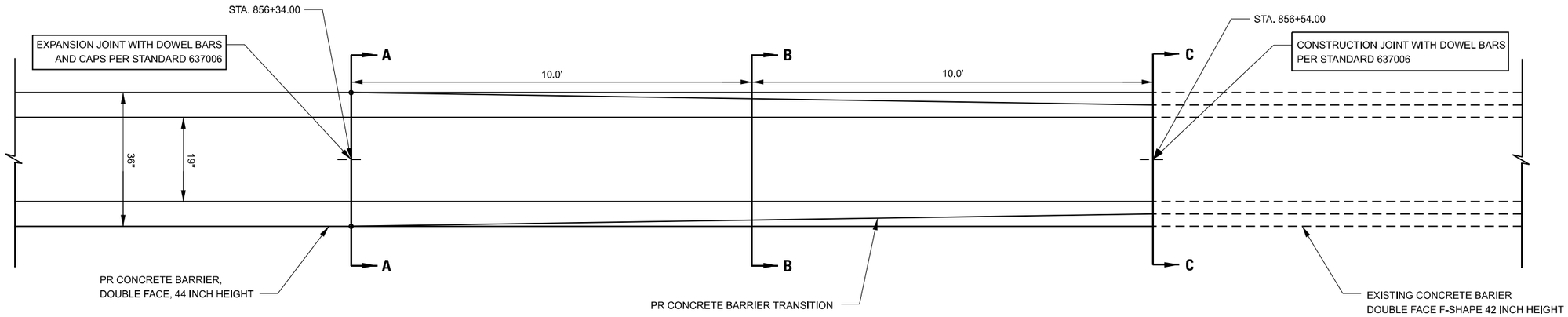

NOTE:
CONCRETE BARRIER TRANSITION BASE TO BE PAID FOR AS CONCRETE BARRIER BASE PAY ITEM.

PLAN VIEW

20' TRANSITION

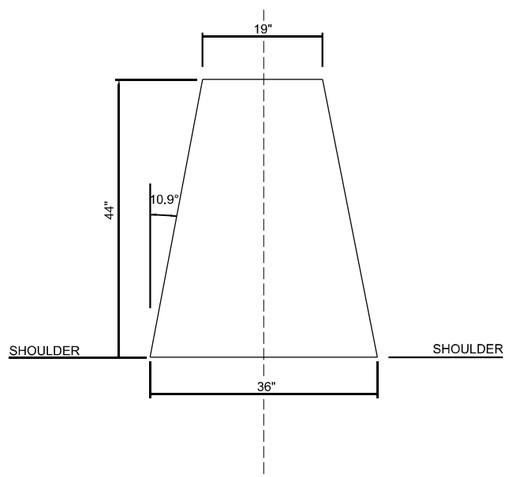

SECTION A-A

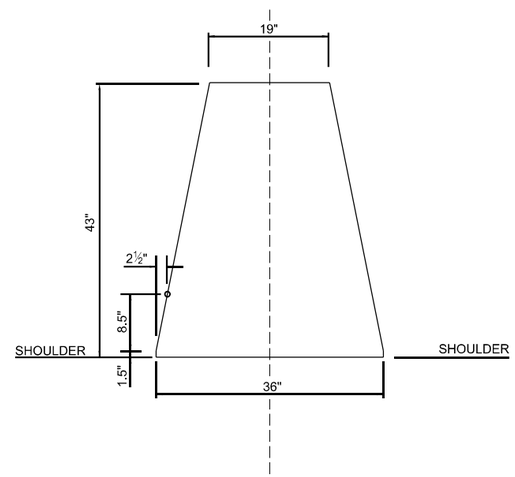

SECTION B-B

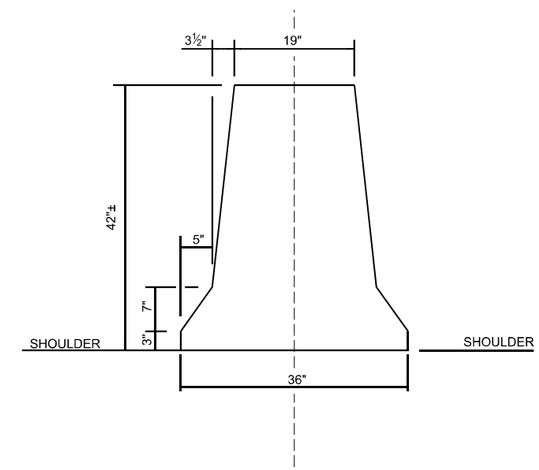

SECTION C-C

CONCRETE BARRIER TRANSITION FROM DOUBLE FACE 44 INCH HEIGHT TO DOUBLE FACE 42 INCH HEIGHT

(N.T.S.)

MODEL: Details -1 [Sheet]
FILE NAME: J:\2020\0200698.10 - IDOT D8-PTB 196 Item 56 I-64 Widening\04_Drawings\DGN\CAD_Sheets\20 Misc Details\D876K74-sht-detail 02-MedianBarrierTransition STA 855+34.dgn

Farnsworth GROUP

USER NAME = rstaley	DESIGNED - RWS	REVISED -	STATE OF ILLINOIS DEPARTMENT OF TRANSPORTATION
	DRAWN - RWS	REVISED -	
PLOT SCALE = 0.16666633 ' / in.	CHECKED - ERB	REVISED -	
PLOT DATE = 10/15/2024	DATE - 10/15/24	REVISED -	

F.A.I. ROUTE 64 (I–64)
MISCELLANEOUS DETAILS

SCALE: N.T.S. | SHEET 2 OF 2 SHEETS | STA. 726+72.10 TO STA. 868+92.73

F.A.I RTE.	SECTION	COUNTY	TOTAL SHEETS	SHEET NO.
64	82-7WRS-2	ST CLAIR	691	490
		CONTRACT NO. 76K74		
		ILLINOIS	FED. AID PROJECT	

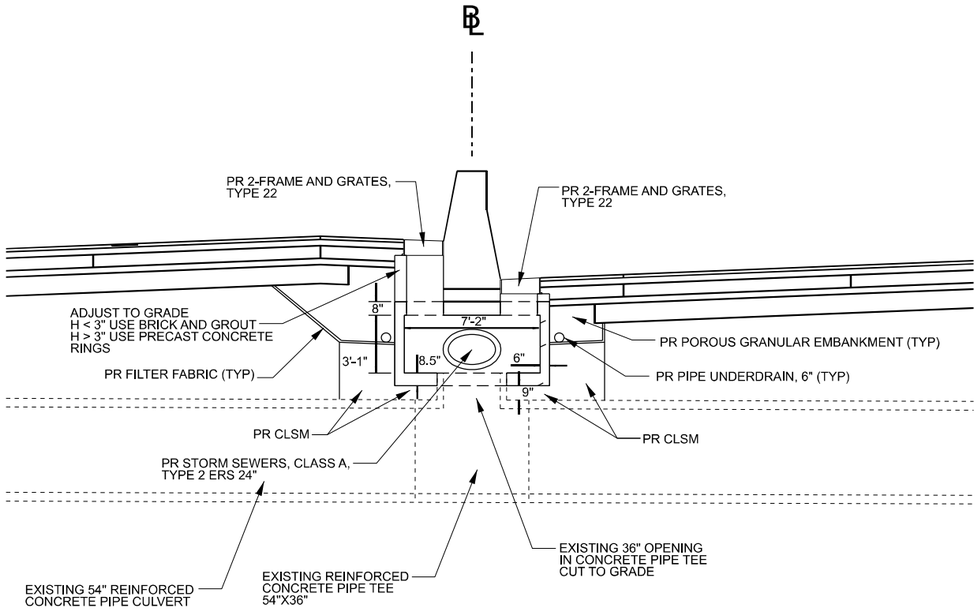

DRAINAGE STRUCTURE, TYPE 5 (SPECIAL)
SECTION A–A

STA. - 750+39.00
STA. - 750+49.00

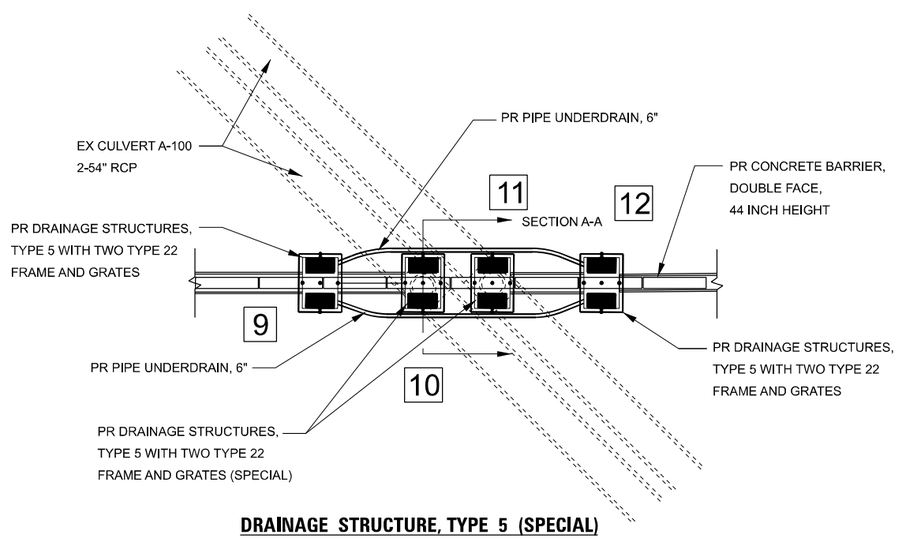

DRAINAGE STRUCTURE, TYPE 5 (SPECIAL)
PLAN

MODEL: Details - 16 (Sheet)
FILE NAME: J:\2020\0200698.10 - IDOT D8-PTB 196 Item 56 I-64 Widening\04_Drawings\DGN\CAD_Sheets\20 Misc Details\D876K74-sht-detail 03-DrainageStructureSTA750+39.dgn

Farnsworth GROUP

USER NAME = rstaley	DESIGNED - WLB	REVISED -	STATE OF ILLINOIS DEPARTMENT OF TRANSPORTATION
	DRAWN - WLB	REVISED -	
PLOT SCALE = 0.16666633 ' / in.	CHECKED - ERB	REVISED -	
PLOT DATE = 10/15/2024	DATE - 10/15/24	REVISED -	

F.A.I ROUTE 64 (I–64)
MISCELLANEOUS DETAILS

SCALE: N.T.S. | SHEET 1 OF 1 SHEETS | STA. 726+72.10 TO STA. 868+92.73

F.A.I RTE.	SECTION	COUNTY	TOTAL SHEETS	SHEET NO.
64	82-7WRS-2	ST CLAIR	691	491
		CONTRACT NO. 76K74		
	ILLINOIS	FED. AID PROJECT		

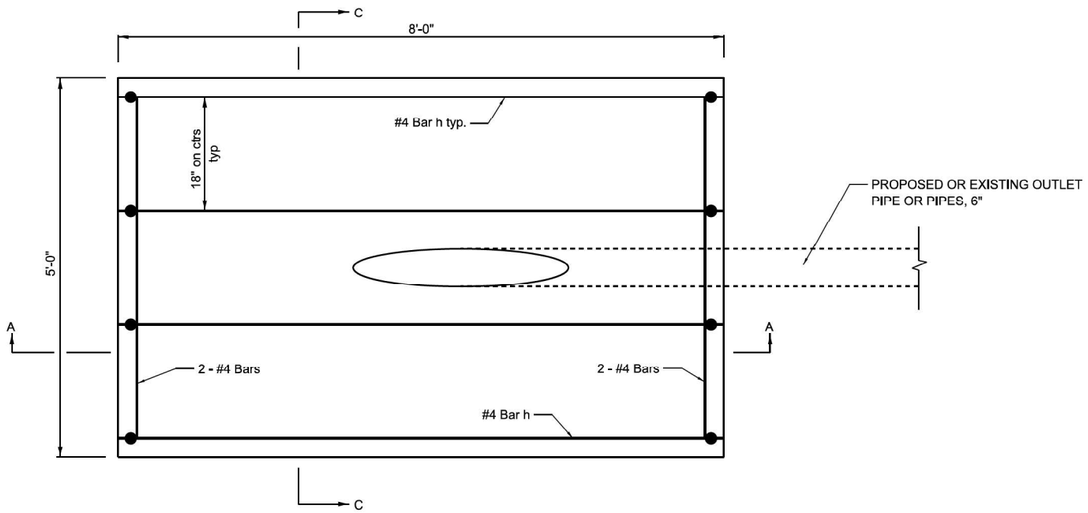

PLAN VIEW

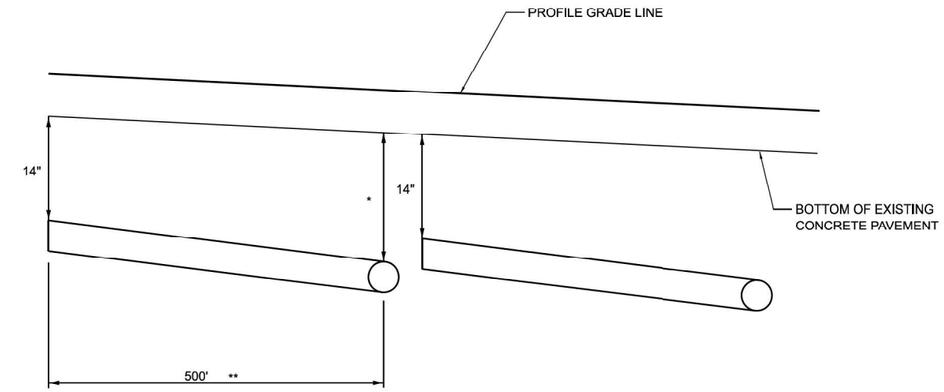

* DEPTH OF OUTLET DETERMINED BY SLOPE
** UNLESS OTHERWISE NOTED IN THE PLANS

PIPE UNDERDRAIN DETAIL

(USE WHEN PGL IS LESS THAN 0.4%)

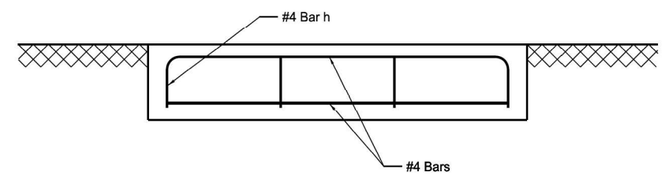

SECTION C-C

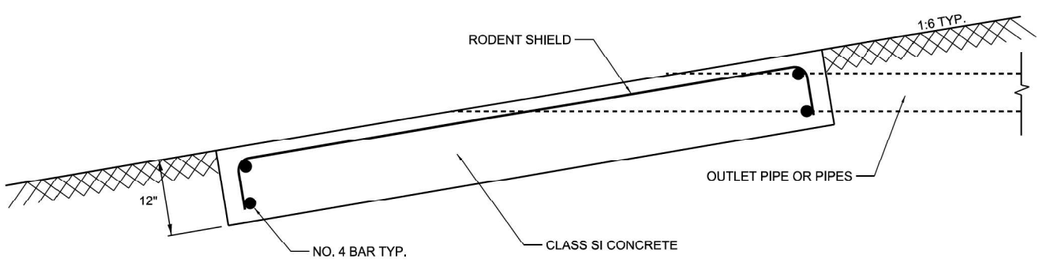

SECTION A-A

APPROXIMATE OUTLET PROTECTOR QUANTITIES FOR EACH OUTLET PROTECTOR	
CONCRETE, CLASS SI	1.5 CU YD
REINFORCING STEEL	35.6 LB

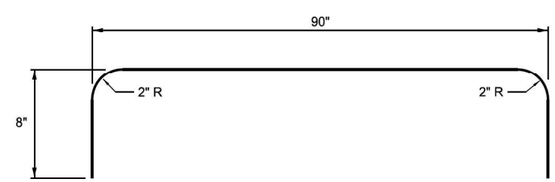

#4 h Bar

NOTES

SEE STANDARD 601101 FOR DETAILS OF RODENT SHEILDS.

THE OUTLET PIPE OR PIPES SHALL BE LOCATED AS CLOSE AS POSSIBLE TO THE CENTER OF THE OUTLET PROTECTOR.

THE LAST 10 FEET OF OUTLET PIPE SHALL BE SCHEDULE 40 PVC.

REINFORCEMENT BARS MAY BE CUT OR RELOCATED TO ACCOMODATE PIPE.

CUT OUTLET PIPE ON A BEVE TO MATCH FINISHED SURFACE OF SURROUNDING PCC.

SEEDING CLASS 2 SHALL BE CONSIDERED INCLUDED IN THE COST OF THE PAY ITEMS.

CONCRETE HEADWALL SPECIAL

DETAILS
OUTLET PROTECTOR

MODEL: Details - 16 [Sheet]
FILE NAME: J:\2020\0200698.10 - IDOT D8-PTB 196 Item 56 I-64 Widening\04_Drawings\DGN\CAD_Sheets\20 Misc Details\D876K74-sht-detail 05-Concrete Headwall Special.dgn

Farnsworth GROUP

USER NAME = rstaley	DESIGNED - WLB	REVISED -	
	DRAWN - WLB	REVISED -	
PLOT SCALE = 0.16666633 ' / in.	CHECKED - ERB	REVISED -	
PLOT DATE = 10/15/2024	DATE - 10/15/24	REVISED -	

STATE OF ILLINOIS
DEPARTMENT OF TRANSPORTATION

F.A.I ROUTE 64 (I–64)
MISCELLANEOUS DETAILS

SCALE: N.T.S. | SHEET 1 OF 1 SHEETS | STA. 726+72.10 TO STA. 868+92.73

F.A.I RTE.	SECTION	COUNTY	TOTAL SHEETS	SHEET NO.
64	82-7WRS-2	ST CLAIR	691	492
		CONTRACT NO. 76K74		
		ILLINOIS	FED. AID PROJECT	

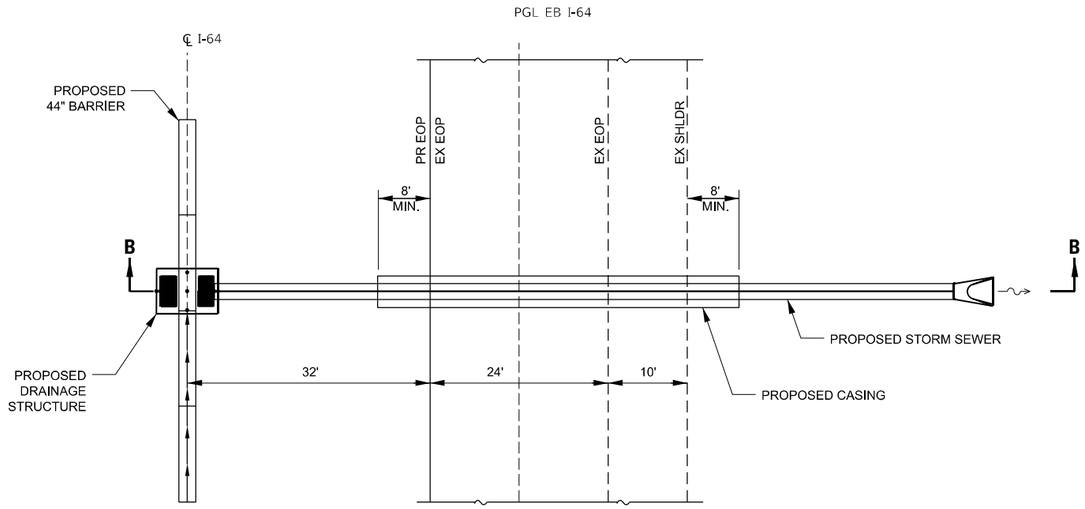

JACK AND BORE PIPE CROSSING PLAN

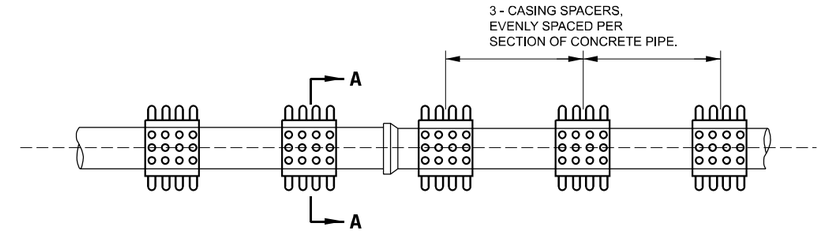

SPACING DETAIL

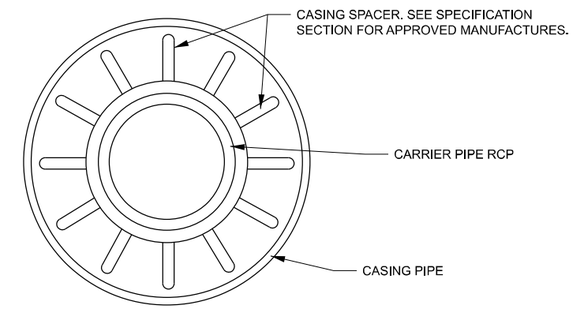

SECTION A-A

ENCASEMENT SPACER DETAILS FOR RCP IRON PIPE

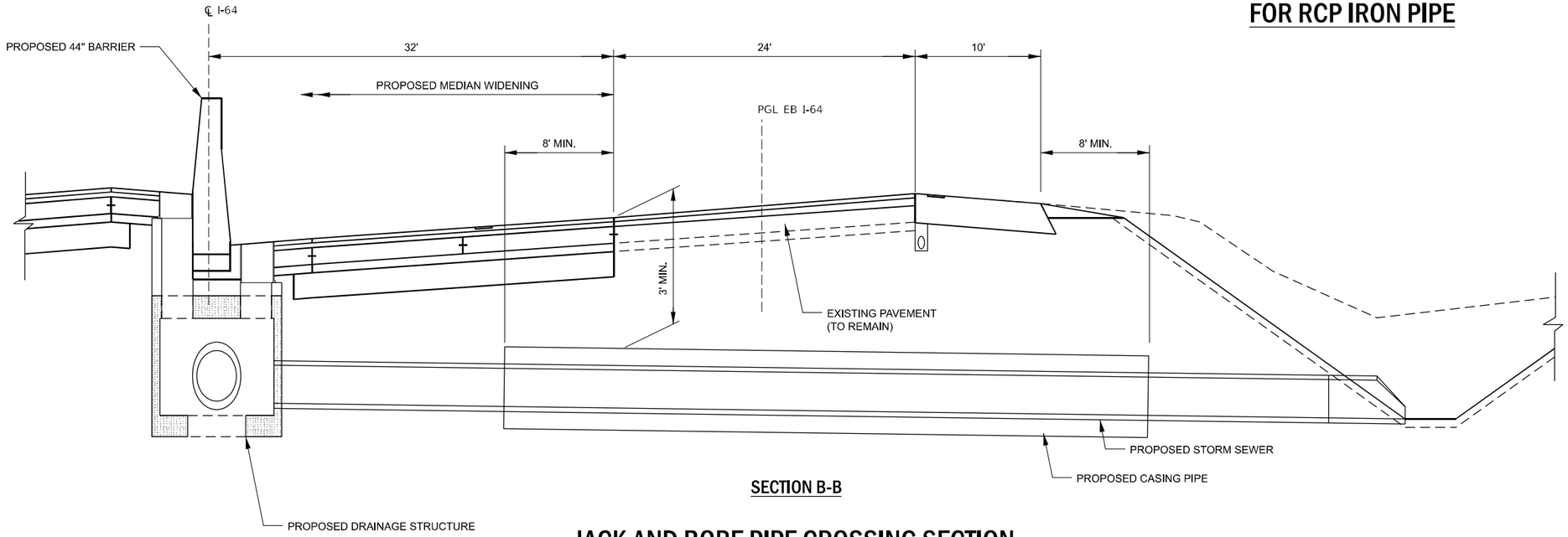

SECTION B-B

JACK AND BORE PIPE CROSSING SECTION

MODEL: Details -1 [Sheet]
FILE NAME: J:\2020\0200698.10 - IDOT DB-PTB 196 Item 56 I-64 Widening\04_Drawings\DGN\CAD_Sheets\20 Misc Details\D876K74-sht-detail 04-jack and Bore Detail.dgn

Farnsworth GROUP

USER NAME = rstaley	DESIGNED - RWS	REVISED -	
	DRAWN - RWS	REVISED -	
PLOT SCALE = 0.16666633 ' / in.	CHECKED - ERB	REVISED -	
PLOT DATE = 10/15/2024	DATE - 10/15/24	REVISED -	

STATE OF ILLINOIS
DEPARTMENT OF TRANSPORTATION

F.A.I. ROUTE 64 (I–64)
MISCELLANEOUS DETAILS

SCALE: N.T.S. | SHEET 1 OF 1 SHEETS | STA. ___+__.__ TO STA. ___+__.__

F.A.I RTE.	SECTION	COUNTY	TOTAL SHEETS	SHEET NO.
64	82-7WRS-2	ST CLAIR	691	493
		CONTRACT NO. 76K74		
		ILLINOIS	FED. AID PROJECT	

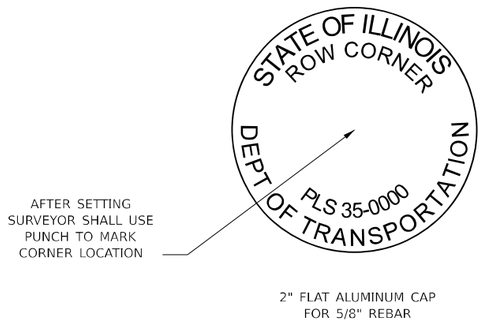

ALUMINUM CAP DESIGN DETAIL FOR RIGHT–OF–WAY AND PERMANENT EASEMENT CORNERS

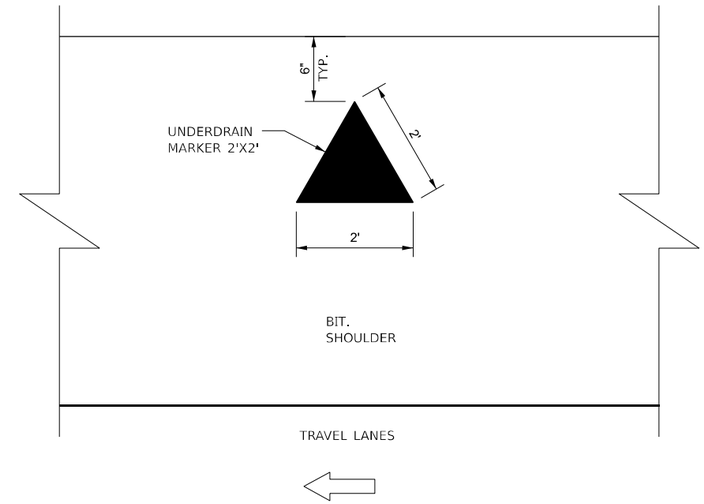

TYPICAL UNDERDRAIN HEADWALL MARKER DETAIL

NOTE:
PROVIDE WHITE TRIANGLE IN SHOULDER TO MARK LOCATION OF EACH UNDERDRAIN OUTLET PIPE. TRIANGULAR PAVEMENT MARKINGS SHALL BE PAID FOR AS PREFORMED PLASTIC PAVEMENT MARKING, TYPE D - STANDARD - LETTERS AND SYMBOLS. SEE SCHEDULE OF QUANTITIES FOR LOCATIONS OF UNDERDRAIN OUTLETS.

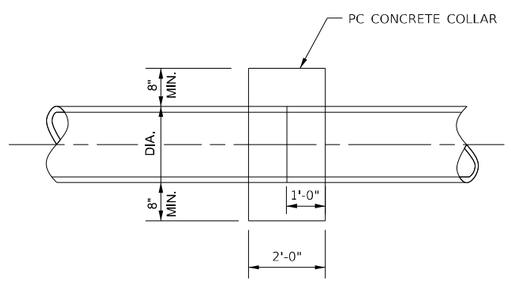

CONCRETE COLLAR DETAIL

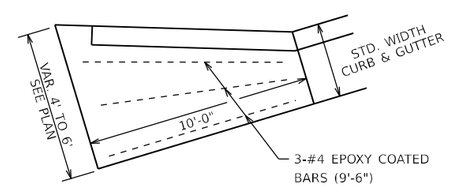

PLAN VIEW

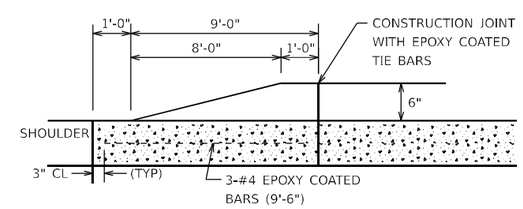

SIDE VIEW

CONCRETE CURB AND GUTTER OUTLET

N.T.S.

MODEL: Details - 16 (Sheet)
FILE NAME: J:\2020\0200698.10 - IDOT D8-PTB 196 Item 56 I-64 Widening\04_Drawings\DGN\CAD_Sheets\20 Misc Details\D876K74-ctc-detail 06-ROW Aluminum Cap.dgn

Farnsworth GROUP

USER NAME = rstaley	DESIGNED - WLB	REVISED -	
	DRAWN - WLB	REVISED -	
PLOT SCALE = 0.16666633 ' / in.	CHECKED - ERB	REVISED -	
PLOT DATE = 10/15/2024	DATE - 10/15/24	REVISED -	

STATE OF ILLINOIS
DEPARTMENT OF TRANSPORTATION

F.A.I ROUTE 64 (I–64)
MISCELLANEOUS DETAILS

SCALE: N.T.S. | SHEET 1 OF 1 SHEETS | STA. ___+__.__ TO STA. ___+__.__

F.A.I RTE.	SECTION	COUNTY	TOTAL SHEETS	SHEET NO.
64	82-7WRS-2	ST CLAIR	691	494
		CONTRACT NO. 76K74		
	ILLINOIS	FED. AID PROJECT		

SLOPE STEPS BENCHING DETAIL

TYPICAL CROSS SECTION EMBANKMENT
AND FURNISHED EXCAVATION CONSTRUCTION
ON SIDEHILL OR SLOPE

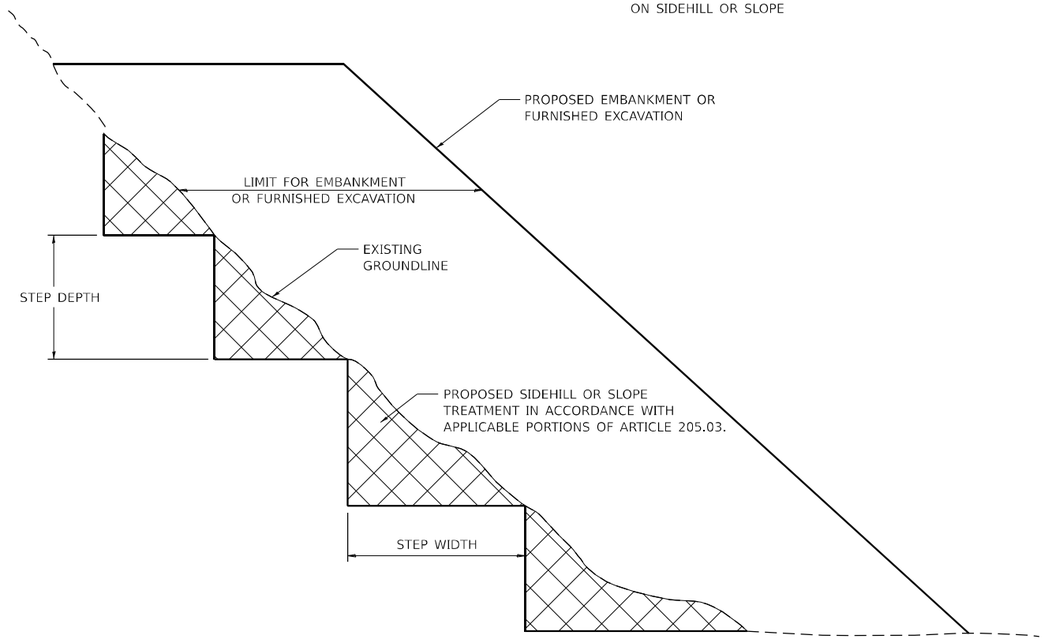

REPLACEMENT MATERIAL:

SEE NOTE #3 ON THIS SHEET.

GENERAL NOTES:

1. SLOPE STEPS WILL BE REQUIRED FOR ALL 12" MINIMUM THICKNESS "SLIVER FILLS" AND ON ALL FILLS WITH A HEIGHT OF 10 FEET OR GREATER.
2. THE STEP WIDTH SHALL BE TYPICALLY TWICE THE STEP DEPTH.
3. ALL WORK DUE TO EXCAVATION OF SLOPE STEPS, EMBANKMENT WITHIN SLOPE STEPS, AND ADDITIONAL EXCAVATION FOR BENCHING SHALL NOT BE MEASURED AND PAID FOR SEPARATELY BUT SHALL BE INCLUDED IN THE COST OF EARTH EXCAVATION.

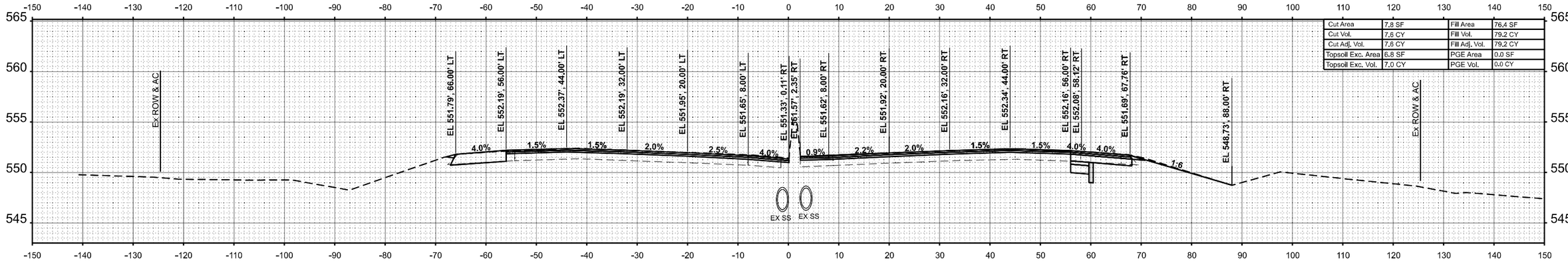

Cut Area	7.8 SF	Fill Area	76.4 SF
Cut Vol.	7.6 CY	Fill Vol.	79.2 CY
Cut Adj. Vol.	7.6 CY	Fill Adj. Vol.	79.2 CY
Topsoil Exc. Area	6.8 SF	PGE Area	0.0 SF
Topsoil Exc. Vol.	7.0 CY	PGE Vol.	0.0 CY

STA 727+00.00

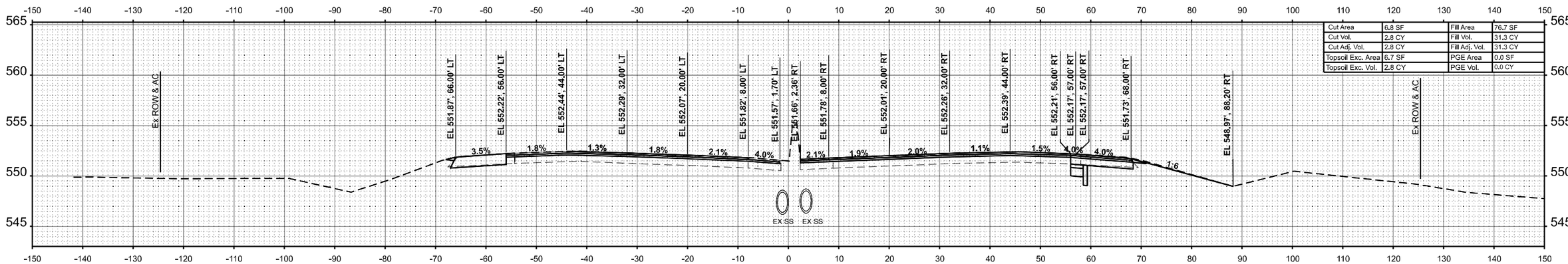

Cut Area	6.8 SF	Fill Area	76.7 SF
Cut Vol.	2.8 CY	Fill Vol.	31.3 CY
Cut Adj. Vol.	2.8 CY	Fill Adj. Vol.	31.3 CY
Topsoil Exc. Area	6.7 SF	PGE Area	0.0 SF
Topsoil Exc. Vol.	2.8 CY	PGE Vol.	0.0 CY

STA 726+72.10

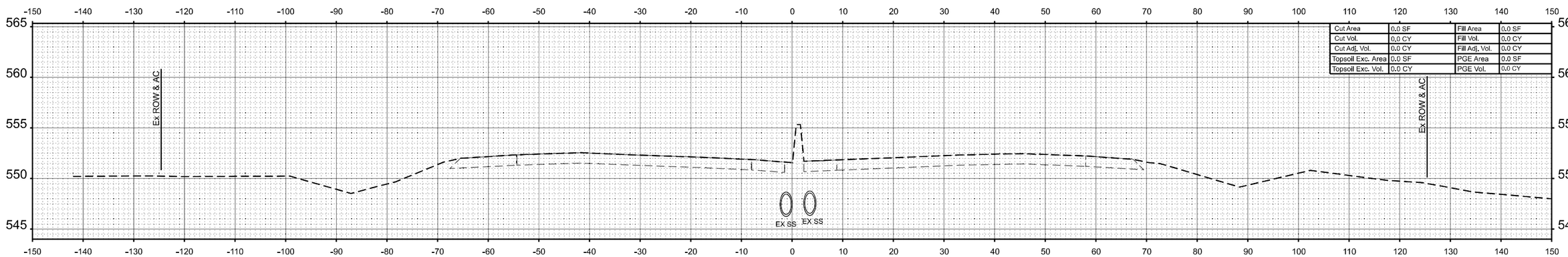

Cut Area	0.0 SF	Fill Area	0.0 SF
Cut Vol.	0.0 CY	Fill Vol.	0.0 CY
Cut Adj. Vol.	0.0 CY	Fill Adj. Vol.	0.0 CY
Topsoil Exc. Area	0.0 SF	PGE Area	0.0 SF
Topsoil Exc. Vol.	0.0 CY	PGE Vol.	0.0 CY

STA 726+50.00

FINAL SURVEY	BY	DATE
SURVEYED		
PLOTTED		
TEMPLATE		
AREAS		
AREAS CHECKED		
NOTE BOOK		
NO.		

ORIGINAL SURVEY	BY	DATE
SURVEYED		
PLOTTED		
TEMPLATE		
AREAS		
AREAS CHECKED		
NOTE BOOK		
NO.		

MODEL: I64WEST - 726+50.00
FILE NAME: C:\Users\jmarlin\OneDrive - Farnsworth Group, Inc\Desktop\Working Project Files\I-64\DGN\D876K74-sht-xs-Vol2-Widen1.dgn

Farnsworth GROUP

USER NAME = jmarlin	DESIGNED - JJO	REVISED -	
	DRAWN - JRM	REVISED -	
PLOT SCALE = 0.16666633 ' / in.	CHECKED - ERB	REVISED -	
PLOT DATE = 10/16/2024	DATE - 10/15/2024	REVISED -	

STATE OF ILLINOIS
DEPARTMENT OF TRANSPORTATION

F.A.I. ROUTE 64 (I-64)
CROSS SECTIONS

SCALE: 1:10H / 1:5V | SHEET 1 OF 151 SHEETS | STA. 726+50.00 TO STA. 727+00.00

F.A.I. RTE.	SECTION	COUNTY	TOTAL SHEETS	SHEET NO.
64	82-7WRS-2	ST CLAIR	691	496
		CONTRACT NO. 76K74		
	ILLINOIS	FED. AID PROJECT		

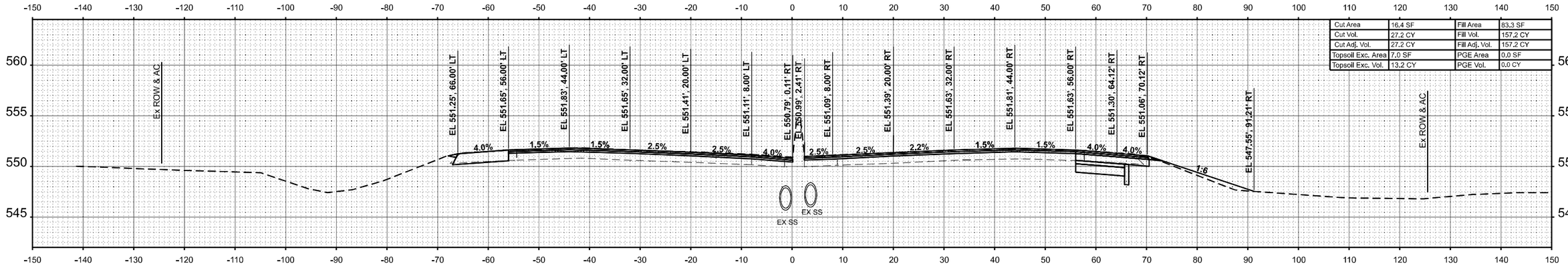

Cut Area	16.4 SF	Fill Area	83.3 SF
Cut Vol.	27.2 CY	Fill Vol.	157.2 CY
Cut Adj. Vol.	27.2 CY	Fill Adj. Vol.	157.2 CY
Topsoil Exc. Area	7.0 SF	PGE Area	0.0 SF
Topsoil Exc. Vol.	13.2 CY	PGE Vol.	0.0 CY

STA 728+50.00

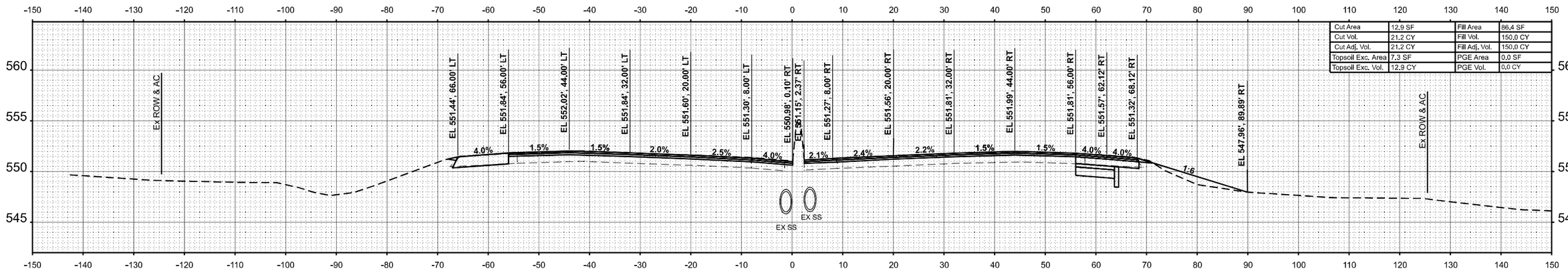

Cut Area	12.9 SF	Fill Area	86.4 SF
Cut Vol.	21.2 CY	Fill Vol.	150.0 CY
Cut Adj. Vol.	21.2 CY	Fill Adj. Vol.	150.0 CY
Topsoil Exc. Area	7.3 SF	PGE Area	0.0 SF
Topsoil Exc. Vol.	12.9 CY	PGE Vol.	0.0 CY

STA 728+00.00

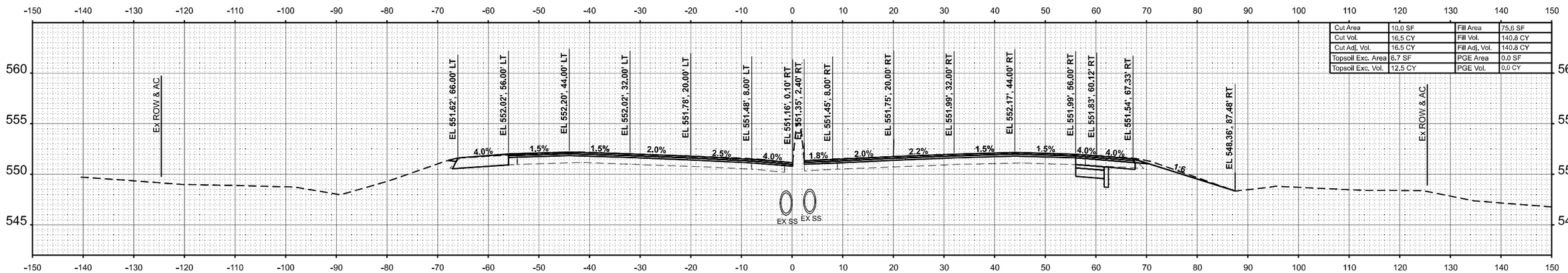

Cut Area	10.0 SF	Fill Area	75.6 SF
Cut Vol.	16.5 CY	Fill Vol.	140.8 CY
Cut Adj. Vol.	16.5 CY	Fill Adj. Vol.	140.8 CY
Topsoil Exc. Area	6.7 SF	PGE Area	0.0 SF
Topsoil Exc. Vol.	12.5 CY	PGE Vol.	0.0 CY

STA 727+50.00

FINAL SURVEY		BY	DATE
NOTE BOOK	SURVEYED		
	PLOTTED		
	TEMPLATE		
NO.	AREAS		
	AREAS CHECKED		

ORIGINAL SURVEY		BY	DATE
NOTE BOOK	SURVEYED		
	PLOTTED		
	TEMPLATE		
NO.	AREAS		
	AREAS CHECKED		

MODEL: I64WEST - 727+50.00
FILE NAME: C:\Users\jmarlin\OneDrive - Farnsworth Group, Inc\Desktop\Working Project Files\I-64\DGN\D397K7-Aesh-Vol-West-1.dgn

Farnsworth GROUP

USER NAME = jmarlin	DESIGNED - JJO	REVISED -	
	DRAWN - JRM	REVISED -	
PLOT SCALE = 0.16666633 ' / in.	CHECKED - ERB	REVISED -	
PLOT DATE = 10/16/2024	DATE - 10/15/2024	REVISED -	

STATE OF ILLINOIS
DEPARTMENT OF TRANSPORTATION

F.A.I. ROUTE 64 (I-64)
CROSS SECTIONS

SCALE: 1:10H / 1:5V | SHEET 2 OF 151 SHEETS | STA. 727+50.00 TO STA. 728+50.00

F.A.I. RTE.	SECTION	COUNTY	TOTAL SHEETS	SHEET NO.
64	82-7WRS-2	ST CLAIR	691	497
		CONTRACT NO. 76K74		
	ILLINOIS	FED. AID PROJECT		

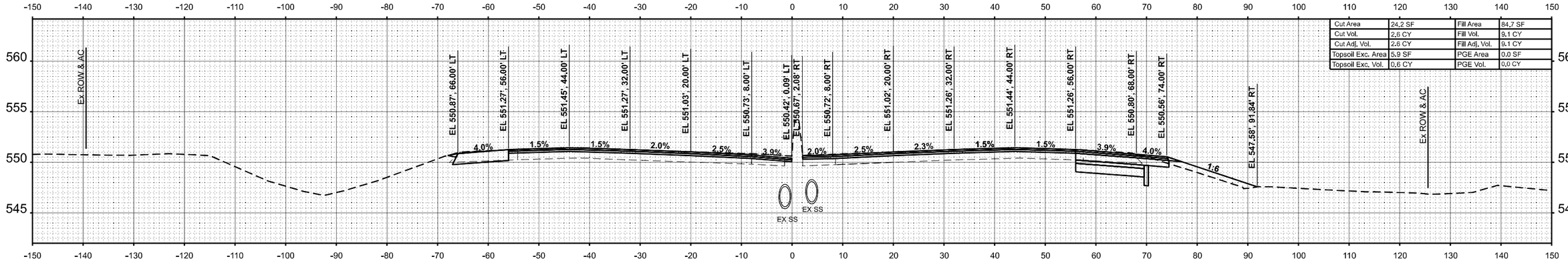

Cut Area	24.2 SF	Fill Area	84.7 SF
Cut Vol.	2.6 CY	Fill Vol.	9.1 CY
Cut Adj. Vol.	2.6 CY	Fill Adj. Vol.	9.1 CY
Topsoil Exc. Area	5.9 SF	PGE Area	0.0 SF
Topsoil Exc. Vol.	0.6 CY	PGE Vol.	0.0 CY

STA 729+50.00

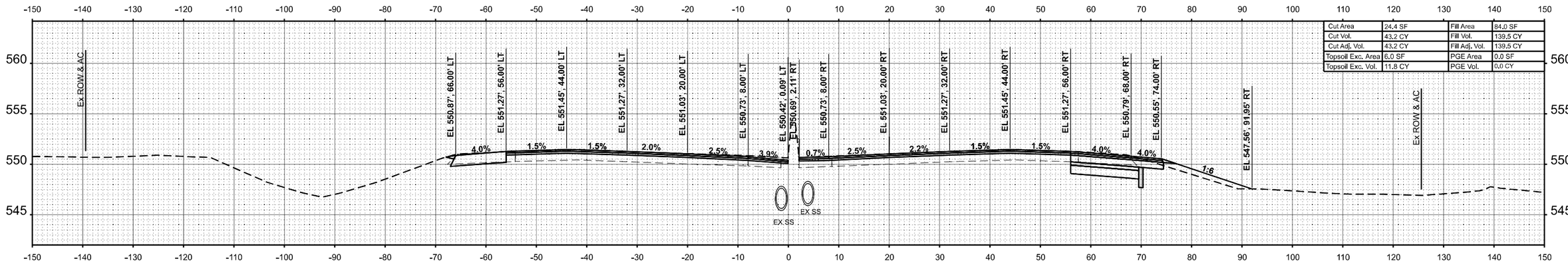

Cut Area	24.4 SF	Fill Area	84.0 SF
Cut Vol.	43.2 CY	Fill Vol.	139.5 CY
Cut Adj. Vol.	43.2 CY	Fill Adj. Vol.	139.5 CY
Topsoil Exc. Area	6.0 SF	PGE Area	0.0 SF
Topsoil Exc. Vol.	11.8 CY	PGE Vol.	0.0 CY

STA 729+47.08

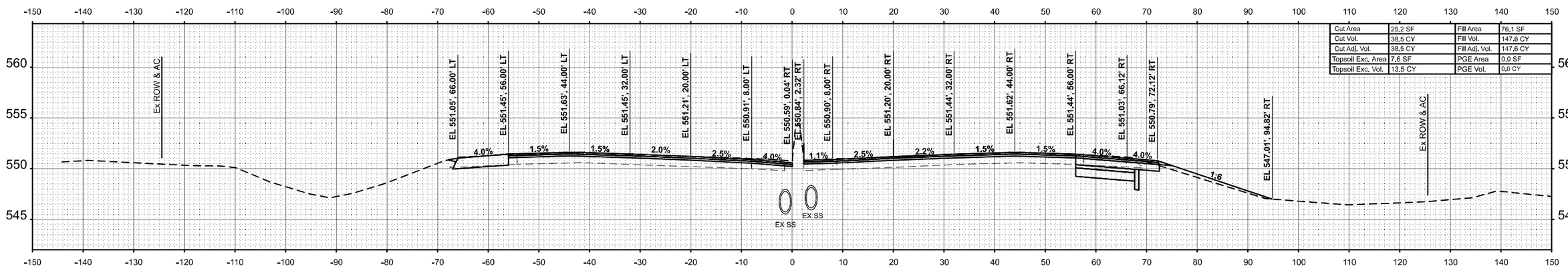

Cut Area	25.2 SF	Fill Area	76.1 SF
Cut Vol.	38.5 CY	Fill Vol.	147.6 CY
Cut Adj. Vol.	38.5 CY	Fill Adj. Vol.	147.6 CY
Topsoil Exc. Area	7.6 SF	PGE Area	0.0 SF
Topsoil Exc. Vol.	13.5 CY	PGE Vol.	0.0 CY

STA 729+00.00

FINAL SURVEY	BY	DATE
SURVEYED		
PLOTTED		
TEMPLATE		
AREAS		
AREAS CHECKED		
NOTE BOOK NO.		

ORIGINAL SURVEY	BY	DATE
SURVEYED		
PLOTTED		
TEMPLATE		
AREAS		
AREAS CHECKED		
NOTE BOOK NO.		

MODEL: I64WEST - 729+00.00
FILE NAME: C:\Users\jmarlin\OneDrive - Farnsworth Group, Inc\Desktop\Working Project Files\I-64\DGN\39783C4-Job-Xsc-West-f.dgn

Farnsworth GROUP

USER NAME = jmarlin	DESIGNED - JJO	REVISED -	
	DRAWN - JRM	REVISED -	
PLOT SCALE = 0.16666633 ' / in.	CHECKED - ERB	REVISED -	
PLOT DATE = 10/16/2024	DATE - 10/15/2024	REVISED -	

STATE OF ILLINOIS
DEPARTMENT OF TRANSPORTATION

F.A.I. ROUTE 64 (I-64)
CROSS SECTIONS

SCALE: 1:10H / 1:5V | SHEET 3 OF 151 SHEETS | STA. 729+00.00 TO STA. 729+50.00

F.A.I. RTE.	SECTION	COUNTY	TOTAL SHEETS	SHEET NO.
64	82-7WRS-2	ST CLAIR	691	498
		CONTRACT NO. 76K74		
		ILLINOIS	FED. AID PROJECT	

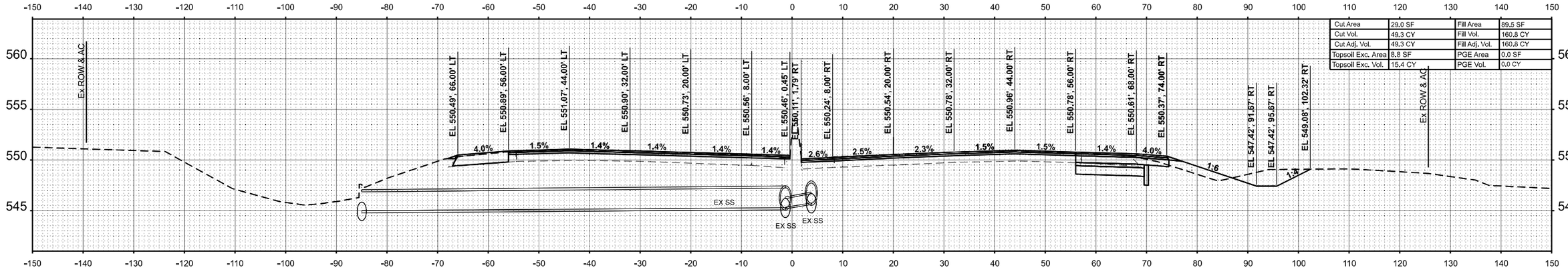

Cut Area	29.0 SF	Fill Area	89.5 SF
Cut Vol.	49.3 CY	Fill Vol.	160.8 CY
Cut Adj. Vol.	49.3 CY	Fill Adj. Vol.	160.8 CY
Topsoil Exc. Area	8.8 SF	PGE Area	0.0 SF
Topsoil Exc. Vol.	15.4 CY	PGE Vol.	0.0 CY

STA 731+00.00

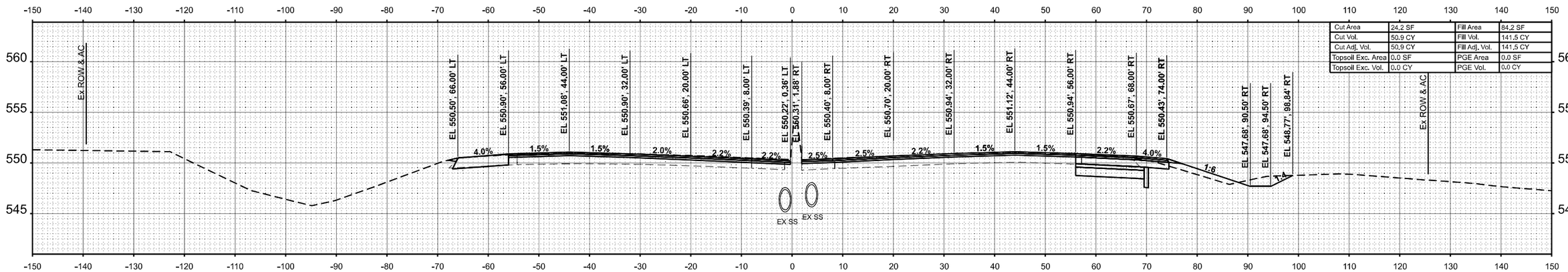

Cut Area	24.2 SF	Fill Area	84.2 SF
Cut Vol.	50.9 CY	Fill Vol.	141.5 CY
Cut Adj. Vol.	50.9 CY	Fill Adj. Vol.	141.5 CY
Topsoil Exc. Area	0.0 SF	PGE Area	0.0 SF
Topsoil Exc. Vol.	0.0 CY	PGE Vol.	0.0 CY

STA 730+50.00

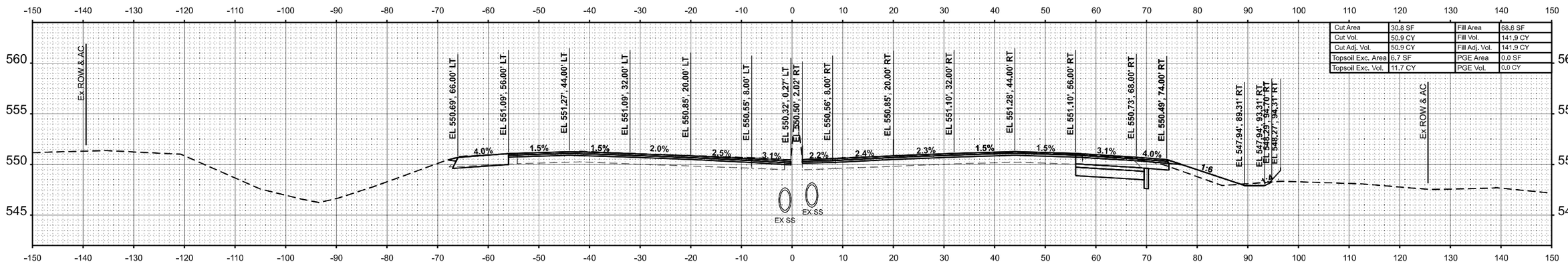

Cut Area	30.8 SF	Fill Area	68.6 SF
Cut Vol.	50.9 CY	Fill Vol.	141.9 CY
Cut Adj. Vol.	50.9 CY	Fill Adj. Vol.	141.9 CY
Topsoil Exc. Area	6.7 SF	PGE Area	0.0 SF
Topsoil Exc. Vol.	11.7 CY	PGE Vol.	0.0 CY

STA 730+00.00

FINAL SURVEY	BY	DATE
SURVEYED		
PLOTTED		
TEMPLATE		
AREAS		
AREAS CHECKED		

NOTE BOOK
NO.

ORIGINAL SURVEY	BY	DATE
SURVEYED		
PLOTTED		
TEMPLATE		
AREAS		
AREAS CHECKED		

NOTE BOOK
NO.

MODEL: I64WEST - 730+00.00
FILE NAME: C:\Users\jmartin\OneDrive - Farnsworth Group, Inc\Desktop\Working Project Files\64\DGN\D576K74-sht-Xsc-Wide4.dgn

Farnsworth GROUP

USER NAME = jmartin	DESIGNED - JJO	REVISED -	
	DRAWN - JRM	REVISED -	
PLOT SCALE = 0.16666633 ' / in.	CHECKED - ERB	REVISED -	
PLOT DATE = 10/16/2024	DATE - 10/15/2024	REVISED -	

STATE OF ILLINOIS
DEPARTMENT OF TRANSPORTATION

F.A.I. ROUTE 64 (I–64)
CROSS SECTIONS

SCALE: 1:10H / 1:5V | SHEET 4 OF 151 SHEETS | STA. 730+00.00 TO STA. 731+00.00

F.A.I. RTE.	SECTION	COUNTY	TOTAL SHEETS	SHEET NO.
64	82-7WRS-2	ST CLAIR	691	499

CONTRACT NO. 76K74

ILLINOIS | FED. AID PROJECT

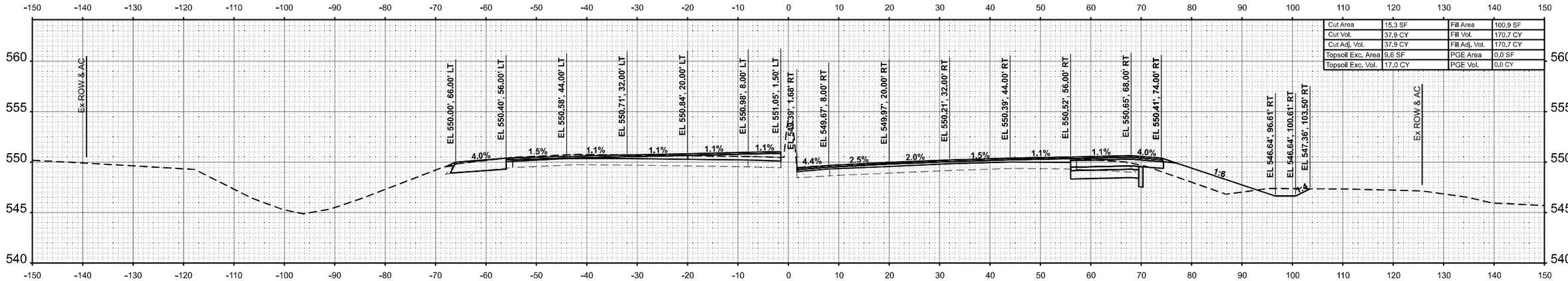

Cut Area	15.3 SF	Fill Area	100.9 SF
Cut Vol.	37.9 CY	Fill Vol.	170.7 CY
Cut Adj. Vol.	37.9 CY	Fill Adj. Vol.	170.7 CY
Topsoil Exc. Area	9.6 SF	PGE Area	0.0 SF
Topsoil Exc. Vol.	17.0 CY	PGE Vol.	0.0 CY

STA 732+50.00

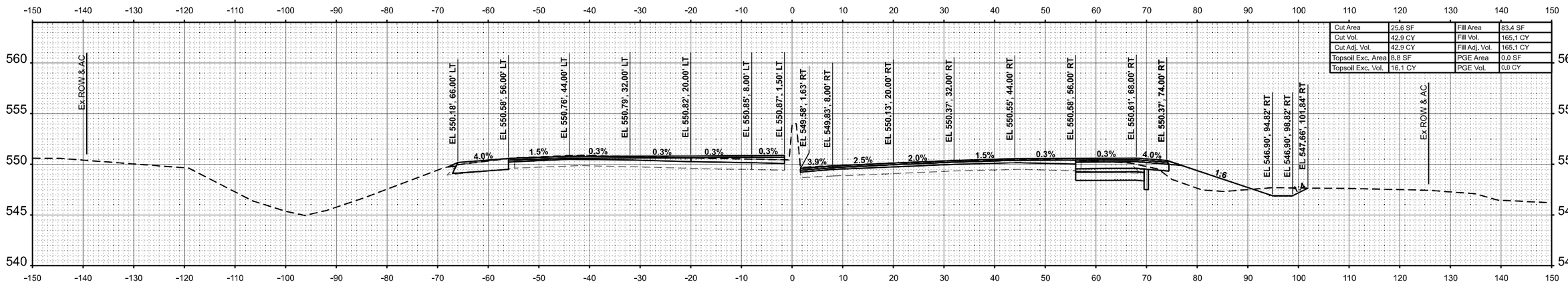

Cut Area	25.6 SF	Fill Area	83.4 SF
Cut Vol.	42.9 CY	Fill Vol.	165.1 CY
Cut Adj. Vol.	42.9 CY	Fill Adj. Vol.	165.1 CY
Topsoil Exc. Area	8.8 SF	PGE Area	0.0 SF
Topsoil Exc. Vol.	16.1 CY	PGE Vol.	0.0 CY

STA 732+00.00

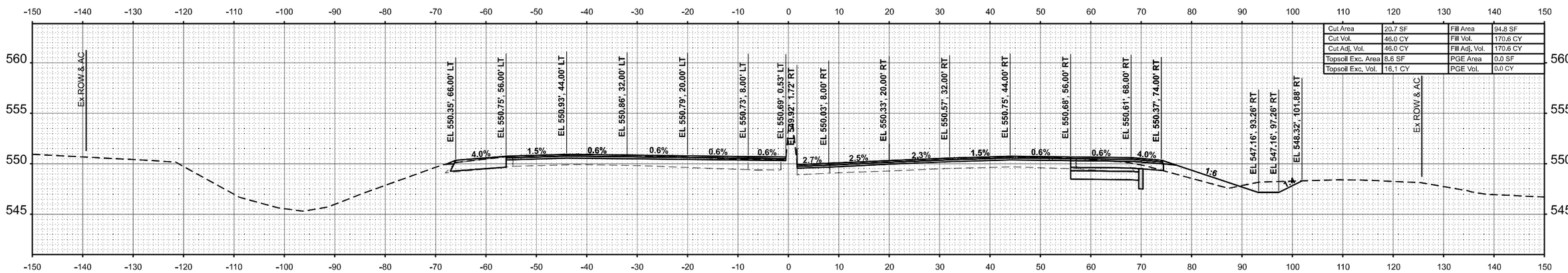

Cut Area	20.7 SF	Fill Area	94.8 SF
Cut Vol.	46.0 CY	Fill Vol.	170.6 CY
Cut Adj. Vol.	46.0 CY	Fill Adj. Vol.	170.6 CY
Topsoil Exc. Area	8.6 SF	PGE Area	0.0 SF
Topsoil Exc. Vol.	16.1 CY	PGE Vol.	0.0 CY

STA 731+50.00

FINAL SURVEY	BY	DATE
SURVEYED		
PLOTTED		
TEMPLATE		
AREAS		
AREAS CHECKED		
NOTE BOOK		
NO.		

ORIGINAL SURVEY	BY	DATE
SURVEYED		
PLOTTED		
TEMPLATE		
AREAS		
AREAS CHECKED		
NOTE BOOK		
NO.		

MODEL: IDAWEST - 731+50.00
FILE NAME: C:\Users\jmartin\OneDrive - Farnsworth Group, Inc\Desktop\Working Project Files\64\DGN\D978K7A-e3xX-Ve: Wide\1.dgn

Farnsworth GROUP

USER NAME = jmartin	DESIGNED - JJO	REVISED -	
	DRAWN - JRM	REVISED -	
PLOT SCALE = 0.16666633 ' / in.	CHECKED - ERB	REVISED -	
PLOT DATE = 10/16/2024	DATE - 10/15/2024	REVISED -	

STATE OF ILLINOIS
DEPARTMENT OF TRANSPORTATION

F.A.I. ROUTE 64 (I–64)
CROSS SECTIONS

SCALE: 1:10H / 1:5V | SHEET 5 OF 151 SHEETS | STA. 731+50.00 TO STA. 732+50.00

F.A.I. RTE.	SECTION	COUNTY	TOTAL SHEETS	SHEET NO.
64	82-7WRS-2	ST CLAIR	691	500

CONTRACT NO. 76K74

ILLINOIS | FED. AID PROJECT