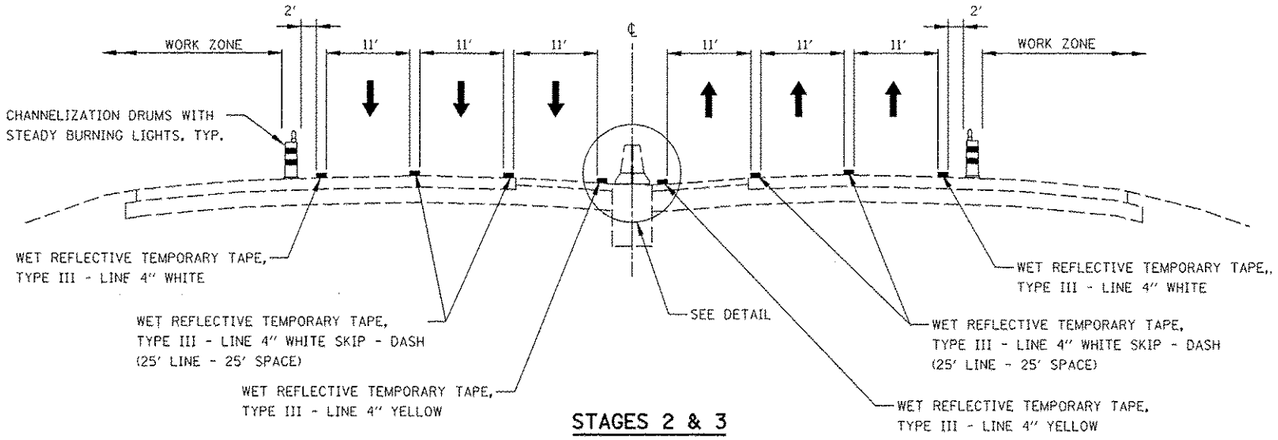

STAGES 2 & 3

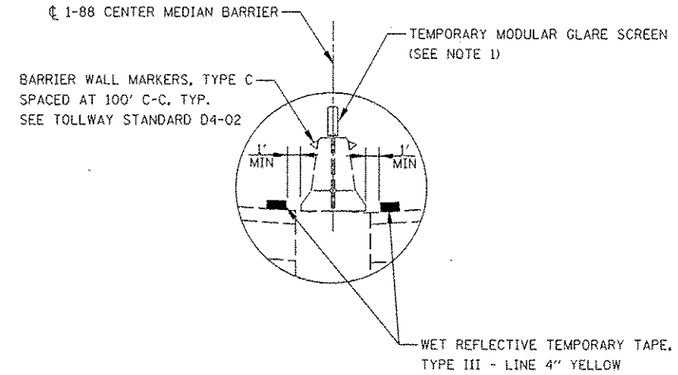

DETAIL

NOTE

1. TEMPORARY MODULAR GLARE SCREEN SYSTEM SHALL BE INSTALLED AT LOCATIONS AS SHOWN ON THE MOT PLANS.

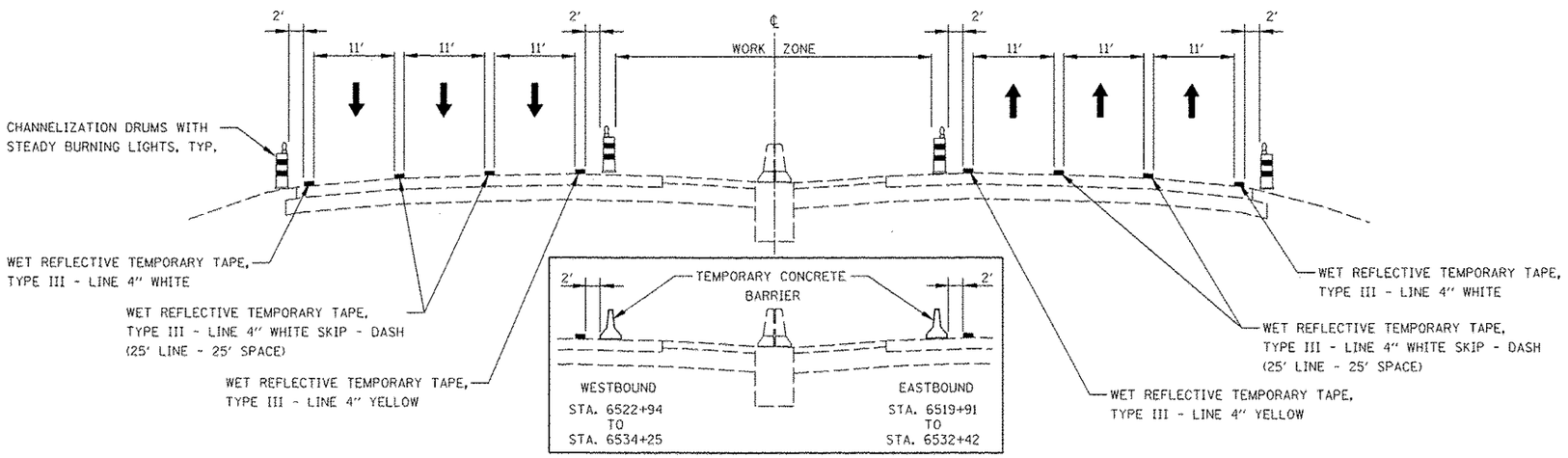

STAGE 3A

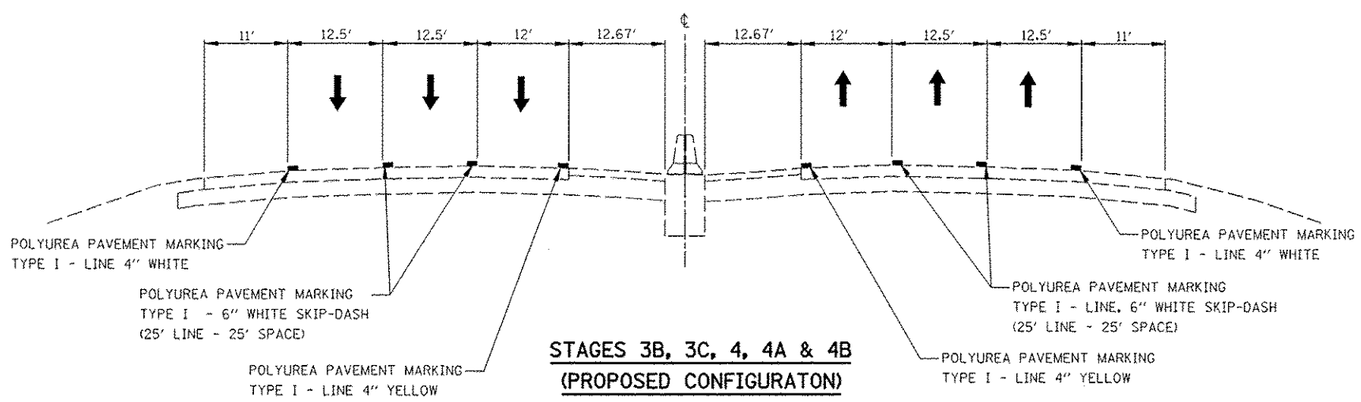

STAGES 3B, 3C, 4, 4A & 4B
(PROPOSED CONFIGURATON)

FILE NAME = $FILEL$	USER NAME = $USER$	DESIGNED PJO	REVISED -	STATE OF ILLINOIS DEPARTMENT OF TRANSPORTATION	MAINTENANCE OF TRAFFIC TYPICAL SECTIONS INTERSTATE 88	F.A.P. RTE.	SECTION	COUNTY	TOTAL SHEETS	SHEET NO.
		DRAWN KES	REVISED -			338	(112 & 113) WRS-5	DUPAGE	963	110
	PLOT SCALE = $SCALE$	CHECKED JCM	REVISED -					CONTRACT NO. 60I31		
	PLOT DATE = $DATE$	DATE 10/15/2012	REVISED		SCALE: SHEET NO. 12 OF 17 SHEETS STA. TO STA.		ILLINOIS FED. AID PROJECT			