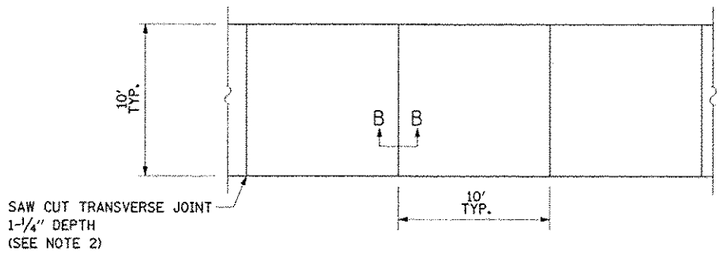

PLAN VIEW

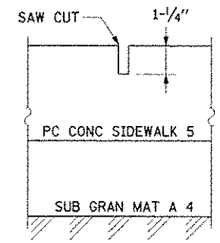

SECTION B-B

SHARED USE PATH JOINTING DETAIL

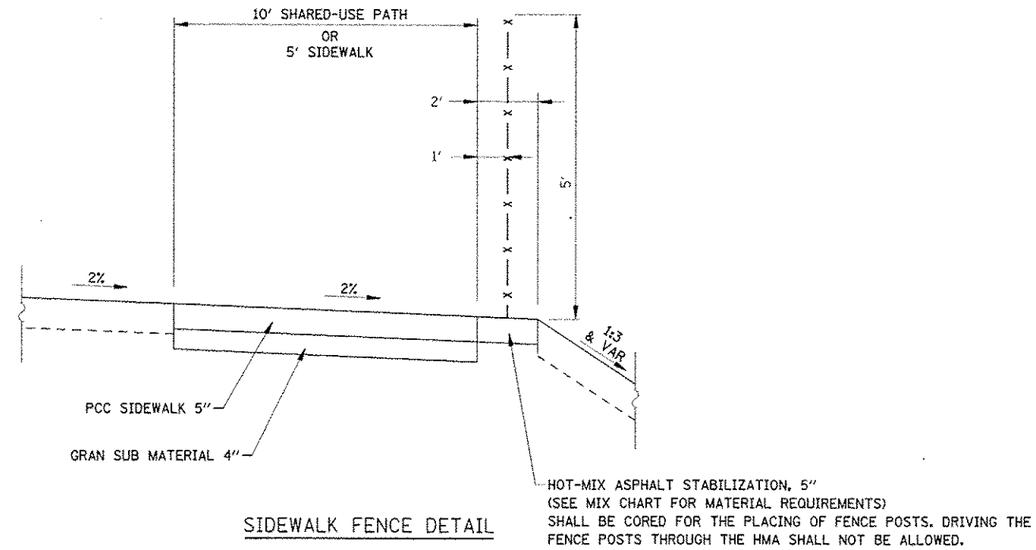

SIDEWALK FENCE DETAIL

NOTES:

1. SEE IDOT HIGHWAY STANDARD 664001 FOR ADDITIONAL DETAILS ON CHAIN LINK FENCE.
2. TOOLED JOINTS SHALL NOT BE ALLOWED ON SHARED USE PATH.
3. SEE LIGHTING PLANS FOR LOCATIONS OF PROPOSED LIGHT POLES.

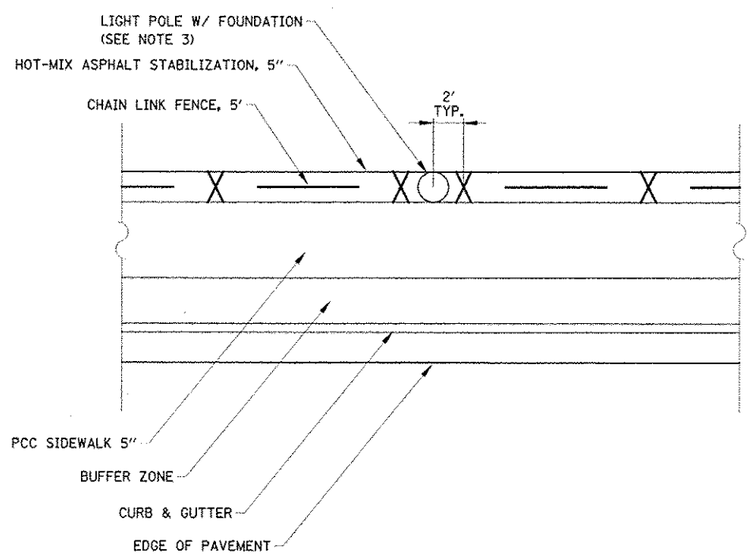

PLAN VIEW

FENCE INTERSECTING WITH LIGHT POLES

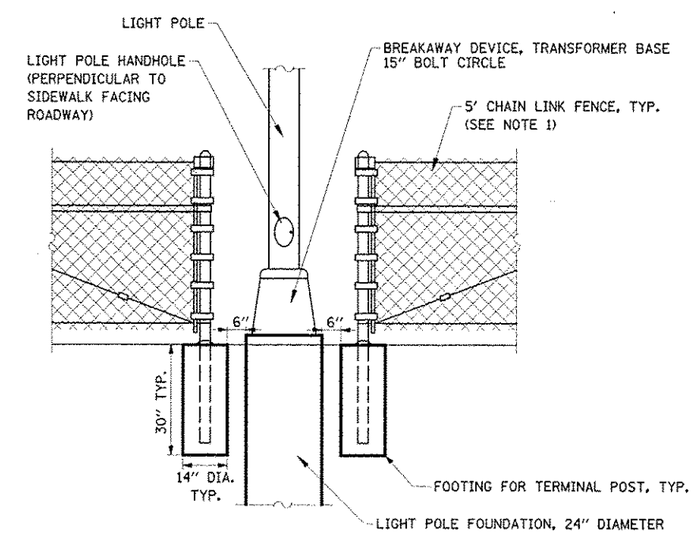

ELEVATION DETAIL

FENCE INTERSECTING WITH LIGHT POLES

FILE NAME =	USER NAME = $USER$	DESIGNED PJO	REVISED -	STATE OF ILLINOIS DEPARTMENT OF TRANSPORTATION	SIDEWALK / SHARED-USE PATH / FENCE DETAILS	F.A.P. RTE.	SECTION	COUNTY	TOTAL SHEETS	SHEET NO.
$FILEL$		DRAWN KES	REVISED -			338	(112 & 113) WRS-5	DUPAGE	963	296
	PLOT SCALE = $SCALE$	CHECKED JCM	REVISED -					CONTRACT NO. 60131		
	PLOT DATE = $DATE$	DATE 10/15/2012	REVISED -		SCALE: SHEET NO. 8 OF 8 SHEETS STA. TO STA.		ILLINOIS FED. AID PROJECT			