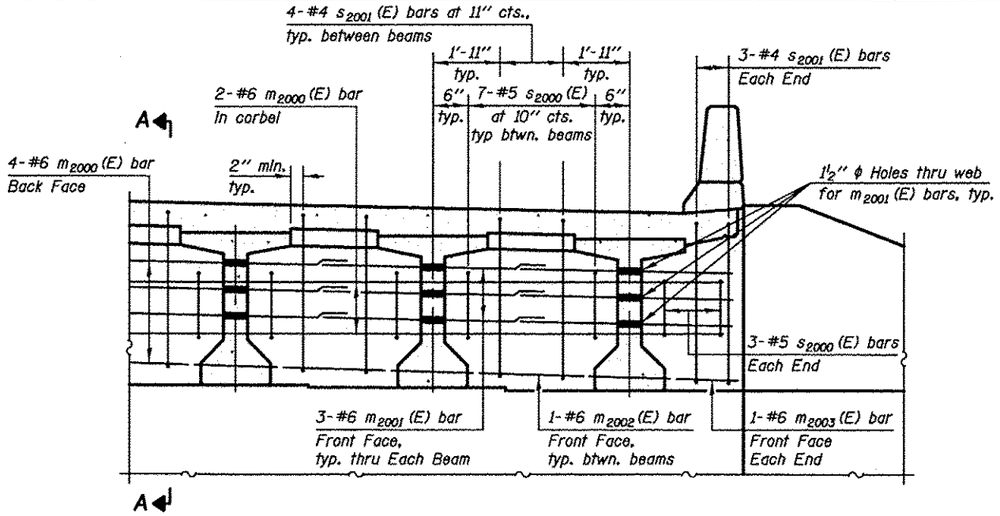

DIAPHRAGM ELEVATION AT ABUTMENT

MIN. BAR LAP

#6 bar = 3'-4"

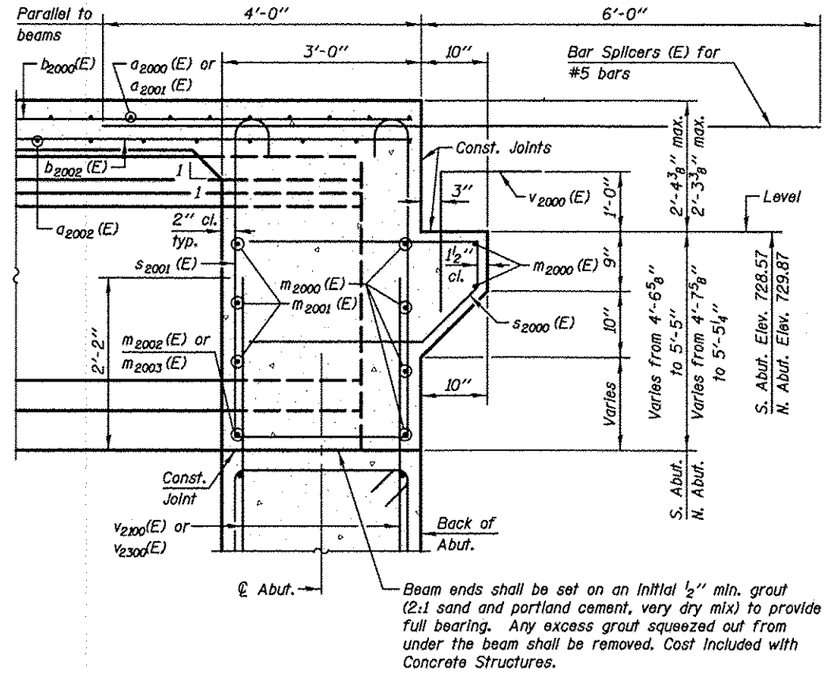

SECTION A-A

Dimensions at right angles to abutment, except as shown.

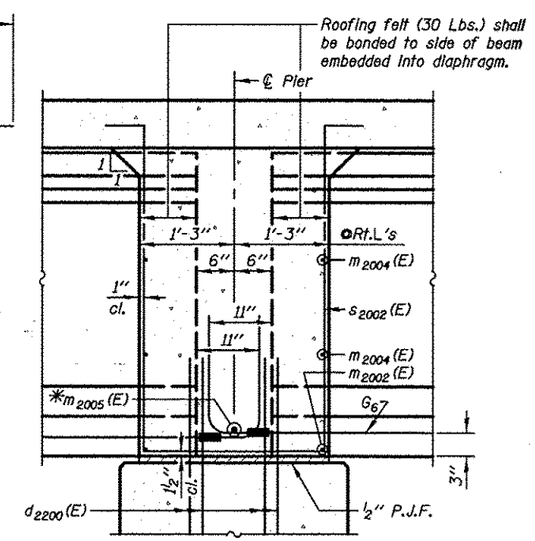

SECTION B-B

Dimensions along ℄ of beam, except as shown.

*Tightly fasten the #8 bars together with No. 9 wire ties.

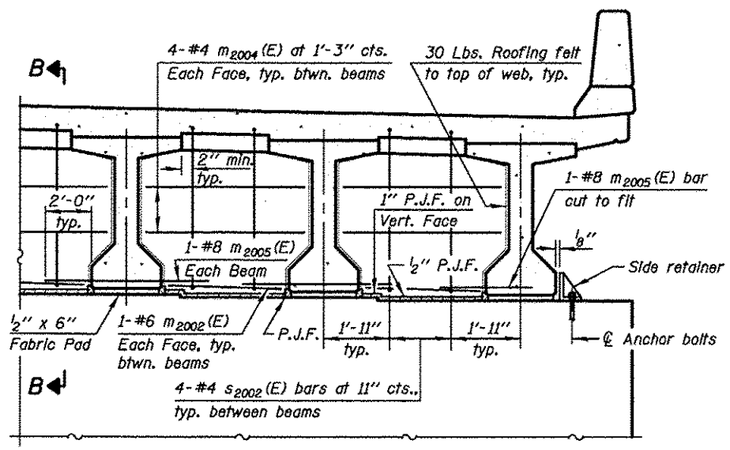

DIAPHRAGM AT PIER

Place 2- 3" I.D. conduit sleeves thru pier diaphragm. Coordinate location with LIGHTING PLANS. Coring of holes thru pier diaphragm will not be allowed. Cost of sleeves is included with Concrete Superstructure.

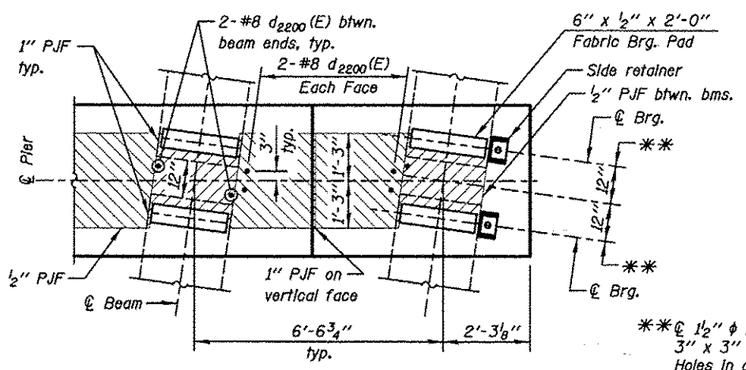

PLAN AT PIER

(Showing bearing pad and PJF details)

**℄ 1½" ϕ x 18" Anchor bolts with 3" x 3" x 5/16" ℞ washer under nut. Holes in cap to be formed or drilled after beams are in place but prior to pouring concrete diaphragm.

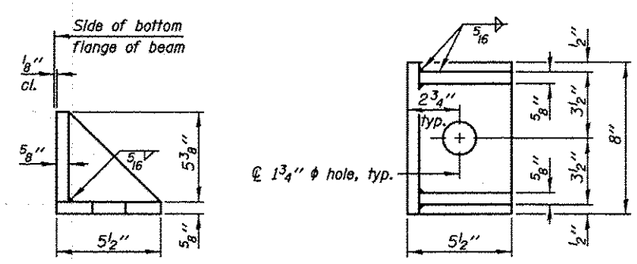

SIDE RETAINER

(2 required each side of pier)
Equivalent rolled angle with stiffeners will be allowed in lieu of welded plates.

Notes:

Reinforcement bars in diaphragm are billed with superstructure on Sheet SA-29.

Concrete in diaphragm is included with Concrete Superstructure on Sheet SA-29.

The s_{2000} (E), s_{2001} (E) and s_{2002} (E) bars shall be placed parallel to the beams. Spacing for these bars shall be at right angles to the beams.

Cost of 30 Lb. roofing felt is included with Concrete Superstructure.

The side retainer shall be galvanized after shop fabrication according to AASHTO M 111. Cost of side retainer and anchor bolts shall be included with Concrete Structures.

Anchor bolt assemblies shall be galvanized according to Article 1006.09 of the Standard Specifications.

Anchor bolts shall be ASTM F1554 all-thread (or an Engineer-approved alternate material) of the grade(s) and diameter(s) specified. ASTM A307 Grade C anchor bolts may be used in lieu of ASTM F1554 Grade 36 (Fy = 36 ksi). The corresponding specified grade of AASHTO M314 anchor bolts may be used in lieu of ASTM F1554.

Anchor bolts for side retainers may be cast in place or installed in holes drilled before or after members are in place.

Drilled and set anchor bolts shall be installed according to Article 521.06 of the Standard Specifications.

KNIGHT Engineers & Architects		DESIGNED - WPM	REVISED	STATE OF ILLINOIS DEPARTMENT OF TRANSPORTATION	DECK DIAPHRAGM DETAILS (NB) S.N. 022-2029 (SB) TOLLWAY B.N. 826 S.N. 022-2030 (NB) TOLLWAY B.N. 825	F.A.P. RTE.	SECTION	COUNTY	TOTAL SHEETS / SHEET NO.
		CHECKED - TB	REVISED			338	(112 & 113) WRS-5	DUPAGE	963 / 612
	SCALE - NONE	DRAWN - TB	REVISED					CONTRACT NO. 60131	
	DATE - 10/15/2012	CHECKED - WPM	REVISED		SHEET NO. SA-28 OF 63 SHEETS		ILLINOIS FED. AID PROJECT		