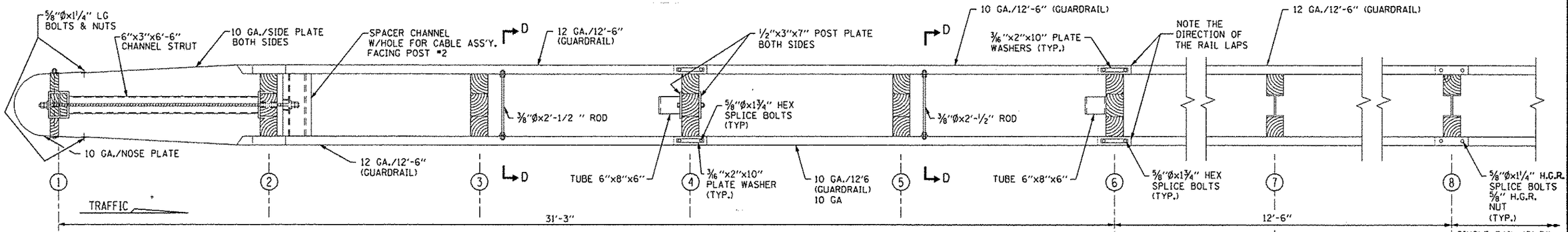

PLAN

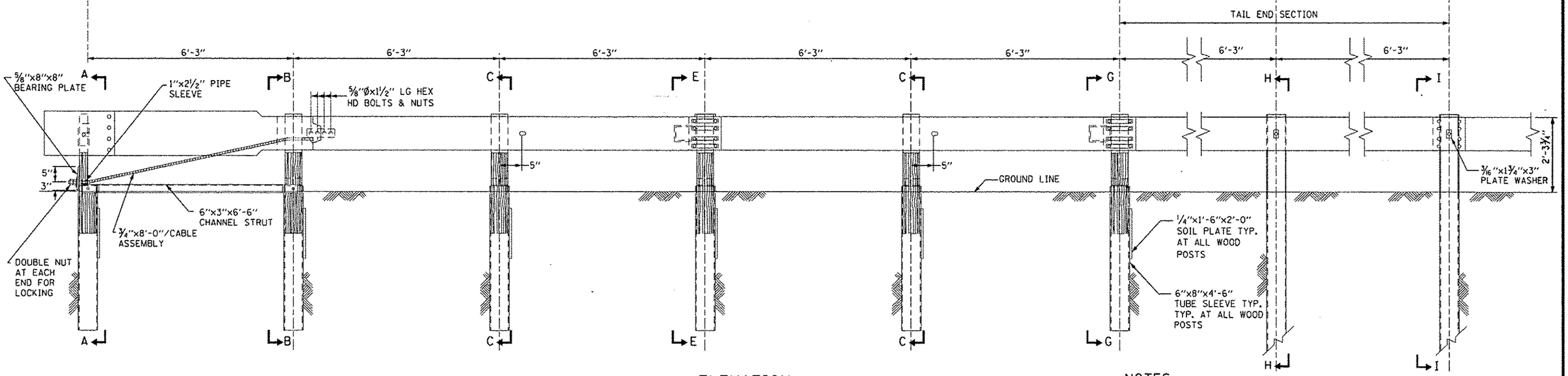

ELEVATION

MEDIAN PIER PROTECTION-TERMINAL SECTION

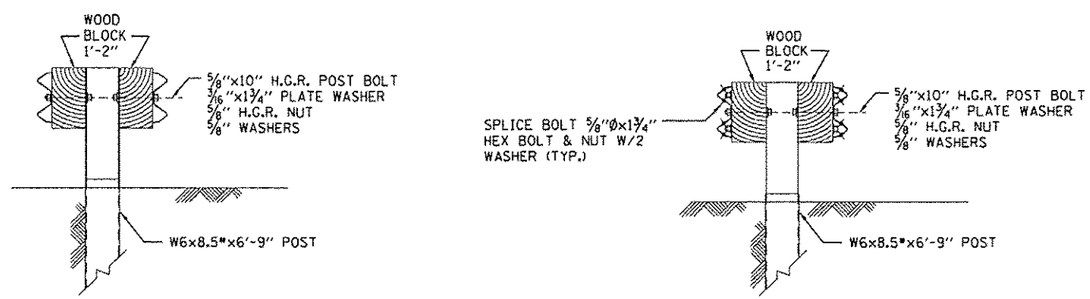

SECTION H-H ⑦ SECTION I-I ⑧

MEDIAN PIER PROTECTION-TERMINAL SECTION

NOTES:

1. RAIL ELEMENTS, BOLTS, NUTS AND WASHERS SHALL BE HOT DIP GALVANIZED IN ACCORDANCE WITH THE STANDARD SPECIFICATIONS AND AASHTO M232 (ASTM A-153).
2. THE BOLTS, NUTS AND WASHERS SHALL CONFORM TO THE REQUIREMENTS OF ASTM A-307, GRADE A. HIGH STRENGTH BOLTS, NUTS AND WASHERS SHALL CONFORM TO AASHTO M164 (ASTM A-325).
3. POSTS, BLOCKS, PLATES AND MISCELLANEOUS ACCESSORIES SHALL CONFORM TO THE REQUIREMENTS OF AASHTO M183 (ASTM A-36) AND SHALL BE GALVANIZED IN ACCORDANCE WITH AASHTO M111 (ASTM A-123).
4. THE WOOD TERMINAL POSTS SHALL BE TREATED AND CONFORM TO THE REQUIREMENTS OF THE STANDARD SPECIFICATIONS.
5. HOLLOW STRUCTURAL TUBING SHALL CONFORM TO ASTM-500, GRADE B OR A-501.
6. THE 3/16" STEEL PLATES SHALL BE GALVANIZED IN ACCORDANCE WITH THE REQUIREMENTS OF AASHTO M232 (ASTM A-153).

CONTRACT 60I31 SHEET 902 OF 963
SHEET 2 OF 3

Illinois Tollway
Open Roads for a Faster Future

MEDIAN PIER PROTECTION

STANDARD C2-02

APPROVED Paul Kovacs CHIEF ENGINEER DATE 7-1-2009