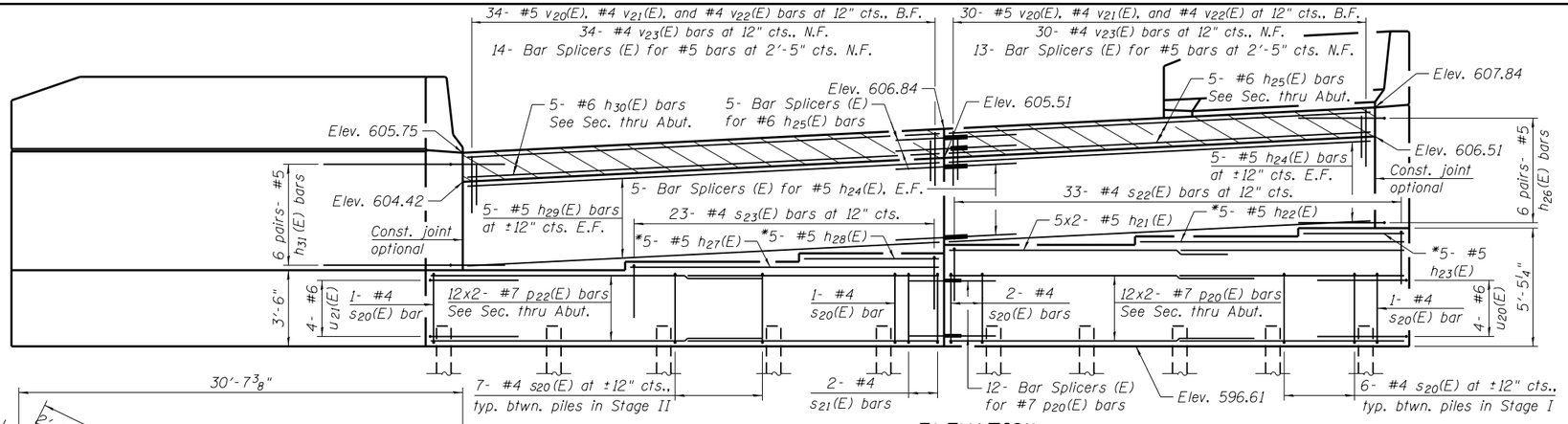

ELEVATION

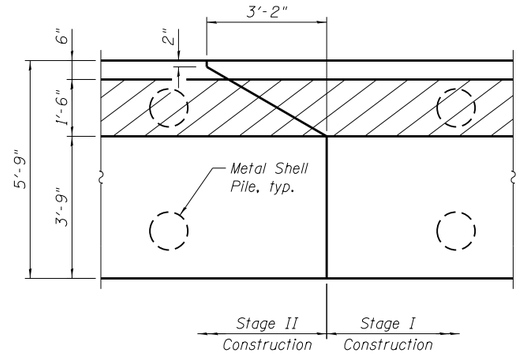

DETAIL 1

(Reinf. omitted for clarity)

* Cut bars to fit skew

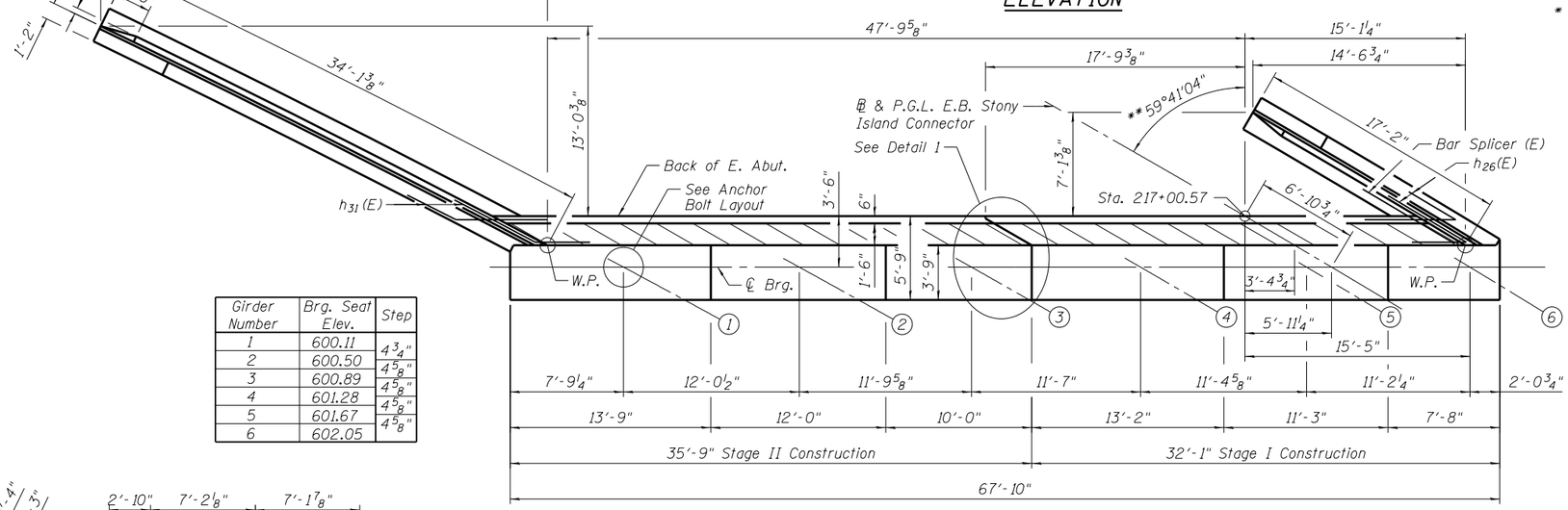

TOP VIEW

Girder Number	Brg. Seat Elev.	Step
1	600.11	4¾"
2	600.50	4⅝"
3	600.89	4⅝"
4	601.28	4⅝"
5	601.67	4⅝"
6	602.05	

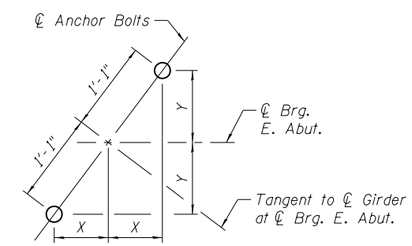

ANCHOR BOLT LAYOUT

Girder Number	X	Y
1	7"	11"
2	7⅛"	10⅞"
3	7⅛"	10⅞"
4	7¼"	10¾"
5	7⅜"	10¾"
6	7½"	10⅝"

LEGEND

- Vertical Pile
- Existing H-Pile
- Existing Timber Pile

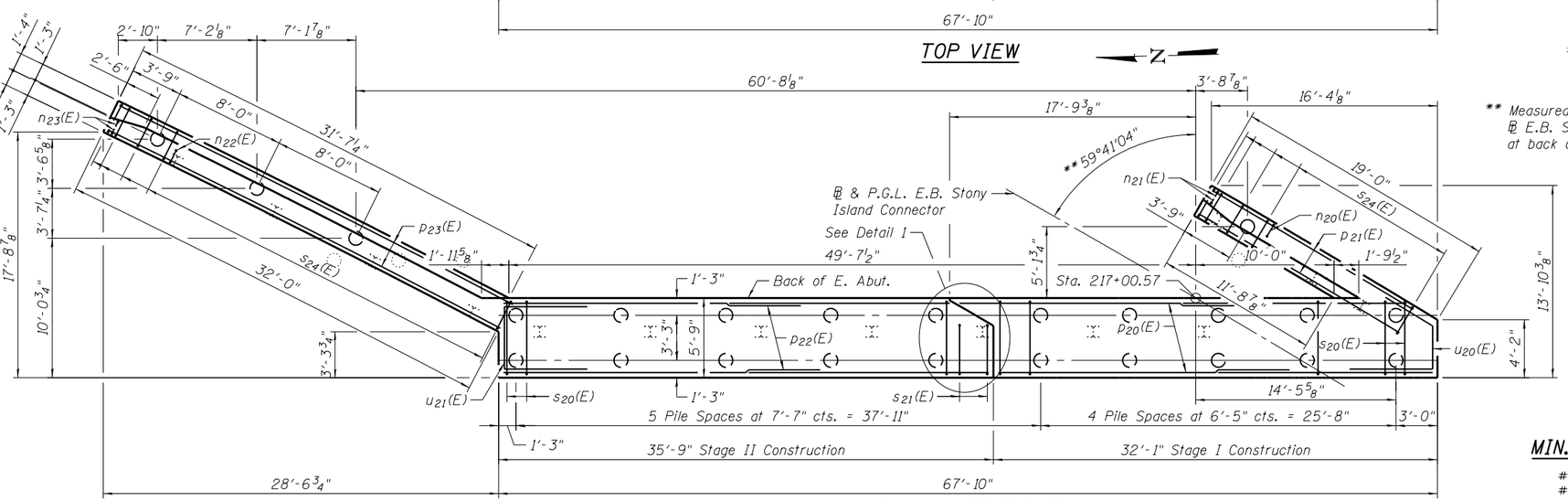

PLAN - PILE CAP

** Measured to tangent to ℄ E.B. Stony Island Connector at back of abutment.

MIN. BAR LAP

#5 - 3'-3"
#7 - 5'-2"

Notes:

N.F. - denotes Near Face
B.F. - denotes Back Face
E.F. - denotes Each Face
U.O.N. - denotes Unless Otherwise Noted

Bars indicated thus 12x2-#7 etc. indicates 12 lines of bars with 2 lengths per line.

For Bill of Material and Bar Bending Details, see Sheet S-36.

For details of Bar Splicers, see sheet S-40.

For details of metal shell piles, see sheet S-39.

Pile locations may be adjusted up to 6" (parallel to ℄ Brg.) from the locations shown herein in order to miss existing piles. All adjusted pile locations must be approved by the Engineer prior to driving.

PILE DATA

Type: Metal Shell - 12" ϕ with 0.250" walls
Nominal Required Bearing: 206 Kips
Factored Resistance Available: 113 Kips
Est. Length: 36 ft.
No. Production Piles: 23
No. Test Piles: 1

S:\1072\05_CADD\Structural\SN 0162471\CADD Sheets\0162471-60J12-034-EA01.dgn 4/30/2013 3:33:35 PM

BOWMAN, BARRETT & ASSOCIATES INC.
CONSULTING ENGINEERS
Chicago, Illinois
312.228.0100
www.bbandainc.com

USER NAME =	DESIGNED - TL	REVISED -	
	CHECKED - BAK	REVISED -	
PLOT SCALE =	DRAWN - TL	REVISED -	
PLOT DATE = 03/29/2013	CHECKED - BAK	REVISED -	

STATE OF ILLINOIS
DEPARTMENT OF TRANSPORTATION

EAST ABUTMENT PLAN AND ELEVATION
STRUCTURE NO. 016-2471

SHEET NO. S-34 OF S-63 SHEETS

F.A.I. RTE.	SECTION	COUNTY	TOTAL SHEETS	SHEET NO.
94	2012-059-BR	COOK	631	527
		CONTRACT NO. 60J12		
	ILLINOIS FED. AID PROJECT			