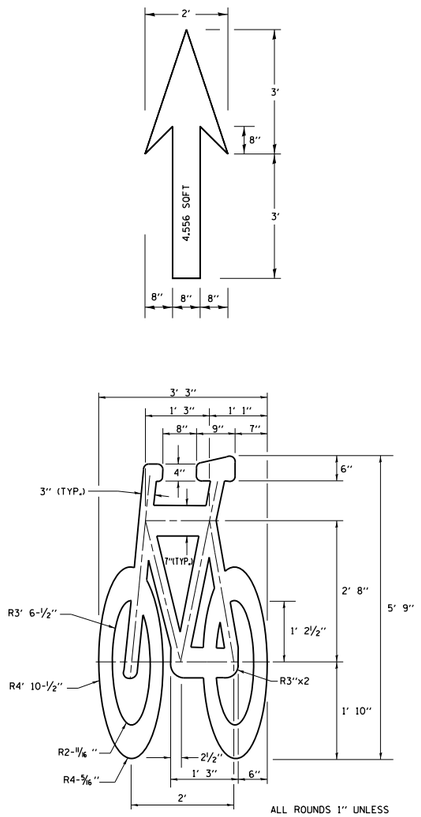

BICYCLE LANE SYMBOL

ALL ROUNDS 1" UNLESS OTHERWISE NOTED.

NOTE:

1.) FOR BIKE LANE SYMBOLS ONLY, USE PRE-FORMED THERMOPLASTIC WITH A MINIMUM THICKNESS OF 90 MILS, MINIMUM SKID RESISTANCE VALUE OF 60 BPN, & A MINIMUM INDEX OF REFRACTION OF 1.50.

2.) THE RESIDENT ENGINEER SHALL CONTACT MR. BEN GOMBERG AT 312-744-8093 AT LEAST ONE CALENDAR WEEK PRIOR TO INSTALLING BIKE LANE SYMBOLS.

TYPICAL BIKE LANE SYMBOLS

DRAWING #28

DRAWING #29

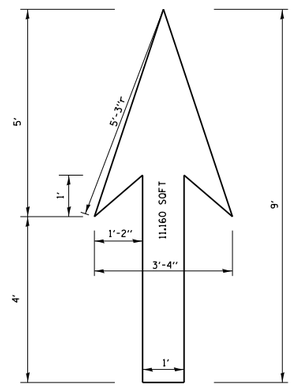

DRAWING #30

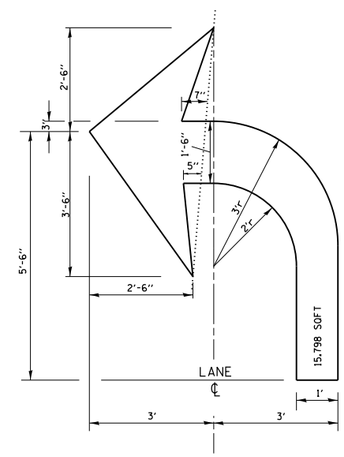

DRAWING #31

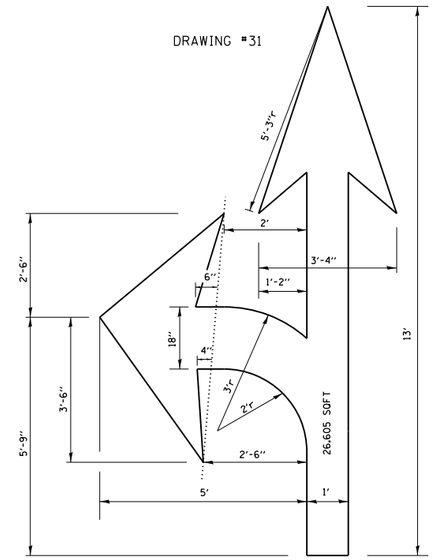

DRAWING #32

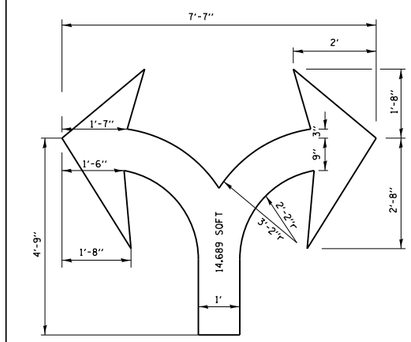

DRAWING #33

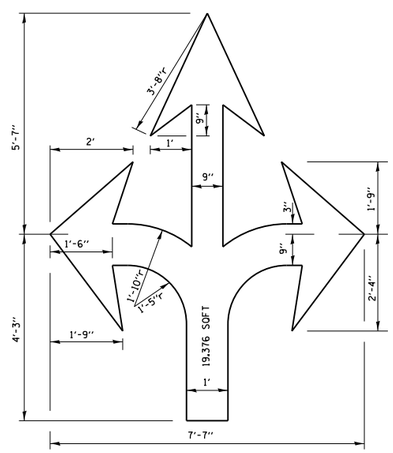

DRAWING #34

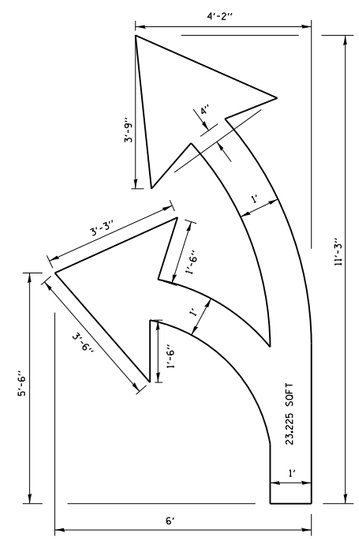

DRAWING #35

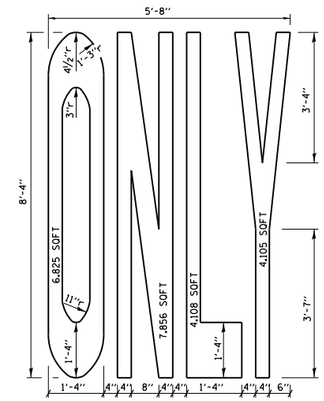

NOTE:

ALL MARKINGS SHALL BE SOLID WHITE UNLESS OTHERWISE NOTED IN THE PLANS

FILE NAME = c:\pw_work\pwidot\smithcj\d0278405\DistStd.dgn	USER NAME = SMITHCJ	DESIGNED -	REVISED - T. RAMMACHER 12-07-00	STATE OF ILLINOIS DEPARTMENT OF TRANSPORTATION	CITY OF CHICAGO TYPICAL PAVEMENT MARKINGS		F.A.U. RTE.	SECTION	COUNTY	TOTAL SHEETS	SHEET NO.
		DRAWN -	REVISED - K. ENG 01-12-12				2885	2011-081-RS	COOK	18	15
	PLOT SCALE = 100.0000 ' / in.	CHECKED -	REVISED -				TC-24		CONTRACT NO. 60R08		
	PLOT DATE = 4/5/2013	DATE -	REVISED -		SCALE: NONE	SHEET NO. 2 OF 3 SHEETS STA. TO STA.	FED. ROAD DIST. NO. 1	ILLINOIS	FED. AID PROJECT		