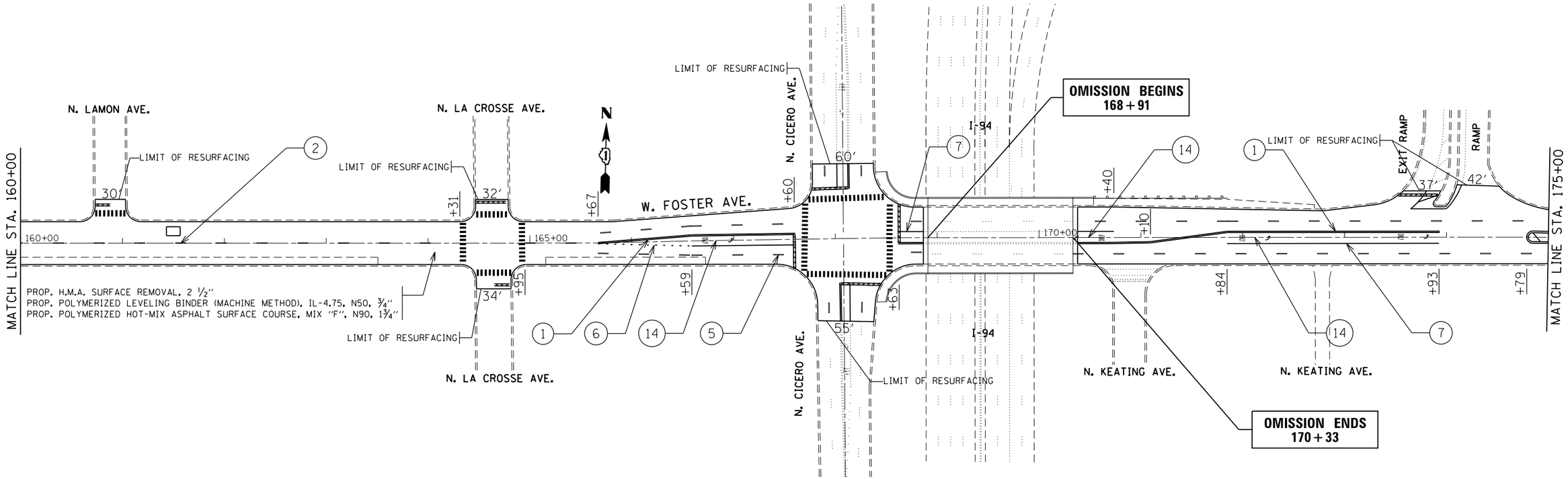

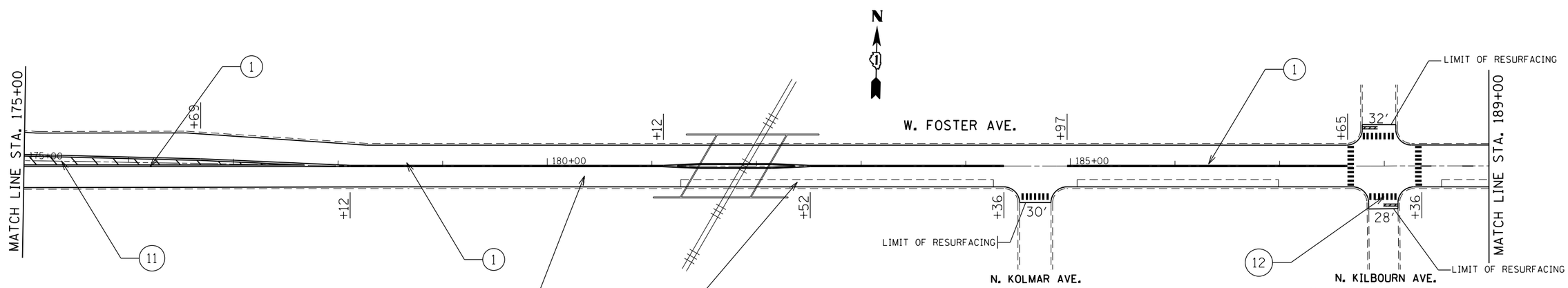

1. THPL PAVT MK, 4" DOUBLE YELLOW LINE (8" C-C) (TYP.)
2. THPL PAVT MK, 4" YELLOW CENTER LINE (6'-18' SKIP DASH) (TYP.)
3. THPL PAVT MK, 4" YELLOW LINE
4. THPL PAVT MK, 4" WHITE EDGE LINE
5. THPL PAVT MK, 4" WHITE LANE LINE (6'-18' SKIP DASH)
6. THPL PAVT MK, 4" WHITE LANE LINE (2'-6' SKIP DASH) (TYP.)
7. THPL PAVT MK, 6" WHITE LANE LINE (TYP.)
8. THPL PAVT MK, 6" DOUBLE WHITE LINE CROSSWALK (6' C-C)
9. THPL PAVT MK, 8" WHITE LINE
10. THPL PAVT MK, 12" DIAGONAL WHITE LINE @ 45° (TYP.)
11. THPL PAVT MK, 12" DIAGONAL YELLOW LINE @ 45° (TYP.)
12. THPL PAVT MK, 24" WHITE CROSSWALK LINE (2' APART) (TYP
13. THPL PAVT MK, 24" WHITE STOP BAR (TYP.)
14. THPL PAVT MK, LETTERS & SYMBOLS

FILE NAME = c:\pw_work\pwidot\guillaumefp\d0301460\D36812-sht-plan.dgn	USER NAME = guillaumefp	DESIGNED -	REVISED -
		DRAWN -	REVISED -
	PLOT SCALE = 100.0000 ' / in.	CHECKED -	REVISED -
Default	PLOT DATE = 4/9/2013	DATE -	REVISED -

STATE OF ILLINOIS
DEPARTMENT OF TRANSPORTATION

FOSTER AVE
HARLEM AVE TO ASHLAND AVE

SCALE: | SHEET 7 OF 14 SHEETS | STA. TO STA.

F.A.U. RTE.	SECTION	COUNTY	TOTAL SHEETS	SHEET NO.
1360	2012-009RS	COOK	33	15

CONTRACT NO. 60T51

ILLINOIS FED. AID PROJECT