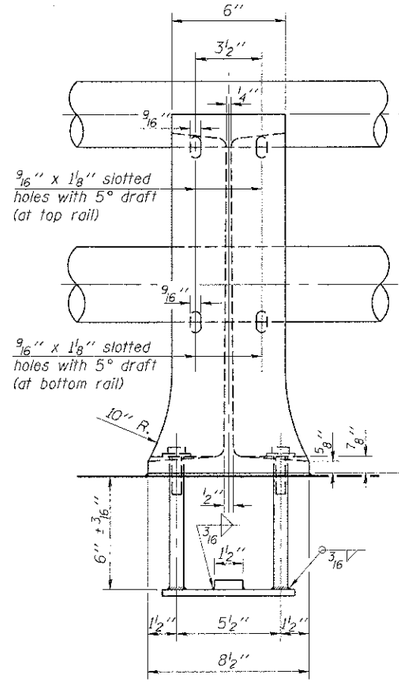

VIEW B-B

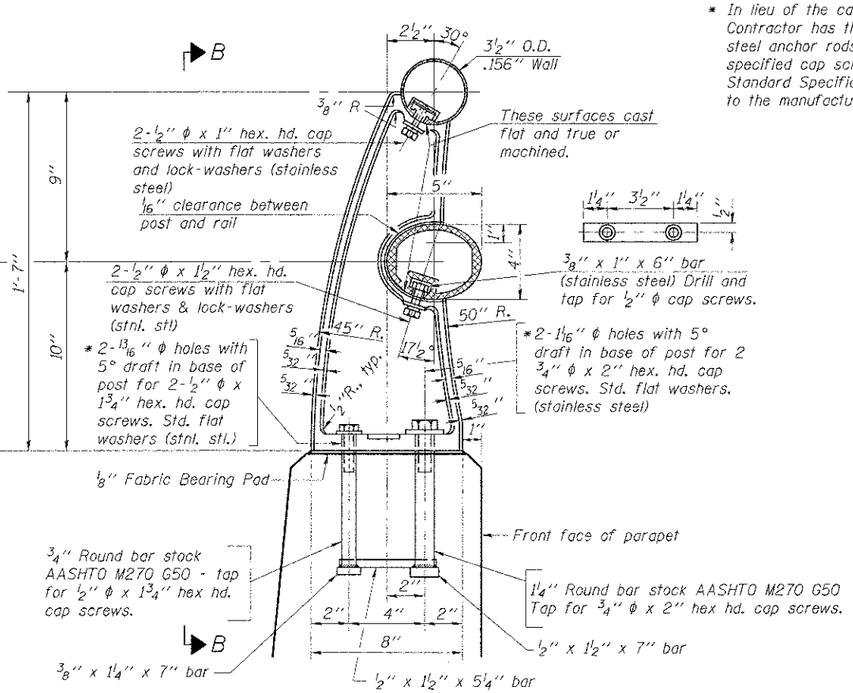

SECTION A-A

RAIL POST DETAILS

* In lieu of the cast-in-place anchor device shown, the Contractor has the option of drilling and setting stainless steel anchor rods of the same diameter and grade as the specified cap screws according to Article 509.06 of the Standard Specifications. Embedment shall be according to the manufacturer's specifications.

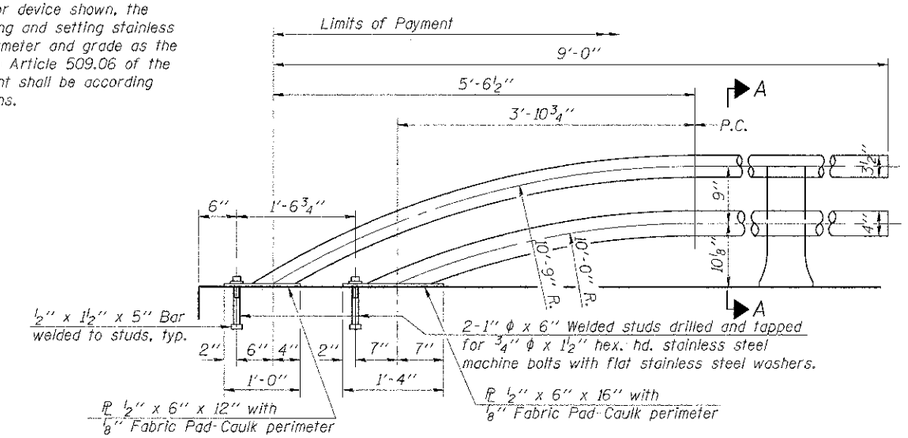

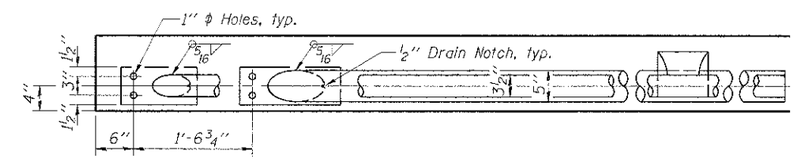

RAIL TERMINAL SECTION

Note:
The end rail post shall be set back as required for the terminal rail section.

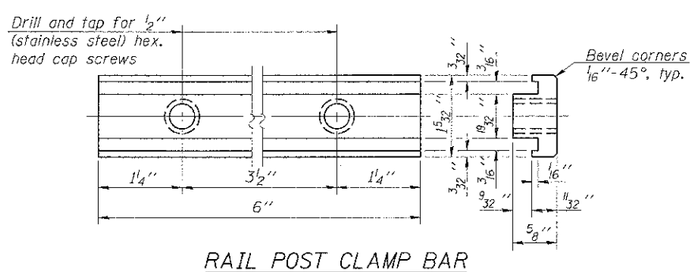

RAIL POST CLAMP BAR
For Top Rail

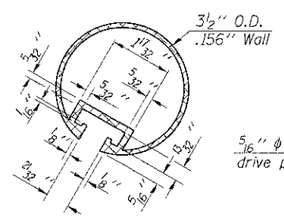

SECTION THRU TOP RAIL

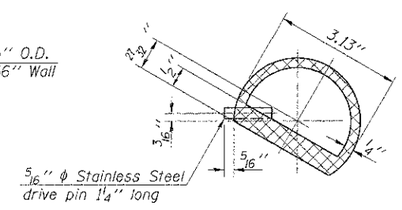

SECTION THRU SPLICE
For Top Rail

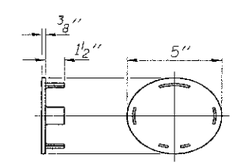

CAST END CAP
For bottom rail
DRIVE FIT TYPE

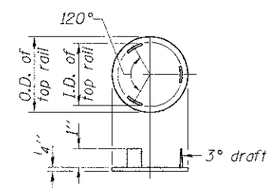

CAST END CAP
For top rail

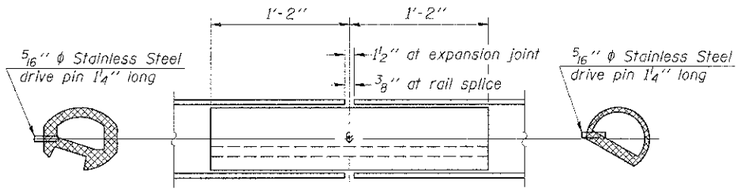

BOTTOM RAIL

TOP RAIL

RAIL SPLICE

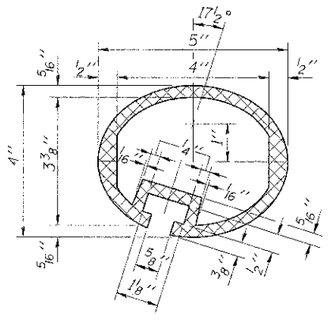

SEC. THRU ELLIPTICAL RAIL SECTION

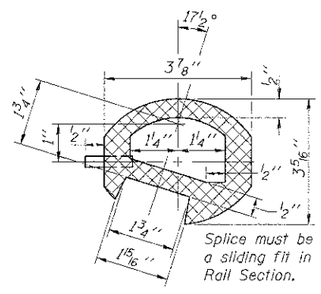

SEC. THRU SPLICE

Notes:
All Posts shall be normal to parapet.
All joints in rail shall be spliced per detail.
All exposed rail ends shall be capped per detail.
Provide 1-⅛" and 2-1/16" Aluminum Shims for 25% of the Posts. Rail elements shall be parallel to Grade-high spots will be ground and low spots shimmed.
See sheet of for rail post spacing.

BILL OF MATERIAL

Item	Unit	Quantity
Aluminum Railing, Type L	Foot	61

FILE NAME = N:\ROLLINGMEADOWS\98361BR126\98361BR126-S8.SHT	DESIGNED -	REVISED -	STATE OF ILLINOIS DEPARTMENT OF TRANSPORTATION
	CHECKED -	REVISED -	
PLOT SCALE =	DRAWN -	REVISED -	
PLOT DATE =	CHECKED -	REVISED -	

CARRIAGEWAY DRIVE
RAILING DETAILS
SHEET NO. S8 OF S12 SHEETS

F.A. RTE.	SECTION	COUNTY	TOTAL SHEETS	SHEET NO.
	10-00101-00-BR	COOK	34	25

CONTRACT NO. 63787
ILLINOIS FED. AID PROJECT