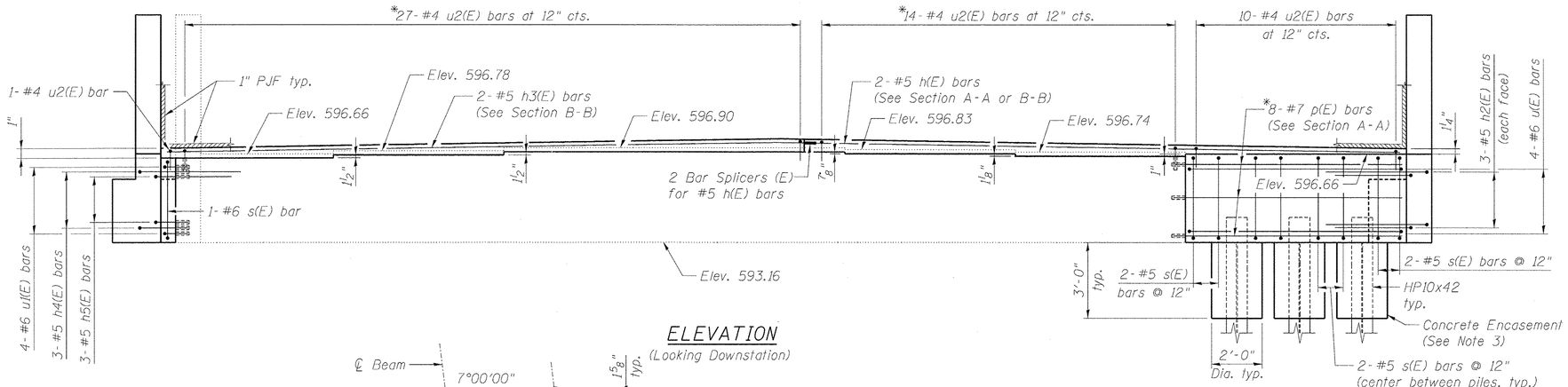

ELEVATION
(Looking Downstation)

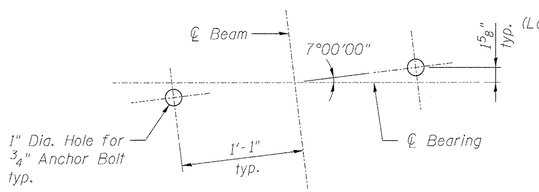

ANCHOR BOLT DETAIL

*Drill and grout bars according to Article 584 of the Standard Specifications. Maximum depth of drilled hole shall not exceed 6". Cost to be included in Reinforcement Bars, Epoxy Coated.

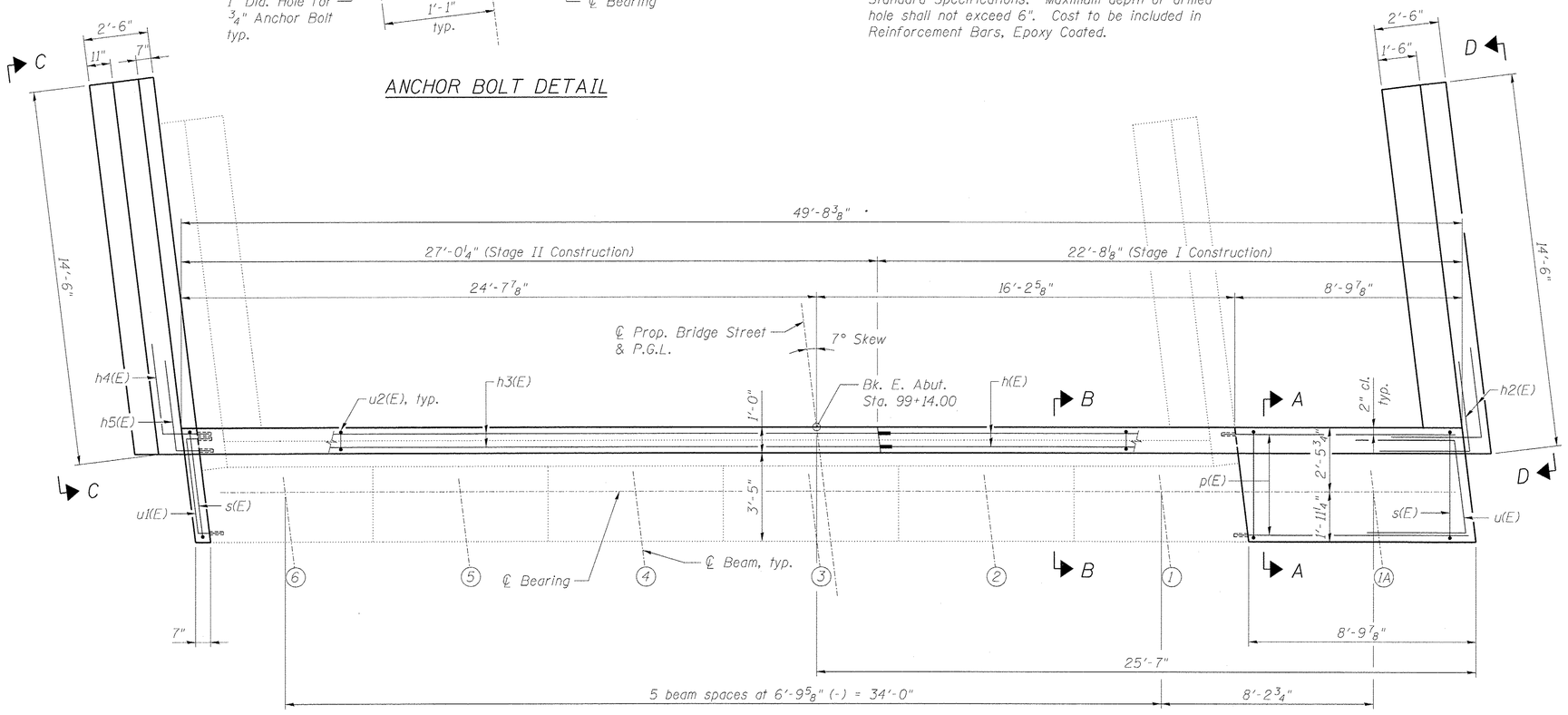

PLAN

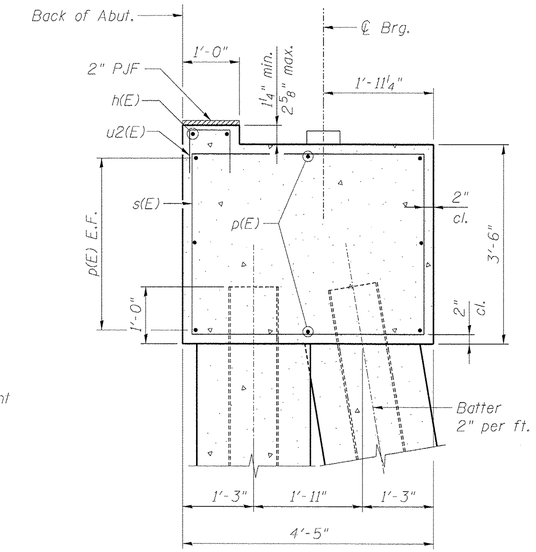

SECTION A-A

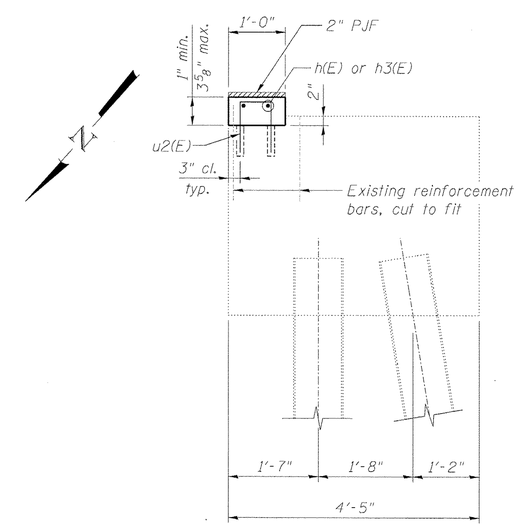

SECTION B-B

NOTES:

1. For Views C-C and D-D, Section Thru Pile Cap, Bill of Material and reinforcement details see sheet S28.
2. For bar splicer details, see sheet S36.
3. For Concrete Encasement details, see sheet S35.

benesch engineers · scientists · planners
Alfred Benesch & Company
205 North Michigan Avenue, Suite 2400
Chicago, Illinois 60601
312-565-0450 Job No. 10055.02

FILE NAME = 0166953_027_AbutDetl.dgn	USER NAME = eship	DESIGNED - MJF/MFB	REVISED -
		CHECKED - EFS	REVISED -
	PLOT SCALE =	DRAWN - RMG	REVISED -
	PLOT DATE = 2/19/2013	CHECKED - EFS	REVISED -

STATE OF ILLINOIS
DEPARTMENT OF TRANSPORTATION

EAST ABUTMENT WIDENING DETAILS 1 OF 2
STRUCTURE NO. 016-6953 BRIDGE ST. OVER THE NORTH SHORE CHANNEL
SHEET NO. S27 OF S50 SHEETS

F.A.I. RTE.	SECTION	COUNTY	TOTAL SHEETS	SHEET NO.
	08-00251-00-BR	COOK	118	80
		CONTRACT NO. 63817		
	ILLINOIS FED. AID PROJECT			

X:\10000S\10055.02\Eng_Docs_Phase_II\Bridge_Street_016-6953\Final\0166953_027_AbutDetl.dgn 2:51:05 PM 2/19/2013