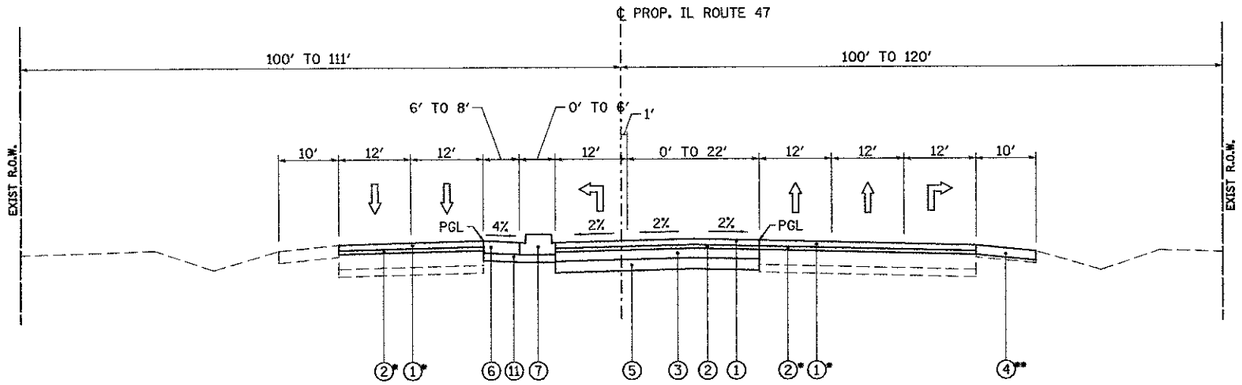

P-1 PROPOSED TYPICAL SECTION
STA. 104+30.00 TO 110+22.43, ILLINOIS ROUTE 47
*STA. 108+98.97 TO 110+22.43, ILLINOIS ROUTE 47
**STA. 108+98.97 TO 109+81.77, ILLINOIS ROUTE 47

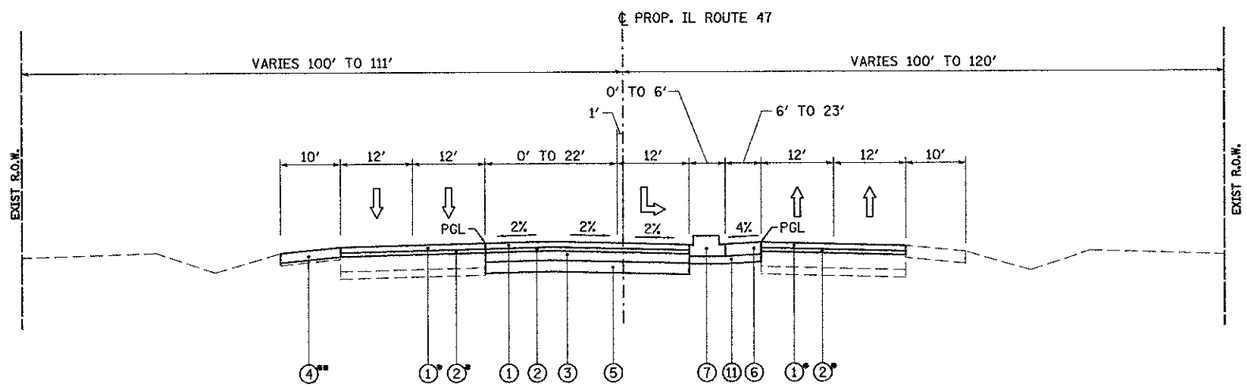

P-2 PROPOSED TYPICAL SECTION
STA. 110+22.43 TO 116+70.00, ILLINOIS ROUTE 47
*STA. 110+22.43 TO 111+30.43, ILLINOIS ROUTE 47
**STA. 110+79.48 TO 111+30.43, ILLINOIS ROUTE 47

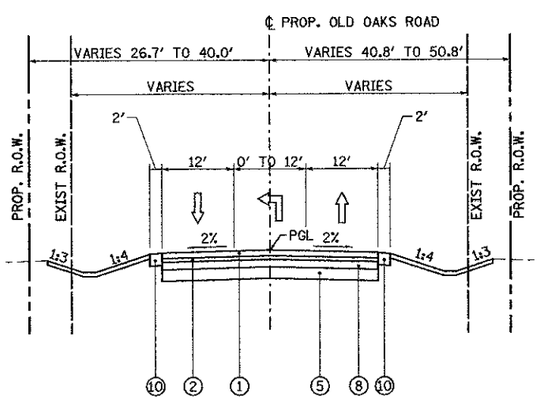

P-3 PROPOSED TYPICAL SECTION
STA. 11+17.65 TO 15+07.84, OLD OAKS ROAD

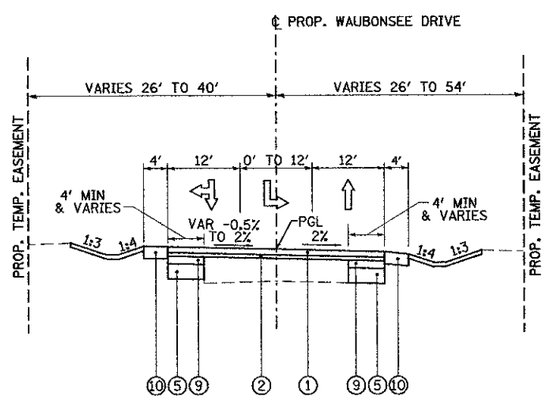

P-4 PROPOSED TYPICAL SECTION
STA. 15+53.82 TO 20+16.27, WAUBONSEE DRIVE

HOT-MIX ASPHALT MIXTURE REQUIREMENTS

MIXTURE TYPE	AIR VOIDS @ NDES	THICKNESS
PAVEMENT WIDENING AND RESURFACING (ILLINOIS ROUTE 47)		
POLYMERIZED HOT-MIX ASPHALT SURFACE COURSE, MIX "F", N90 (IL-9.5mm)	4% @ 90 GYR.	1 3/4"
POLYMERIZED LEVELING BINDER (MACHINE METHOD), IL-4.75, N50	3.5% @ 50 GYR.	3/4"
HOT-MIX ASPHALT BASE COURSE (HMA BINDER IL-19mm)	4% @ 90 GYR.	8 1/2" (3 LIFTS)
PAVEMENT RECONSTRUCTION (OLD OAKS ROAD)		
POLYMERIZED HOT-MIX ASPHALT SURFACE COURSE, MIX "F", N90 (IL-9.5mm)	4% @ 90 GYR.	1 3/4"
POLYMERIZED LEVELING BINDER (MACHINE METHOD), IL-4.75, N50	3.5% @ 50 GYR.	3/4"
HOT-MIX ASPHALT BASE COURSE (HMA BINDER IL-19mm)	4% @ 90 GYR.	4 3/4" (2 LIFTS)
PAVEMENT WIDENING AND RESURFACING (WAUBONSEE DRIVE)		
POLYMERIZED HOT-MIX ASPHALT SURFACE COURSE, MIX "F", N90 (IL-9.5mm)	4% @ 90 GYR.	1 3/4"
POLYMERIZED LEVELING BINDER (MACHINE METHOD), IL-4.75, N50	3.5% @ 50 GYR.	3/4"
HOT-MIX ASPHALT BASE COURSE WIDENING (HMA BINDER IL-19mm)	4% @ 90 GYR.	4 3/4" (2 LIFTS)
PAVEMENT PATCHING		
CLASS D PATCH (HMA BINDER IL-19mm)	4% @ 70 GYR.	8" (3 LIFTS)
HOT-MIX ASPHALT REPLACEMENT OVER PATCHES	4% @ 70 GYR.	4"
SHOULDER RESURFACING		
POLYMERIZED HOT-MIX ASPHALT SURFACE COURSE, MIX "F", N90 (IL-9.5mm)	4% @ 90 GYR.	1 3/4"
POLYMERIZED LEVELING BINDER (MACHINE METHOD), IL-4.75, N50	3.5% @ 50 GYR.	3/4"

NOTES:
1. THE UNIT WEIGHT USED TO CALCULATE ALL HMA SURFACE MIXTURE QUANTITIES IS 112 LBS/SQ YD/IN.
2. THE "AC TYPE" FOR POLYMERIZED HMA MIXES SHALL BE "SBS/SBR PG 70-22" AND FOR NON-POLYMERIZED HMA THE "AC TYPE" SHALL BE "PG 64-22" UNLESS MODIFIED BY DISTRICT ONE SPECIAL PROVISIONS. FOR USE OF RECYCLED MATERIALS SEE DISTRICT ONE SPECIAL PROVISIONS.

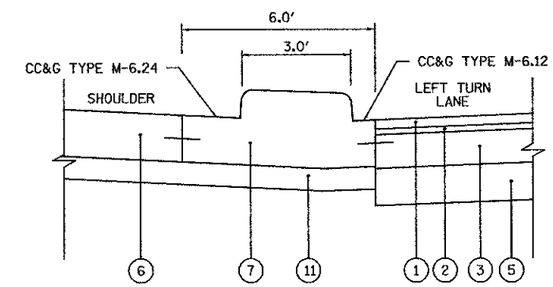

CONCRETE MEDIAN, TYPE SM-6.24 (SPECIAL) DETAIL

NOTES:
1. EXISTING DIMENSIONS AND THICKNESSES ARE SHOWN FROM RECORD PLANS AND FIELD SURVEY, ACTUAL DIMENSIONS AND THICKNESSES MAY VARY.
2. NO ADDITIONAL COMPENSATION WILL BE ALLOWED TO THE CONTRACTOR BECAUSE OF VARIATION FROM THE THICKNESS SHOWN ON THE PLANS. THIS REQUIREMENT SHALL NOT BE A CAUSE FOR CLAIMING DELAY.

PROPOSED LEGEND
1. POLYMERIZED HOT-MIX ASPHALT SURFACE COURSE, MIX "F", N90, 1 3/4"
2. POLYMERIZED LEVELING BINDER (MACHINE METHOD), IL-4.75, N50, 3/4"
3. HOT-MIX ASPHALT BASE COURSE, 8 1/2"
4. HOT-MIX ASPHALT SHOULDERS, 2 1/2"
5. AGGREGATE SUBGRADE IMPROVEMENT 12"
6. HOT-MIX ASPHALT SHOULDERS, 8"
7. CONCRETE MEDIAN, TYPE SM-6.24 (SPECIAL)
8. HOT-MIX ASPHALT BASE COURSE, 4 3/4"
9. HOT-MIX ASPHALT BASE COURSE WIDENING, 4 3/4"
10. AGGREGATE SHOULDERS, TYPE B, 6"
11. AGGREGATE SUBGRADE IMPROVEMENT 8"

PATRICK ENGINEERING INC.
4970 VARSITY DRIVE
LISLE, IL 60532
patrickengineering.com

USER NAME = mpine(Lisle_R)	DESIGNED - MJP	REVISED - 4/5/2013	
PLOT CONFIG= PDF(Grey_Large).pltcfg	DRAWN - JAC	REVISED -	
PLOT SCALE = 1:10	CHECKED - JAH	REVISED -	
PLOT DATE = 4/4/2013 2:30:34 PM	DATE - 3/25/2013	REVISED -	

STATE OF ILLINOIS
DEPARTMENT OF TRANSPORTATION

ILLINOIS ROUTE 47 AT WAUBONSEE DRIVE /OLD OAKS ROAD
PROPOSED TYPICAL SECTION

SCALE: N/A | SHEET TYP 2 OF 2 | STA. | TO STA.

F.A.P. RTE.	SECTION	COUNTY	TOTAL SHEETS	SHEET NO.
326	11-00001-00-CH	KANE	55	9
		CONTRACT NO. 63829		
FED. ROAD DIST. NO.	ILLINOIS	FED. AID PROJECT		

G:\WAUBONSEE\212580.013\Drawings\ROWY\Shts\Typ\S_Typ_01.dgn