STATE OF ILLINOIS
DEPARTMENT OF TRANSPORTATION

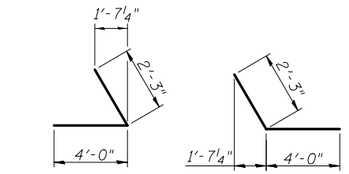

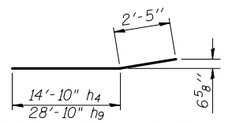

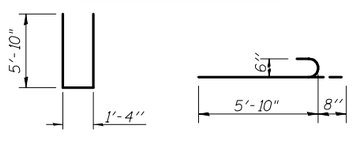

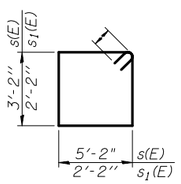

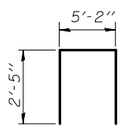

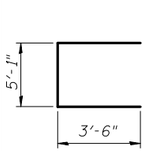

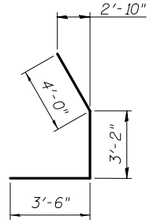

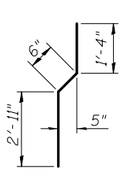

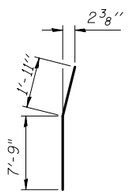

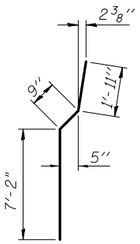

PILE DATA

Type: HP10x42
Nominal Required Bearing: 227 k
Factored Resistance Available: 113 k

	North	South	Wing
Est. Length:	23'	24'	23'
No. Production Piles:	20	16	2
No. Test Piles:	1	0	0

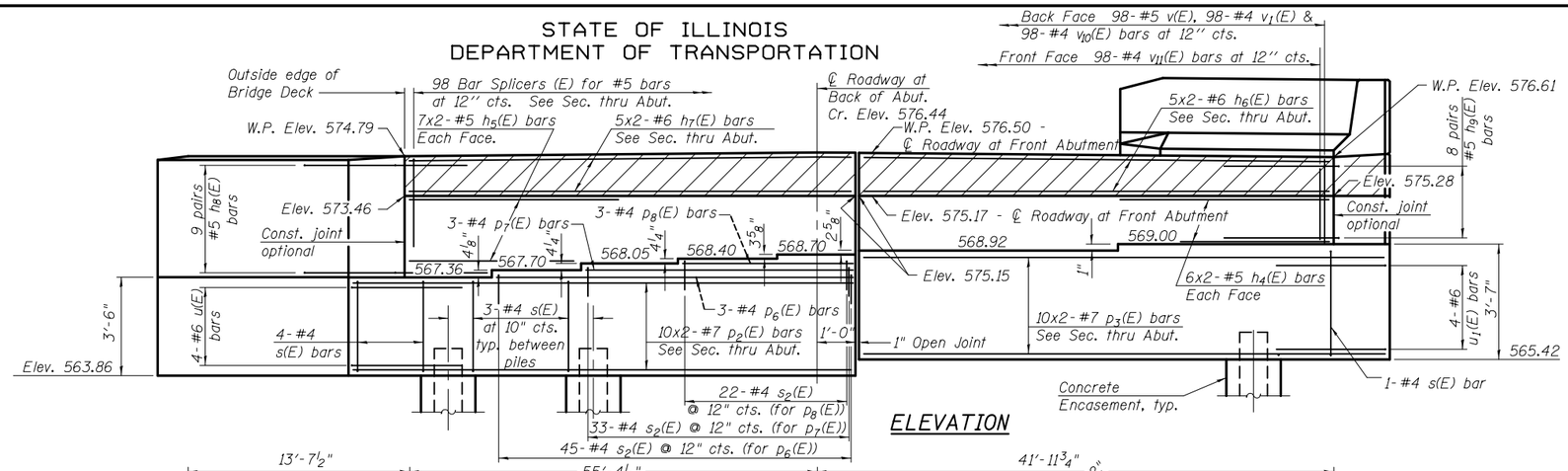

ELEVATION

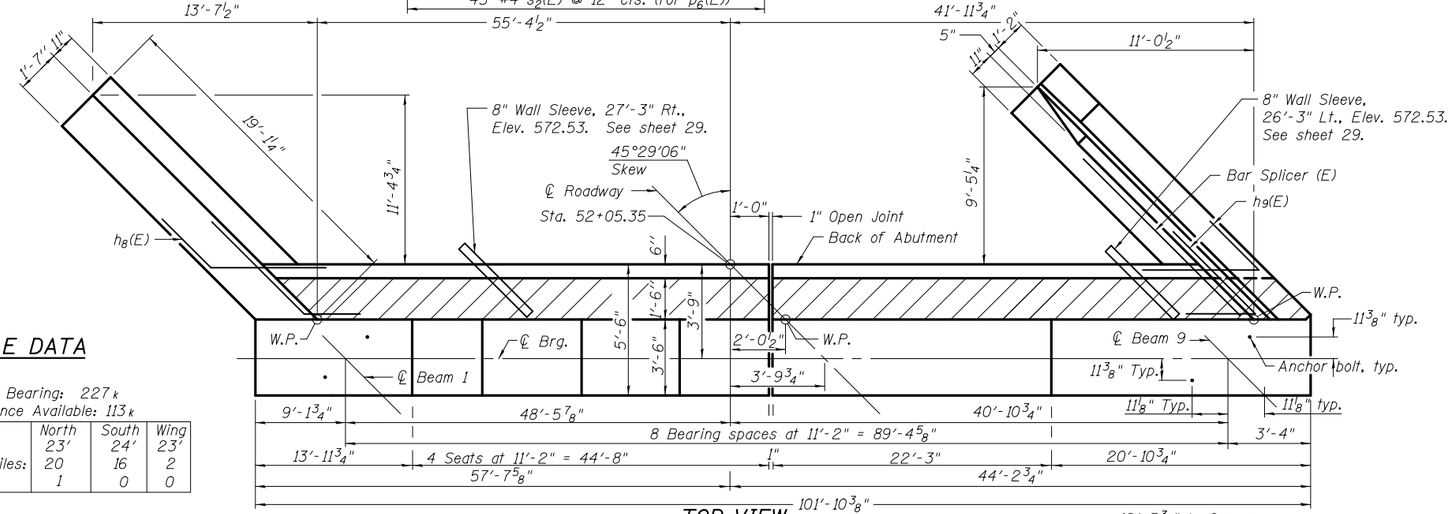

TOP VIEW

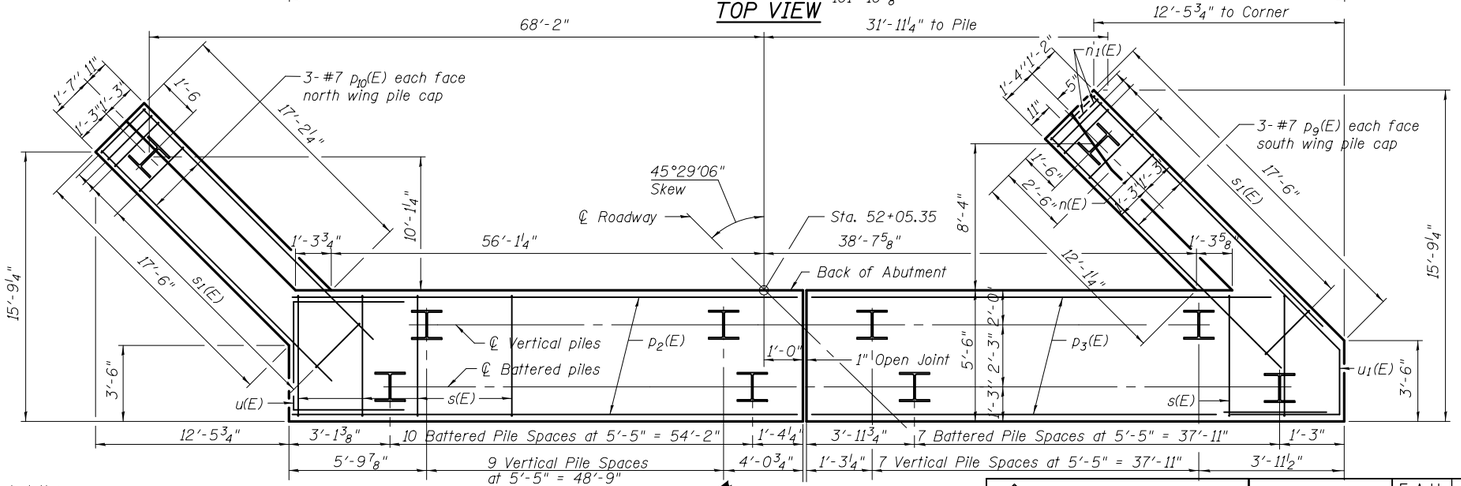

PLAN-PILE CAP

Minimum Lap Lengths		
Bar Size	Length	Top Bar
#4	1'-8"	
#5	2'-2"	
#5 Top Bar	3'-0"	h4, h5
#6	2'-7"	
#7	3'-5"	
#7 Top Bar	4'-10"	p2, p3

ABUTMENT BILL OF MATERIAL

Bar	No.	Size	Length	Shape
h4(E)	24	#5	22'-4"	
h5(E)	28	#5	30'-7"	
h6(E)	10	#6	22'-6"	
h7(E)	10	#6	30'-2"	
h8(E)	18	#5	6'-3"	
h9(E)	16	#5	6'-3"	
h16(E)	10	#4	16'-11"	
h17(E)	8	#4	15'-9"	
h17(E)	2	#4	16'-1"	
h18(E)	8	#4	17'-4"	
h19(E)	8	#4	18'-6"	
n(E)	33	#6	13'-0"	
n1(E)	6	#6	6'-6"	
p2(E)	20	#7	31'-8"	
p3(E)	20	#7	23'-10"	
p6(E)	3	#4	44'-4"	
p7(E)	3	#4	33'-2"	
p8(E)	3	#4	22'-0"	
p9(E)	6	#7	17'-2"	
p10(E)	6	#7	18'-4"	
s(E)	113	#4	17'-5"	
s1(E)	49	#4	9'-5"	
s2(E)	100	#4	10'-0"	
u(E)	4	#6	12'-1"	
u1(E)	4	#6	10'-8"	
v(E)	98	#5	4'-2"	
v1(E)	98	#4	4'-9"	
v6(E)	52	#6	10'-0"	
v7(E)	6	#6	9'-7"	
v8(E)	46	#6	18'-4"	
v9(E)	38	#6	6'-1"	
v10(E)	98	#4	7'-0"	
v11(E)	98	#4	8'-7"	
Structure Excavation			Cu. Yd.	437
Concrete Structures			Cu. Yd.	142.3
Reinforcement Bars, Epoxy Coated			Pound	13,150
Furnishing Steel Piles HP 10 x 42			Foot	890
Driving Piles			Foot	890
Test Pile Steel HP 10 x 42			Each	1
Concrete Encasement			Cu. Yd.	14
Concrete Sealer			Sq. Ft.	1201

For details of Bar Splicers, see sheet 30 of 33.
For details of piles and Concrete Encasement, see sheet 31 of 33.

EAST ABUTMENT
STRUCTURE NO. 032-0119

Note:
Bars indicated thus:
18 x 2-#6 etc. indicates 18 lines of bars with 2 lengths per line

DESIGNED	JSI/MAJ/JFS
CHECKED	JFS/MJB
DRAWN	MLB/JLP
CHECKED	JFS/MJB

Foth
Foth Infrastructure & Environment, LLC
7500 North Harker Drive
Peoria, IL 61615
Phone: 309-691-5300 Fax: 309-691-1892
Illinois Registration Number 184.004913

SHEET NO. 23
33 SHEETS

F.A.U RTE.	SECTION	COUNTY	TOTAL SHEETS	SHEET NO.
400	(32,47-4) HBR-2	GRUNDY	143	84
	S.N. 032-0119	CONTRACT NO. 66873		
FED. ROAD DIST. NO.	ILLINOIS	FED. AID PROJECT		

$FILE$