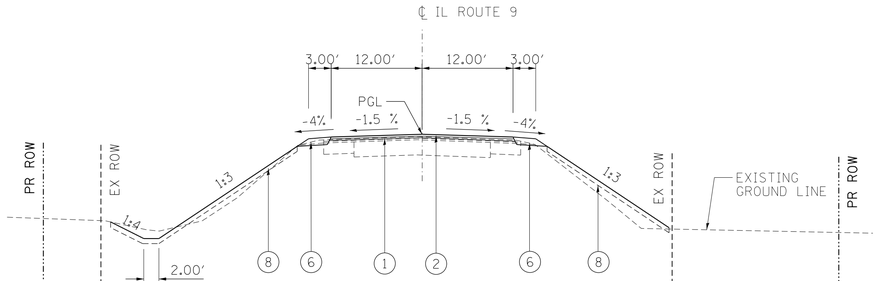

PROPOSED OVERLAY SECTION
STA 643+00 TO STA 643+30
STA 656+70 TO STA 657+00

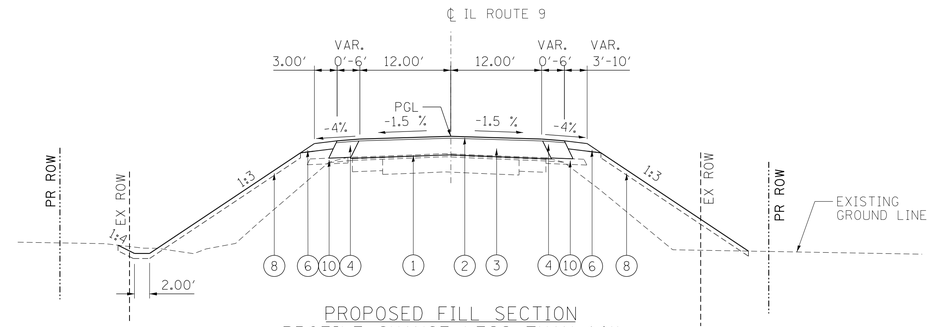

PROPOSED FILL SECTION
PROFILE CHANGE LESS THAN 14″
STA 643+30 TO STA 645+47
STA 653+97 TO 656+70

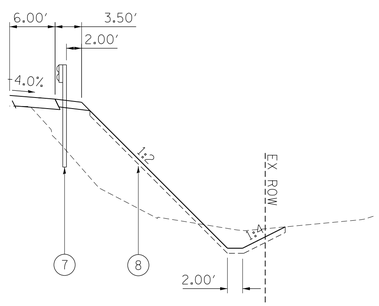

DITCH SECTION
STA. 648+00 TO STA. 649+26

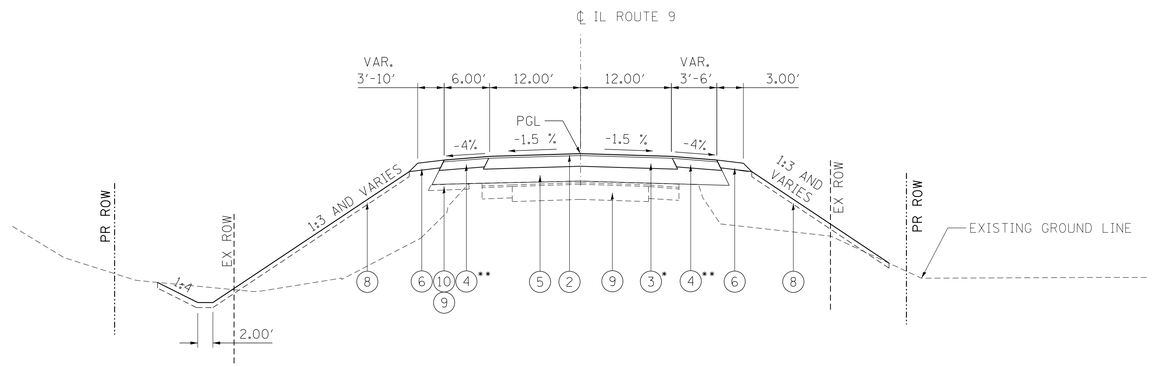

PROPOSED FILL SECTION
PROFILE CHANGE GREATER THAN 14″
STA 653+53 TO STA 653+97

LEGEND

1. HMA SURFACE REMOVAL, VARIABLE DEPTH
2. HMA SURFACE COURSE, 1.5″
3. HMA BINDER COURSE (VARIABLE DEPTH)
4. HMA SHOULDERS
5. SUB-BASE GRANULAR MATERIAL, TYPE B (VARIABLE DEPTH)
6. AGGREGATE SHOULDER, TYPE B (6″)
7. STEEL PLATE BEAM GUARDRAIL, TYPE A
8. TOPSOIL AND SEEDING
9. PAVEMENT BREAKING
10. TEMPORARY PAVEMENT

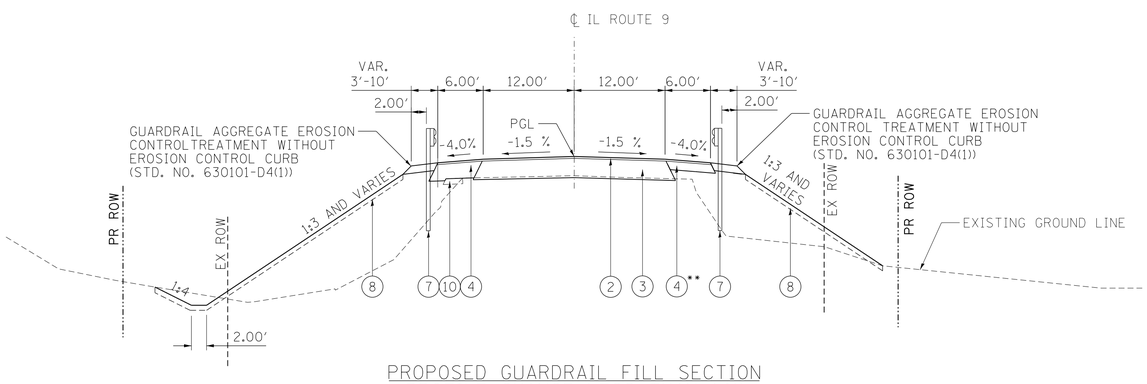

PROPOSED GUARDRAIL FILL SECTION
PROFILE CHANGE LESS THAN 14″
STA 645+47 TO 648+55.75
(BRIDGE OMISSION STA 648+55.75 TO STA 650+44.25)

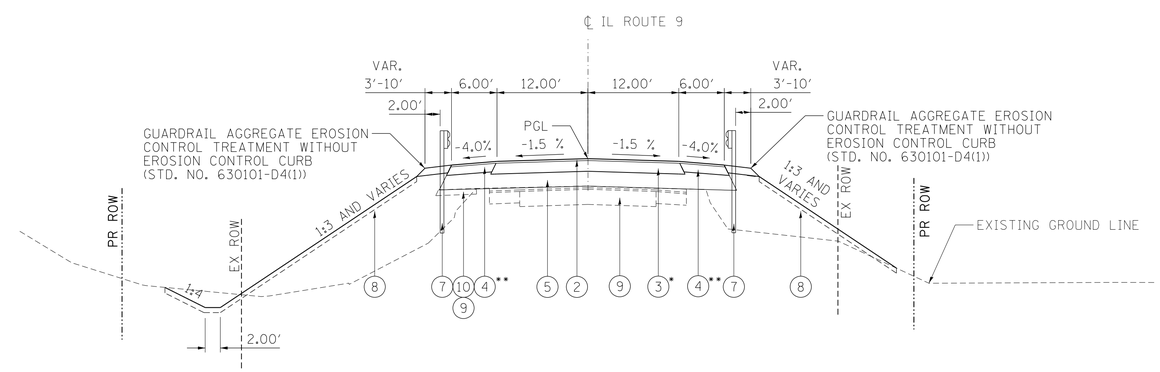

PROPOSED GUARDRAIL FILL SECTION
PROFILE CHANGE GREATER THAN 14″
STA 650+44.25 TO STA 653+53

* NOTE: IN AREAS WHERE THE HMA BINDER COURSE IS CONSTRUCTED ON TOP OF SUB-BASE GRANULAR MATERIAL, THE BINDER THICKNESS SHALL BE 9 1/2″.

** NOTE: TOTAL HMA SHOULDER THICKNESS IS 9″ IN THIS SECTION.

TERRA ENGINEERING LTD.	USER NAME = TERRA	DESIGNED - CL	REVISED -
		DRAWN - KJC	REVISED -
	PLOT SCALE = N/A	CHECKED - LVA	REVISED -
	PLOT DATE = 3/19/2013	DATE - 03/20/13	REVISED -

STATE OF ILLINOIS
DEPARTMENT OF TRANSPORTATION

PROPOSED TYPICAL SECTIONS
IL 9 OVER MUD CREEK

SCALE: N/A | SHEET NO. 2 OF 2 SHEETS | STA. | TO STA.

F.A.P. RTE.	SECTION	COUNTY	TOTAL SHEETS	SHEET NO.
693	(119BR) BR	TAZEWELL	80	12
		CONTRACT NO. 68757		
		ILLINOIS FED. AID PROJECT		

$PENTBL1$
$PLTDRVS$
$SYSPRINTER_NAME$
M:\IL RT 9 OVER MUD CREEK\CIVIL\CADD Sheets\D468757-sht-typical_02.dgn