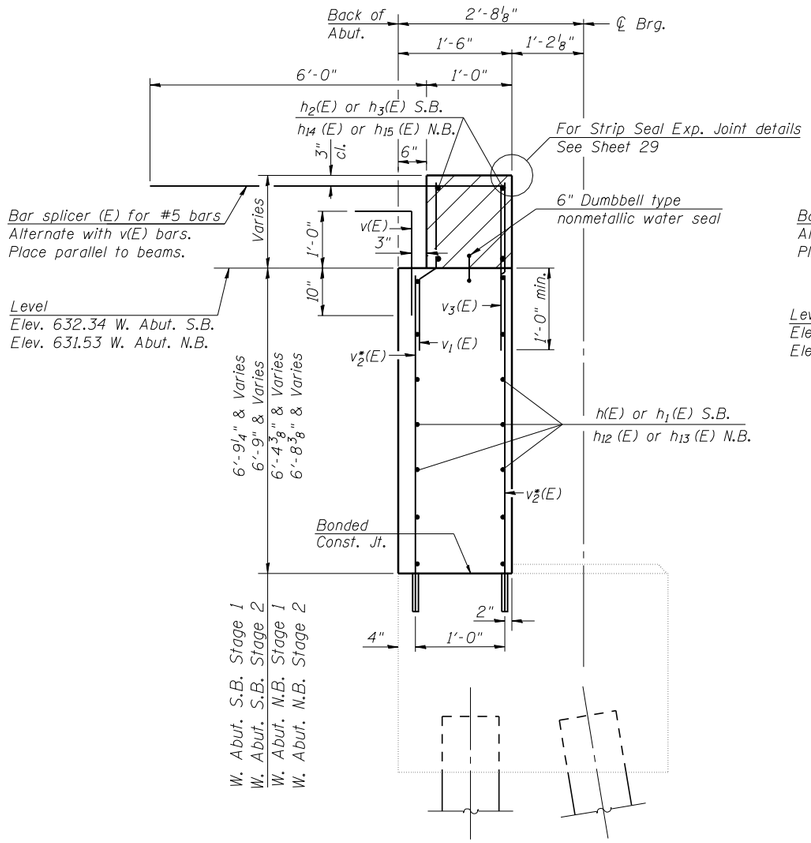

SEC. THRU WEST ABUTMENTS

(Dimensions at Rt. L's)

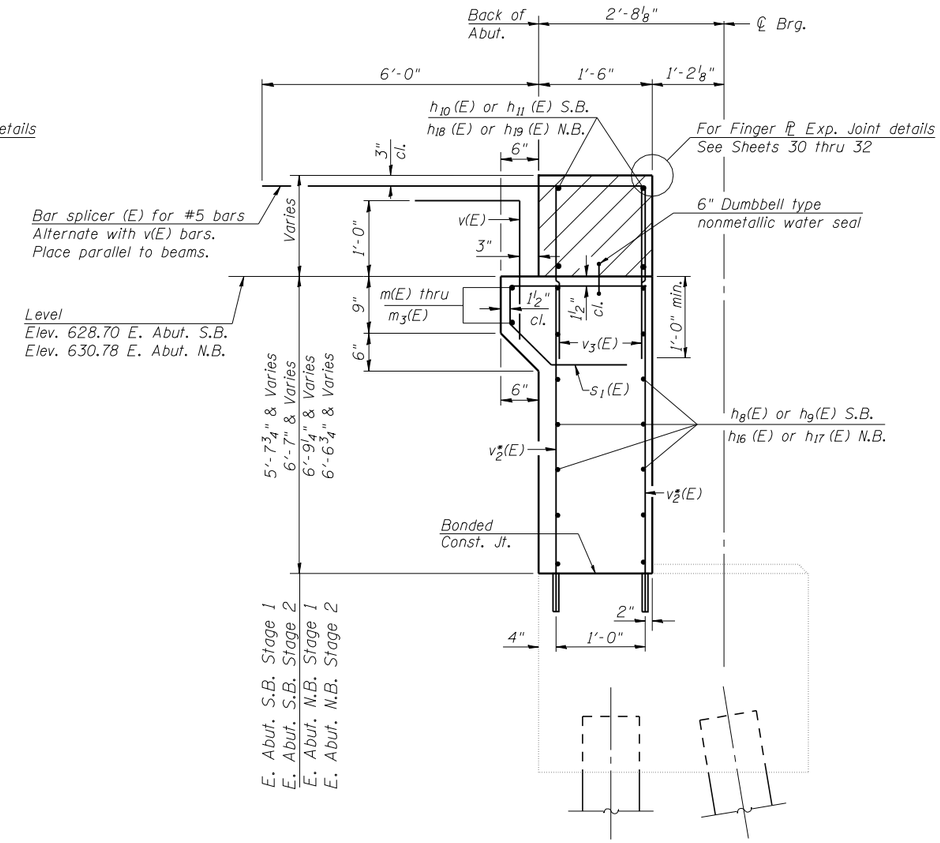

SEC. THRU EAST ABUTMENTS

(Dimensions at Rt. L's)

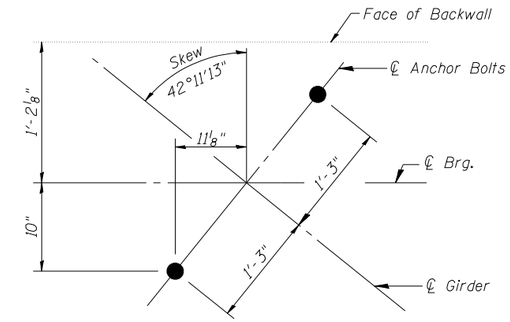

ANCHOR BOLT LAYOUT

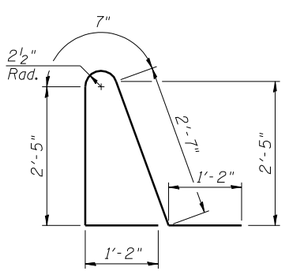

BAR d2(E)

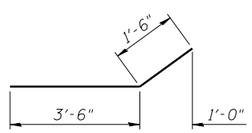

BAR h4(E)

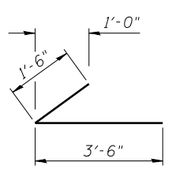

BAR h5(E)

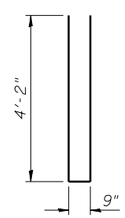

BAR n(E)

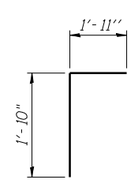

BAR v(E)

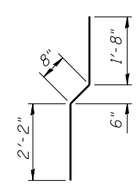

BAR v1(E)

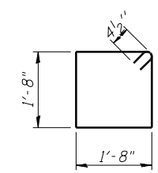

BARS s(E)

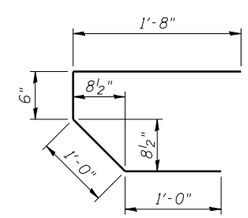

BAR s1(E)

NOTE

Plan elevations relative to the existing structure have been taken from existing plans and reduced by 0.38 feet to match benchmark datum.

EXISTING BEARING SEAT ELEVATIONS S.N. 054-0060 (SB)

	A	B	C	D	E	F	G
West Abutment	625.59	625.65	625.65	625.81	625.88	625.74	625.57
East Abutment	622.12	622.40	622.69	622.92	623.12	623.06	623.06

EXISTING BEARING SEAT ELEVATIONS S.N. 054-0061 (NB)

	H	I	J	K	L	M	N
West Abutment	625.17	625.26	625.32	625.18	625.00	624.91	624.83
East Abutment	624.01	624.23	624.41	624.41	624.35	624.29	624.22