Proposed Typical Section
Sta 100+12 to Sta 101+50

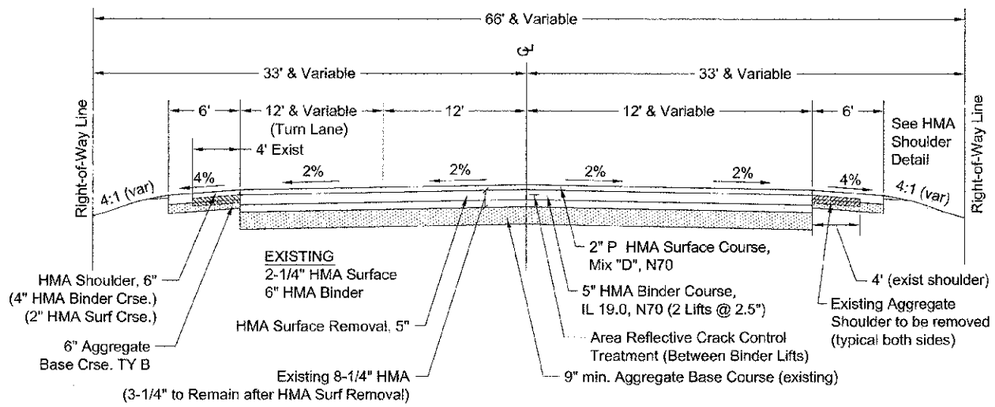

Proposed Typical Section
Sta 111+50 to Sta 117+00

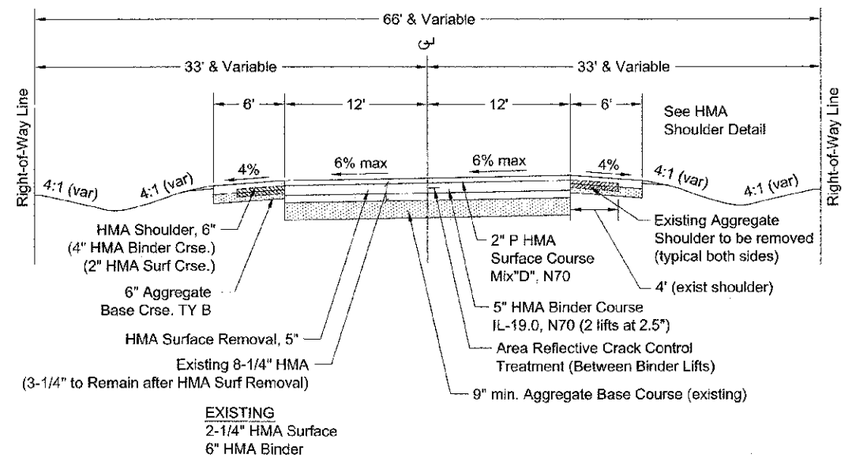

Proposed Typical Section
Sta 101+50 to Sta 111+50
Sta 117+00 to Sta 130+40

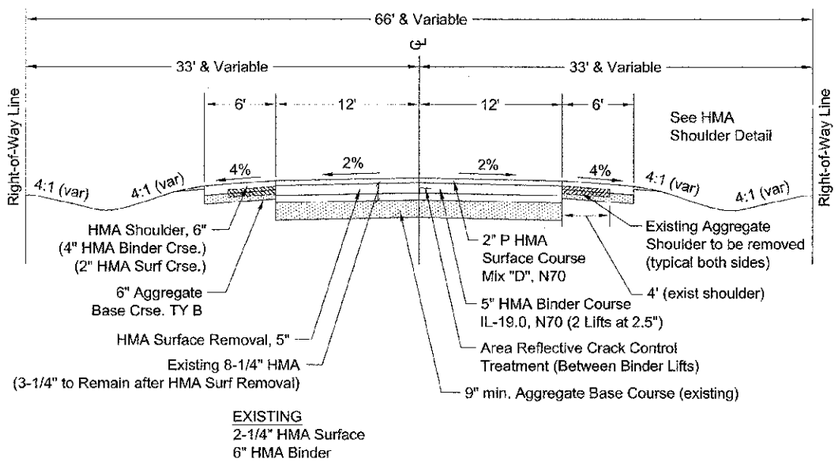

Proposed Typical Section
Sta 130+40 to Sta 133+14

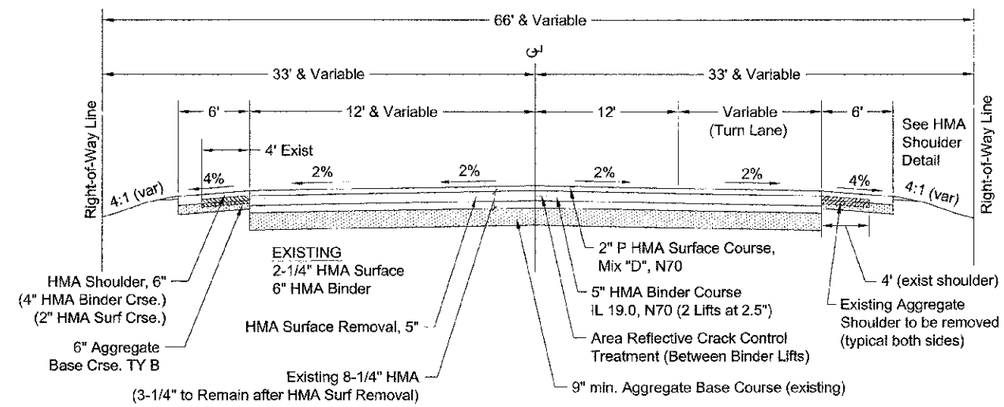

Proposed HMA Shoulder
(Typical)

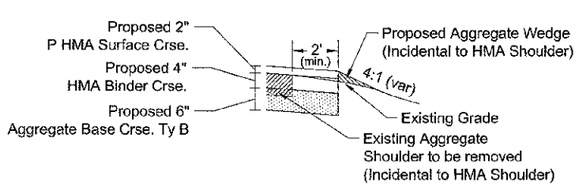

Curb Replacement Detail
Sta 105+00 Lt, 105+50 Lt & 132+92 Lt

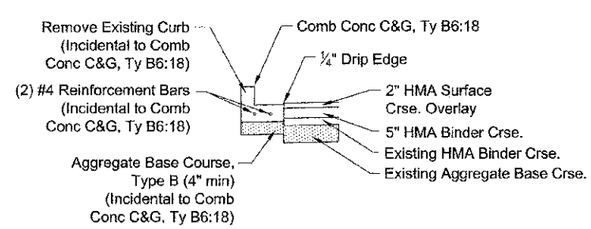

Commercial Driveway Typical Section
Sta 102+47 Lt

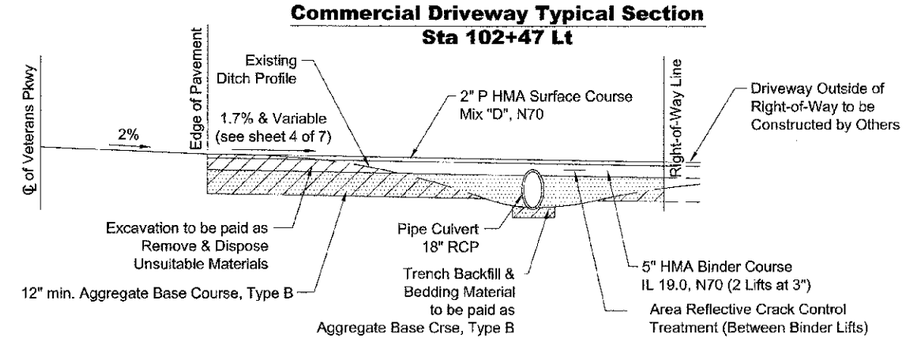

City of Rochelle
Engineering Department
417 N. 6th St. Rochelle, IL 61068

PROJECT:

Veterans Parkway
IL Rt 251 to S. Main St.
MFT Sec. #11-00111-00-RS

REVISIONS			
REV	DESCRIPTION	DATE	APPROVED

DRAWING: **Typical Sections**

DRAWN BY: CW	SCALE	SHEET
CHECKED BY: ST	HORZ SCALE: NA	3 of 7