Note:
All steel rail elements shall be galvanized according to Article 509.05 of the Standard Specifications.

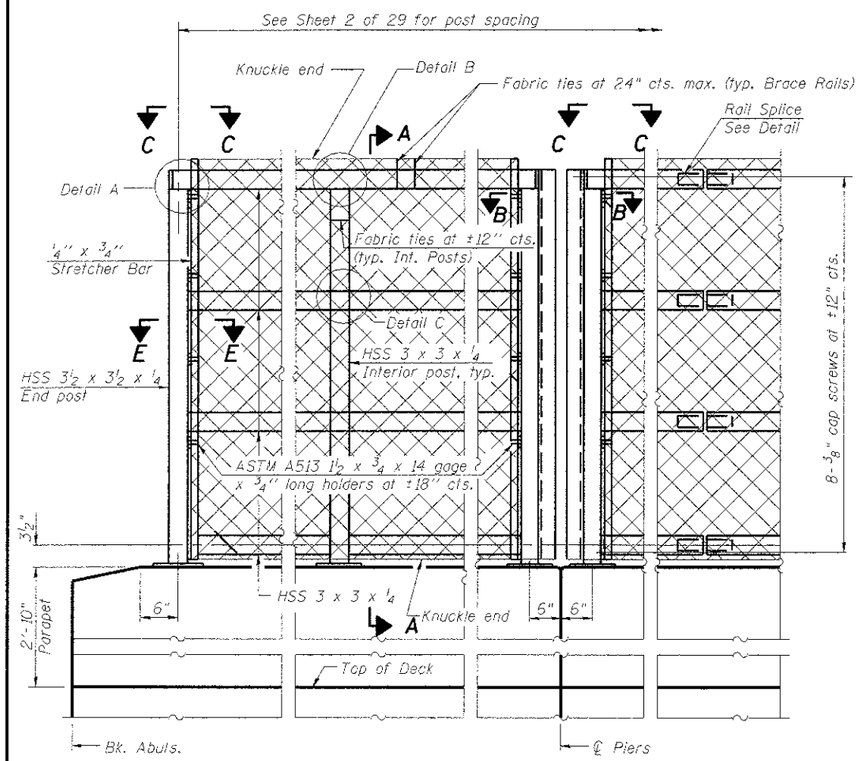

ELEVATION
(Inside Face)

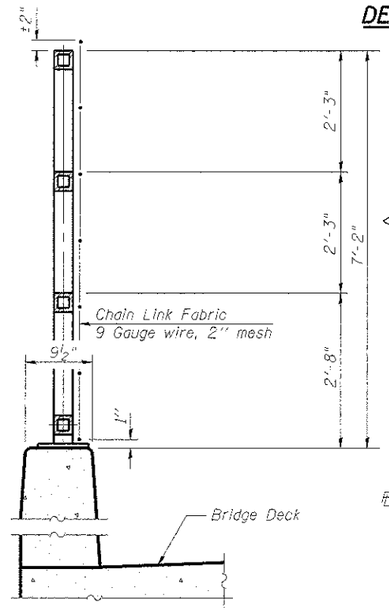

SECTION A-A

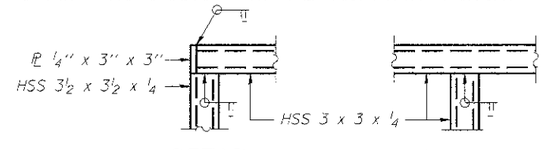

DETAIL A DETAIL B DETAIL C

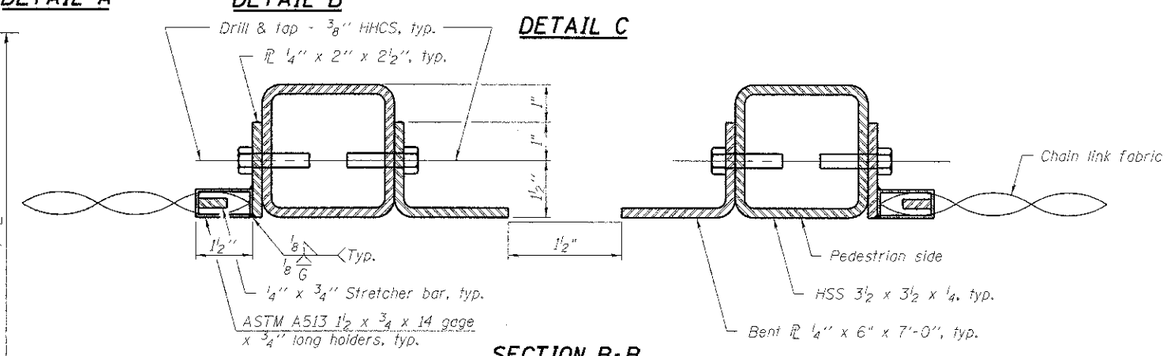

SECTION B-B
(Over Piers)

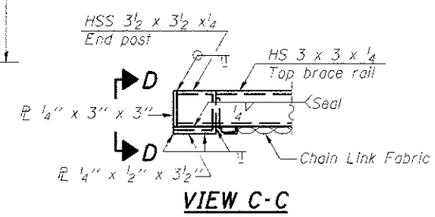

VIEW C-C

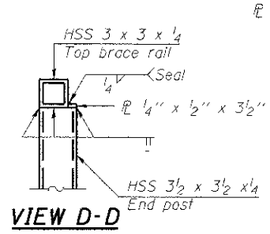

VIEW D-D

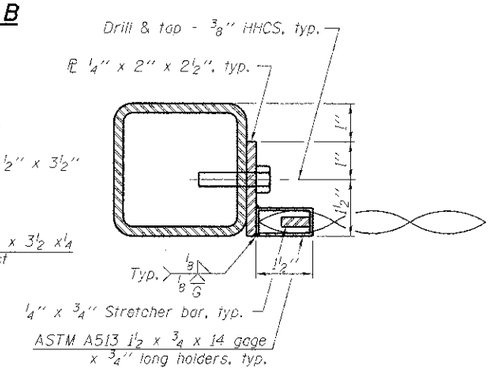

SECTION E-E

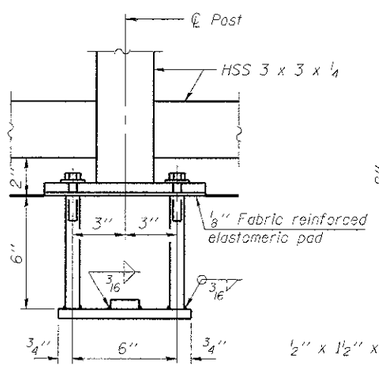

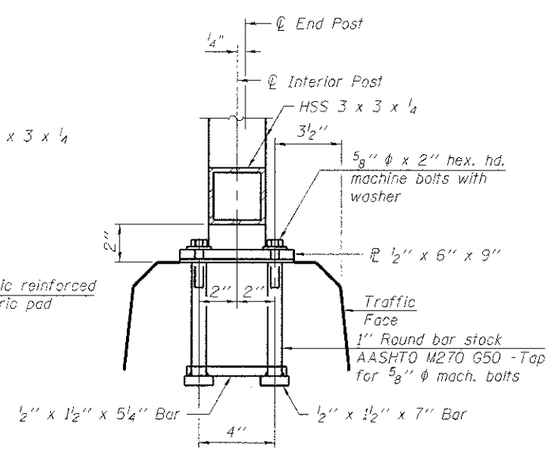

ANCHOR BOLT DETAILS

In lieu of the cast-in-place anchor device shown, the Contractor has the option of drilling and setting 5/8" ϕ anchor rods according to Article 509.06 of the Standard Specifications. Embedment shall be according to the manufacturer's specifications.

*Variable - See Plans
(10'-0" Maximum Post Spacing)

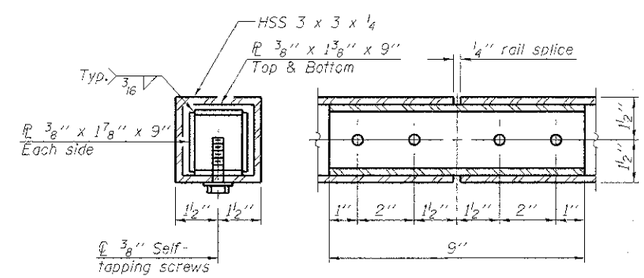

RAIL SPLICE

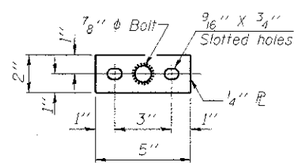

BASE PL
(Handrail)

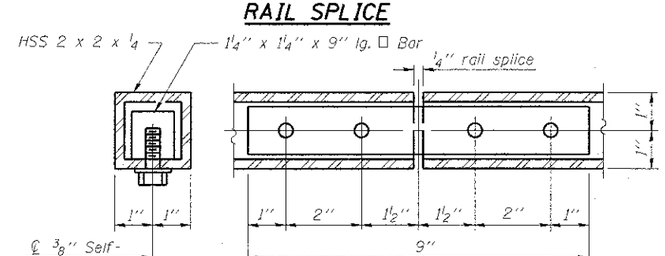

HANDRAIL SPLICE

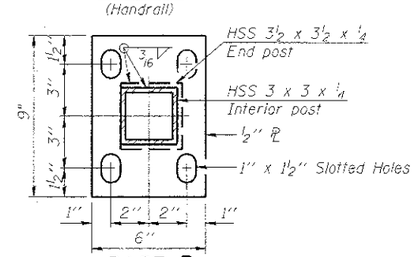

BASE PL

BILL OF MATERIAL

Item	Unit	Quantity
Bridge Fence Railing	Foot	370

FILE NAME =	USER NAME = bgj	DESIGNED - ADL	REVISED -
D:\Files\1.2015\05 Plans\Bridge Plans Without Structural Steel\Bridge Fence Railing.dgn		CHECKED - RJP	REVISED -
	PLOT SCALE = 0.083304 ' / IN.	DRAWN - RJP	REVISED -
	PLOT DATE = 11/5/2012	CHECKED - ADL	REVISED -

ADAMS COUNTY
HIGHWAY DEPARTMENT

BRIDGE FENCE RAILING
S.N. 001-3338

SHEET NO. 13 OF 29 SHEETS

F.A.P. RTE.	SECTION	COUNTY	TOTAL SHEETS	SHEET NO.
1598	11-00218-00-BR	ADAMS	53	29

CONTRACT NO. 93590

ILLINOIS FED. AID PROJECT

Klingner & Associates P.C.