Notes:
See sheet 12 of 28 for Sections C-C & D-D and View E-E & F-F.
$a_3(E)$, $a_4(E)$, $a_5(E)$ and $a_6(E)$ bar spacings measured along ℄ Rdwy.

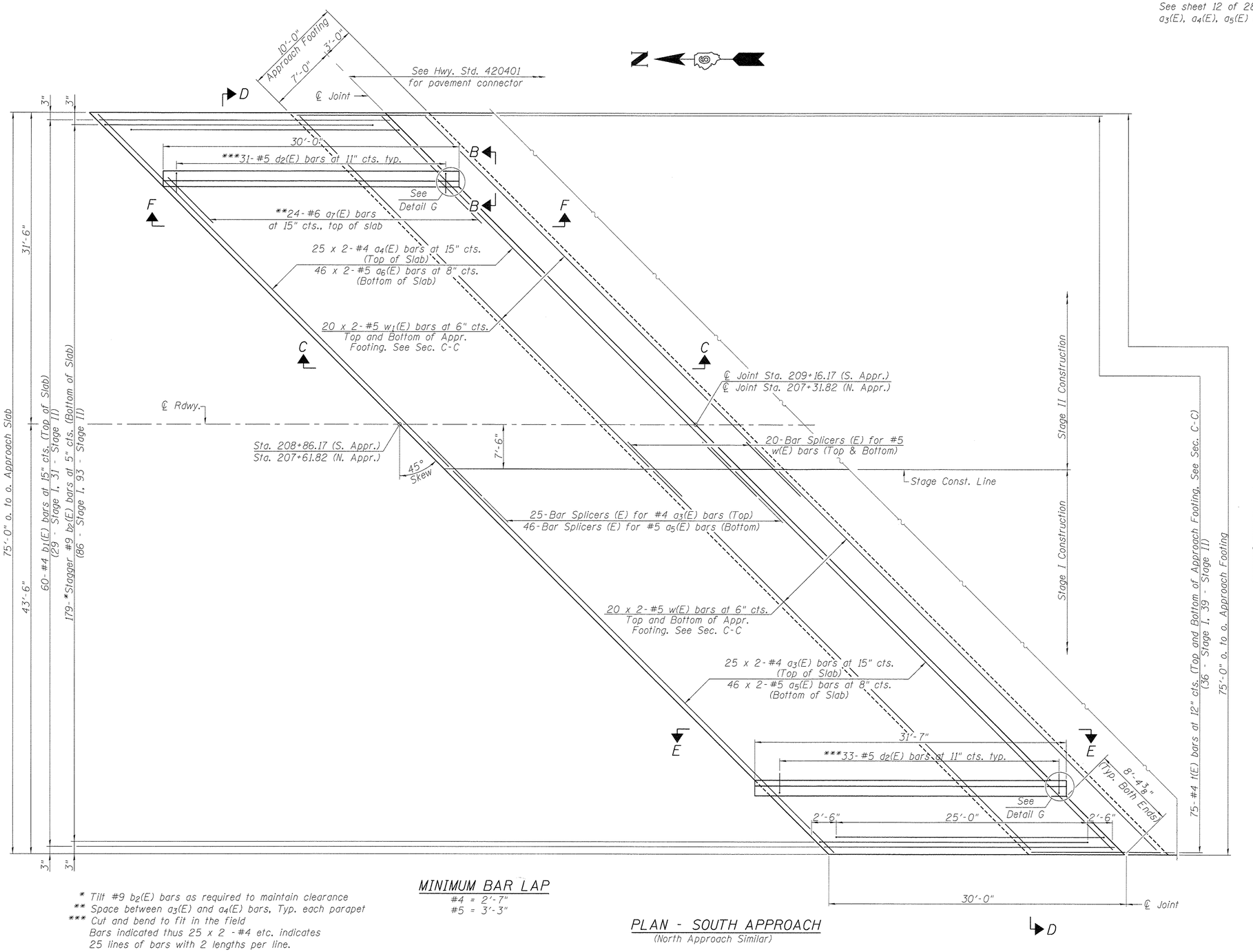

PLAN - SOUTH APPROACH
(North Approach Similar)

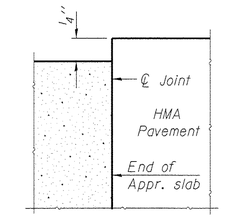

FLEXIBLE PAVEMENT
DETAIL A

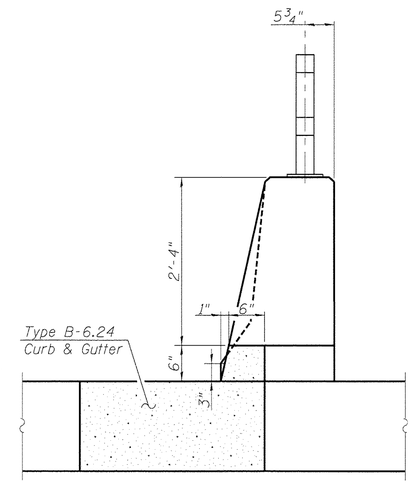

VIEW B-B

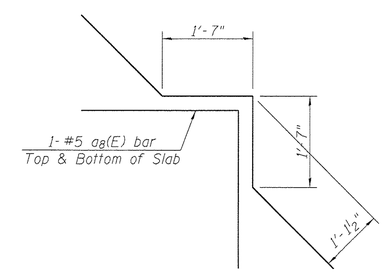

DETAIL G
(Parapet not shown for clarity)

MINIMUM BAR LAP
#4 = 2'-7"
#5 = 3'-3"

* Tilt #9 $b_2(E)$ bars as required to maintain clearance
** Space between $a_3(E)$ and $a_4(E)$ bars, Typ. each parapet
*** Cut and bend to fit in the field
Bars indicated thus 25 x 2 -#4 etc. indicates 25 lines of bars with 2 lengths per line.

(Sheet 1 of 2)

FILE NAME =	USER NAME =	DESIGNED -	REVISED -
		CHECKED -	REVISED -
	PLOT SCALE =	DRAWN -	REVISED -
	PLOT DATE =	CHECKED -	REVISED -

Allen Henderson & Associates, Inc.
Civil and Structural Engineers Springfield, IL.
62703 Phone: (217)544-8033 IL. Design Firm No. 184-001907

BRIDGE APPROACH SLAB DETAILS
STRUCTURE NO. 084-6019
SHEET NO. 11 OF 28 SHEETS

F.A.U. RTE.	SECTION	COUNTY	TOTAL SHEETS	SHEET NO.
8006	10-00470-00-BR	SANGAMON	90	51
		CONTRACT NO. 93600		
		ILLINOIS FED. AID PROJECT		