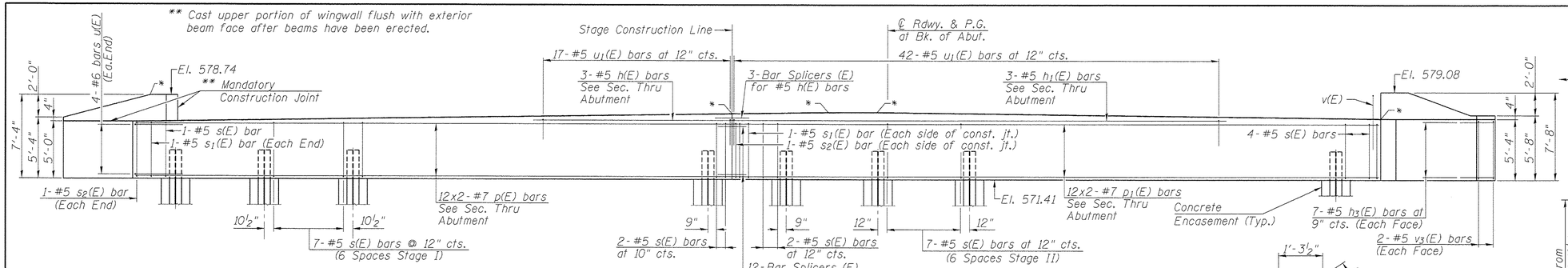

ELEVATION
(Looking North)

Piles located within the Stage I Construction limits shall not be driven prior to the de-energizing of the aerial electrical lines (hereafter known as 'utility adjustment') located along the west side of Chatham Road. The electrical lines are owned and maintained by City, Water, Light and Power (CWLP). CWLP shall be responsible for all work required for the utility adjustment. The Contractor shall coordinate and accommodate the utility adjustment with CWLP. Rob Cunningham of CWLP shall be contacted a minimum of two months prior to driving piles at 217-757-8520. All costs associated with the utility adjustment shall not be paid for seperately but shall be included in the cost of Driving Piles.

PILE DATA

Type:	Steel HP 12x63
Nominal Required Bearing:	497 Kips
Factored Resistance Available:	260 Kips
Estimated Pile Length:	66'
Number of Production:	13
Number of Test Piles:	1***

*** Driven to 110% of the Nominal Required Bearing

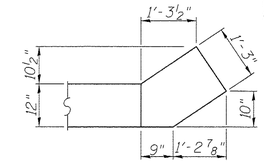

** DETAIL A

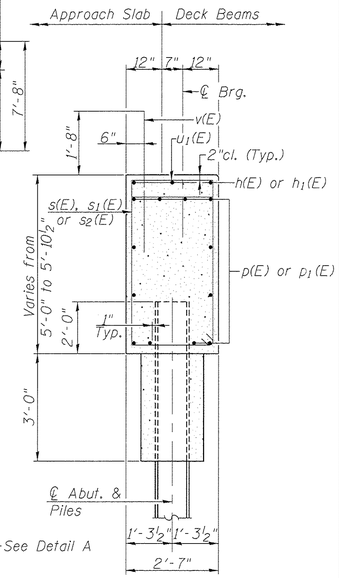

SECTION THRU ABUT.
(Dimensions are at Rt. L's)

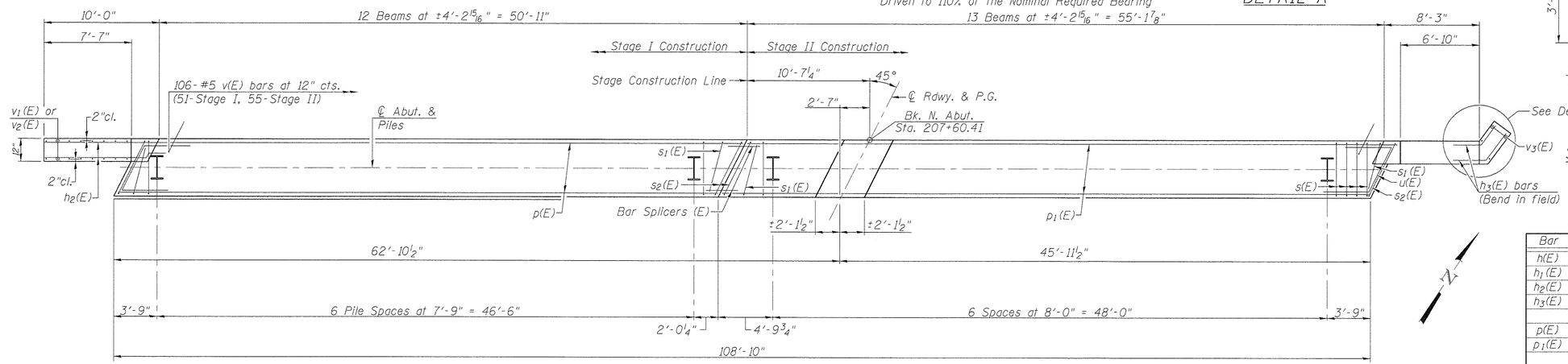

PLAN

**The contractor shall field verify the location of the existing retaining wall and the proposed dimensions and make necessary approved adjustments prior to construction or ordering of materials. Adjustments shall not be cause for additional compensation for a change in scope of the work, however, the contractor will be paid for the quantity actually furnished at the unit price bid for the work.

MINIMUM BAR LAP
#7 bar = 5'-10"

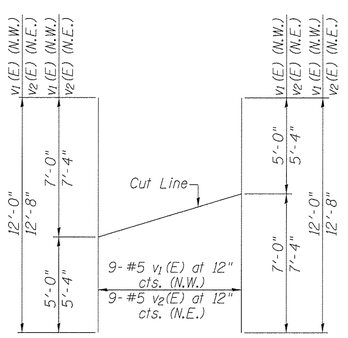

$v_1(E)$ & $v_2(E)$ - BAR CUT DIAGRAM
Order $v_1(E)$ & $v_2(E)$ bars full length. Layout in field according to diagram. Cut $v_1(E)$ & $v_2(E)$ bars along cut line. Use remainder of each bar in opposite face.

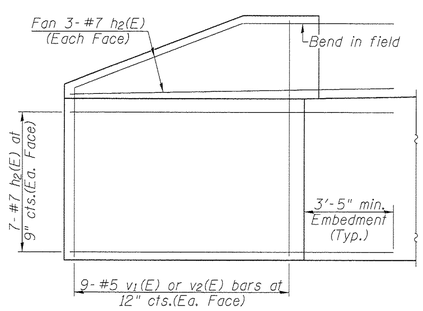

WINGWALL ELEVATION
(Showing Reinforcement)
See $v_1(E)$ & $v_2(E)$ bar cut diagram

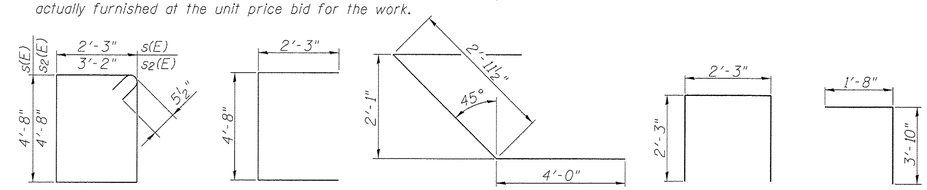

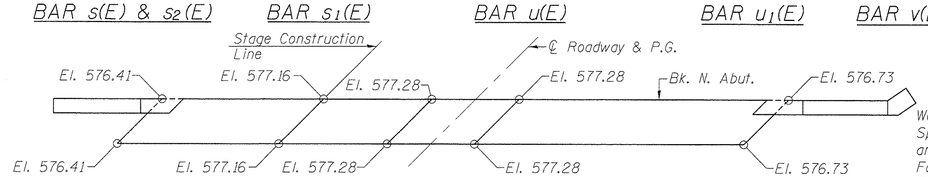

* BEARING SEAT DIAGRAM

NORTH ABUTMENT BILL OF MATERIAL

Bar	No.	Size	Length	Shape
h(E)	3	#5	16'-3"	
h1(E)	3	#5	41'-3"	
h2(E)	40	#7	13'-8"	
h3(E)	14	#5	5'-6"	
p(E)	24	#7	29'-0"	
p1(E)	24	#7	31'-0"	
s(E)	93	#5	14'-9"	
s1(E)	4	#5	9'-2"	
s2(E)	4	#5	16'-7"	
u(E)	8	#6	11'-0"	
u1(E)	59	#5	6'-9"	
v(E)	106	#5	5'-6"	
v1(E)	18	#5	12'-0"	
v2(E)	18	#5	12'-8"	
v3(E)	4	#5	5'-4"	
Structure Excavation			Cu. Yd.	50
Concrete Structures			Cu. Yd.	62.0
Reinforcement Bars, Epoxy Coated			Pound	7510
Furnishing Steel Piles HP 12x63			Foot	858
Driving Piles			Foot	858
Test Pile, Steel HP 12x63			Each	1
Concrete Encasement			Cu. Yd.	4.9

Work with sheet 23 of 28
Space reinforcement in cap to miss beam anchor dowels.
For details of Bar Splicers, see sheet 25 of 28.
For details of piles and Concrete Encasement, see sheet 24 of 28.

FILE NAME =	USER NAME =	DESIGNED -	REVISED -
		CHECKED -	REVISED -
	PLOT SCALE =	DRAWN -	REVISED -
	PLOT DATE =	CHECKED -	REVISED -

Allen Henderson & Associates, Inc.
Civil and Structural Engineers Springfield, IL.
62703 Phone: (217)544-8033 IL. Design Firm No. 184-001907

NORTH ABUTMENT
STRUCTURE NO. 084-6019
SHEET NO. 19 OF 28 SHEETS

F.A.U. RTE.	SECTION	COUNTY	TOTAL SHEETS	SHEET NO.
8006	10-000470-00-BR	SANGAMON	90	59

CONTRACT NO. 93600
ILLINOIS FED. AID PROJECT