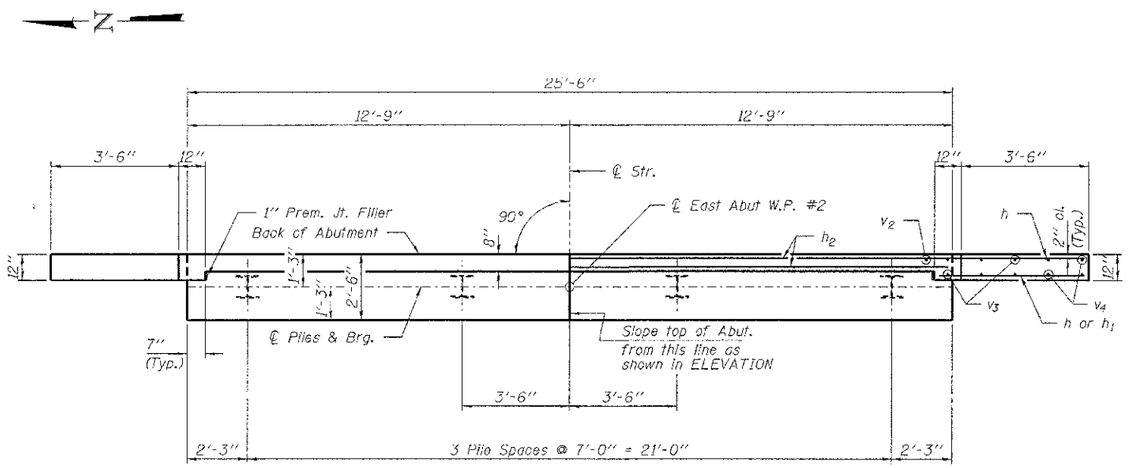

PLAN

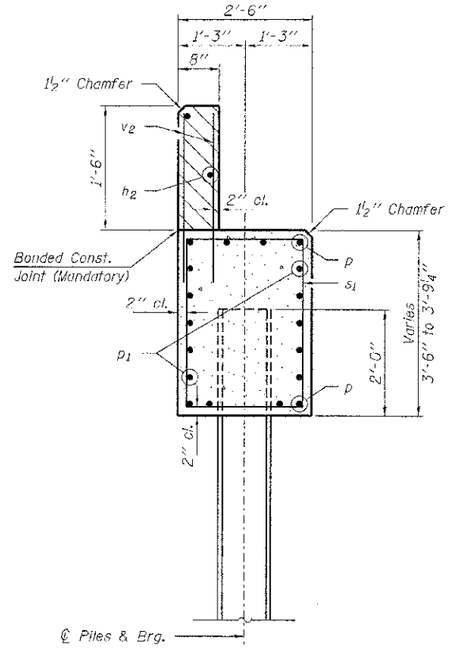

SECTION A-A

Hatched area to be poured after beams are in place.

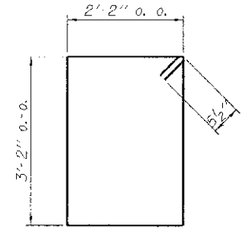

BAR s_1

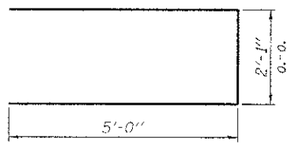

BAR u

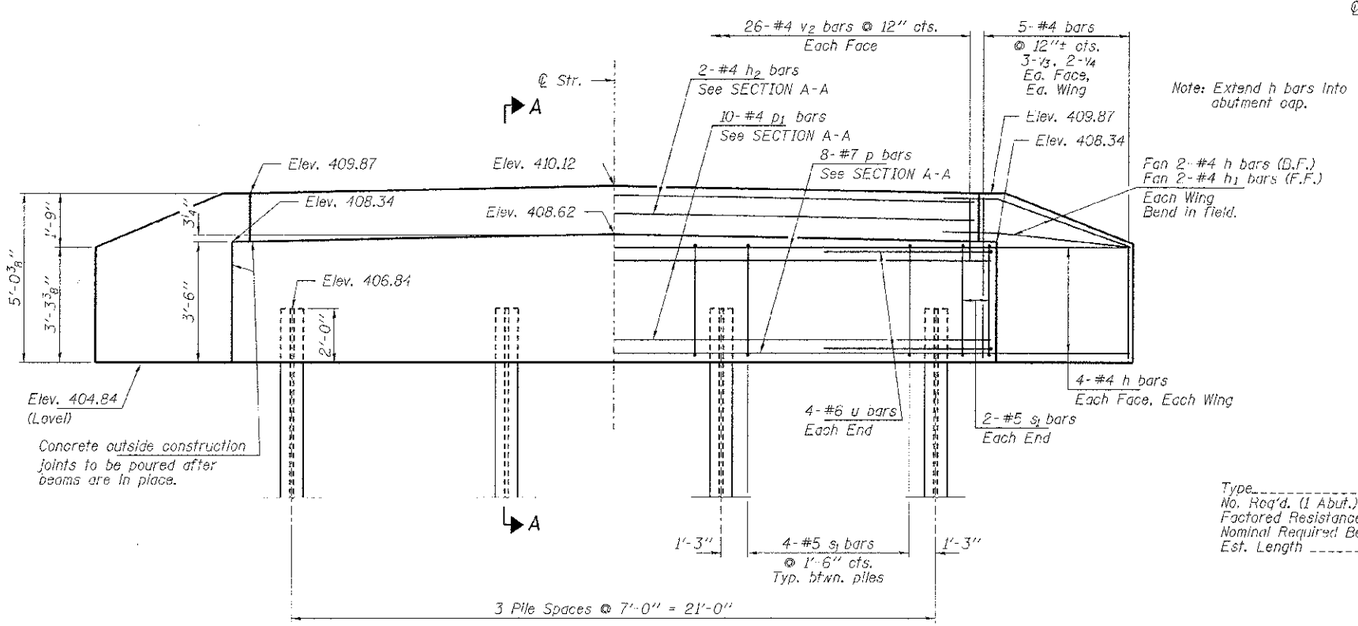

ELEVATION
(Looking East)

Note: Extend h bars into abutment cap.

PILE DATA

Type ..... Steel HP8x36
No. Req'd. (1 Abut.) 4
Factored Resistance Available (Rf) ..... 157 Kips/Pile
Nominal Required Bearing (Rn) ..... 286 Kips/Pile
Est. Length ..... 15 Ft/Pile

BILL OF MATERIAL - E. ABUT.

BAR	NO.	SIZE	LENGTH	SHAPE
h	20	#4	5'-6"	
h_1	4	#4	4'-0"	
h_2	2	#4	25'-2"	
p	8	#7	25'-2"	
p_1	10	#4	25'-2"	
s_1	16	#5	11'-7"	
u	8	#6	12'-1"	
v_3	12	#4	4'-6"	
v_4	8	#4	3'-0"	
v_2	52	#4	2'-4"	
Concrete Structures			Cu. Yd.	10.8
Reinforcement Bars			Pound	1,170
Steel Piles HP8x36			Foot	60

FILE NAME = 120023-cht-bridge.dgn	USER NAME =	DESIGNED - L.A.P.	REVISED -	STATE OF ILLINOIS UNION COUNTY HIGHWAY DEPARTMENT	EAST ABUTMENT STRUCTURE NO. 091-3241
HAMPTON, LENZINI AND RENWICK, INC. 3005 STEVENSON DRIVE, SUITE 201 SPRINGFIELD, ILLINOIS 62703		CHECKED - S.W.M.	REVISED -		
HLR ILLINOIS PROFESSIONAL DESIGN FIRM LS / PE / SE CORP. 184-000150	PLOT SCALE =	DRAWN - R.D.H.	REVISED -		
	PLOT DATE - 3/15/2013	CHECKED - S.W.M.	REVISED -		SHEET NO. 7 OF 9 SHEETS

T.R.	SECTION	COUNTY	TOTAL SHEETS	SHEET NO.
239	11-01201-00-BR	UNION	20	18
COUNTY UNIT ROAD DISTRICT		CONTRACT NO. 99503		
ILLINOIS: FED. AID PROJECT BROS-0181(058)				