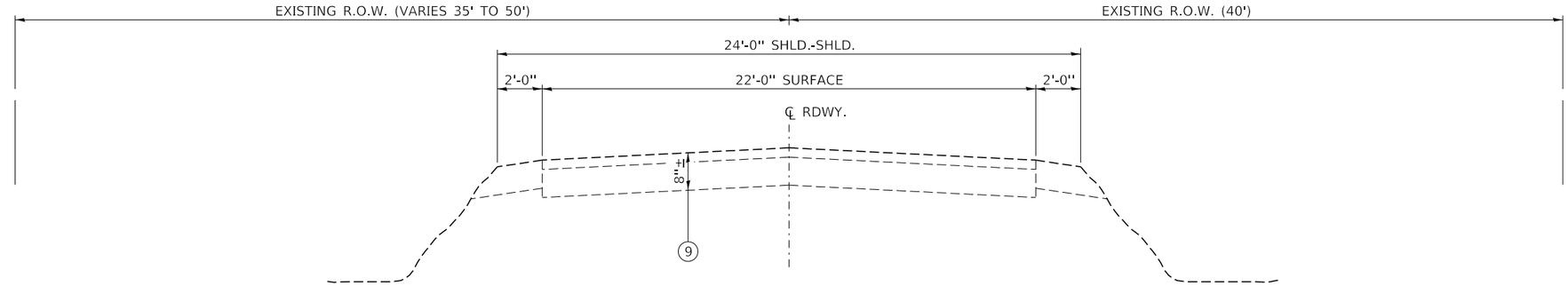

EXISTING TYPICAL CROSS SECTION

STA. 279+30 TO 283+10

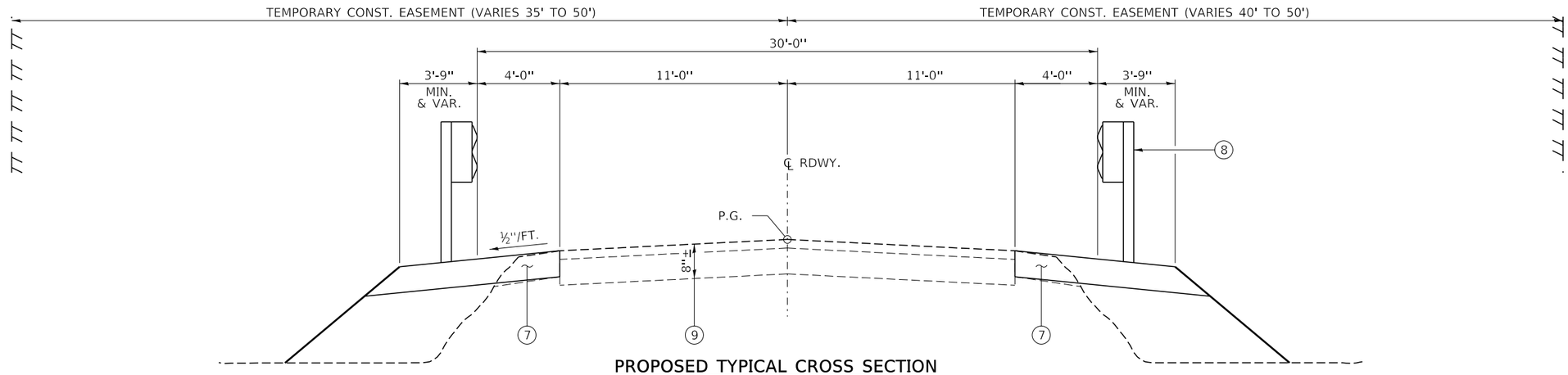

PROPOSED TYPICAL CROSS SECTION

STA. 279+30 TO 280+60 AND 281+80 TO 283+10

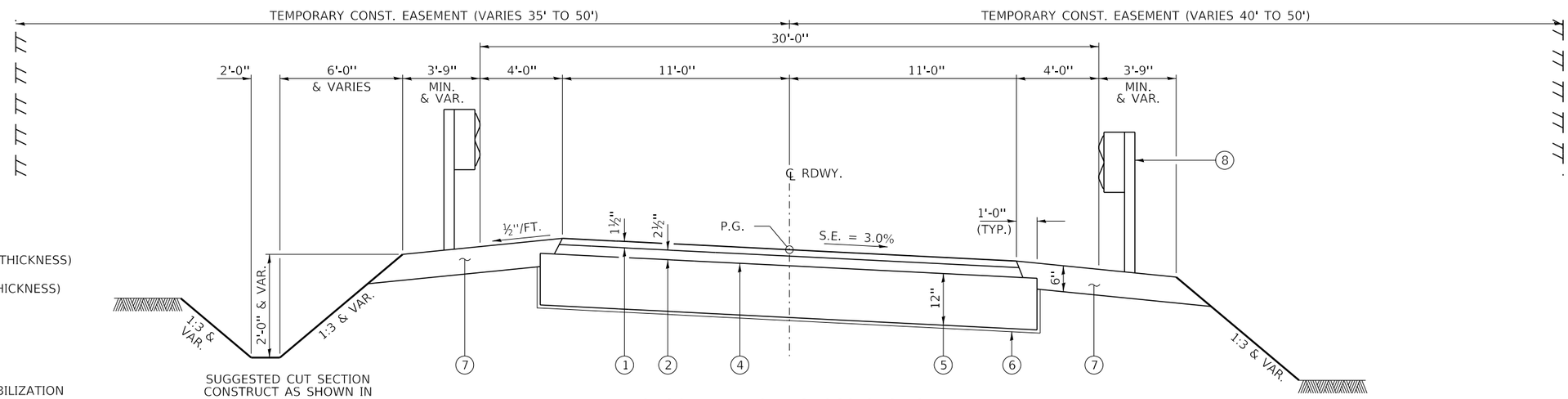

SUGGESTED CUT SECTION
CONSTRUCT AS SHOWN IN
STATION CROSS SECTIONS

PROPOSED TYPICAL CROSS SECTION

STA. 280+60 TO 281+80

LEGEND

1. HMA SURFACE COURSE, MIX C, N50 (1½" THICKNESS)
2. HMA BINDER COURSE, IL 9.5, N50 (2½" THICKNESS)
3. NA 1
4. BITUMINOUS MATERIALS (TACK COAT)
5. CLASS D PATCHES, TYPE II (12")
6. GEOTECHNICAL FABRIC FOR GROUND STABILIZATION
7. AGGREGATE SHOULDERS, TYPE B (6")
8. SPBGR OR TRAFFIC BARRIER TERMINAL TY. 1 SPL TANGENT
9. EXISTING HMA SURFACE ON AGGREGATE BASE WITH AGGREGATE SHOULDERS

FILE NAME = 160283-sht-typsections.dgn	USER NAME = tlmk	DESIGNED - S.W.M.	REVISED - 05/31/19 1
HAMPTON, LENZINI AND RENWICK, INC. 3085 STEVENSON DRIVE, SUITE 201 SPRINGFIELD, ILLINOIS 62703 ILLINOIS PROFESSIONAL DESIGN FIRM LS / PE / SE CORP. 184.000959		DRAWN - M.M.P.	REVISED -
	PLOT SCALE = $SCALE$	CHECKED - S.W.M.	REVISED -
	PLOT DATE = 5/31/2019	DATE - 04/12/19	REVISED -

STATE OF ILLINOIS
JEFFERSON COUNTY HIGHWAY DEPARTMENT

TYPICAL CROSS SECTIONS

SCALE: | SHEET NO. 1 OF 2 SHEETS | STA. | TO STA.

F.A.S.	SECTION	COUNTY	TOTAL SHEETS	SHEET NO.
826	08-00200-00-BR	JEFFERSON	32	4
RICHVIEW ROAD / C.H. 10		CONTRACT NO. 99626		
		ILLINOIS	FED. AID PROJECT JBSF(319)	