F.A.I. RTE.	SECTION	COUNTY	TOTAL SHEETS	SHEET NO.
59	*	WILL	102	37
STA.		TO STA.		
FED. ROAD DIST. NO. 1	ILLINOIS	FED. AID PROJECT		

* 99(1&2)AC-R-2 CONTRACT NO. 60897

NOTES :

1. TRAFFIC CONTROL & PROTECTION FOR THE EXISTING WEST FRONTAGE ROAD SHALL BE IN ACCORDANCE WITH STANDARD 701326 AND 701006.
2. ANY CONFLICTING PAVEMENT MARKINGS SHALL BE REMOVED.

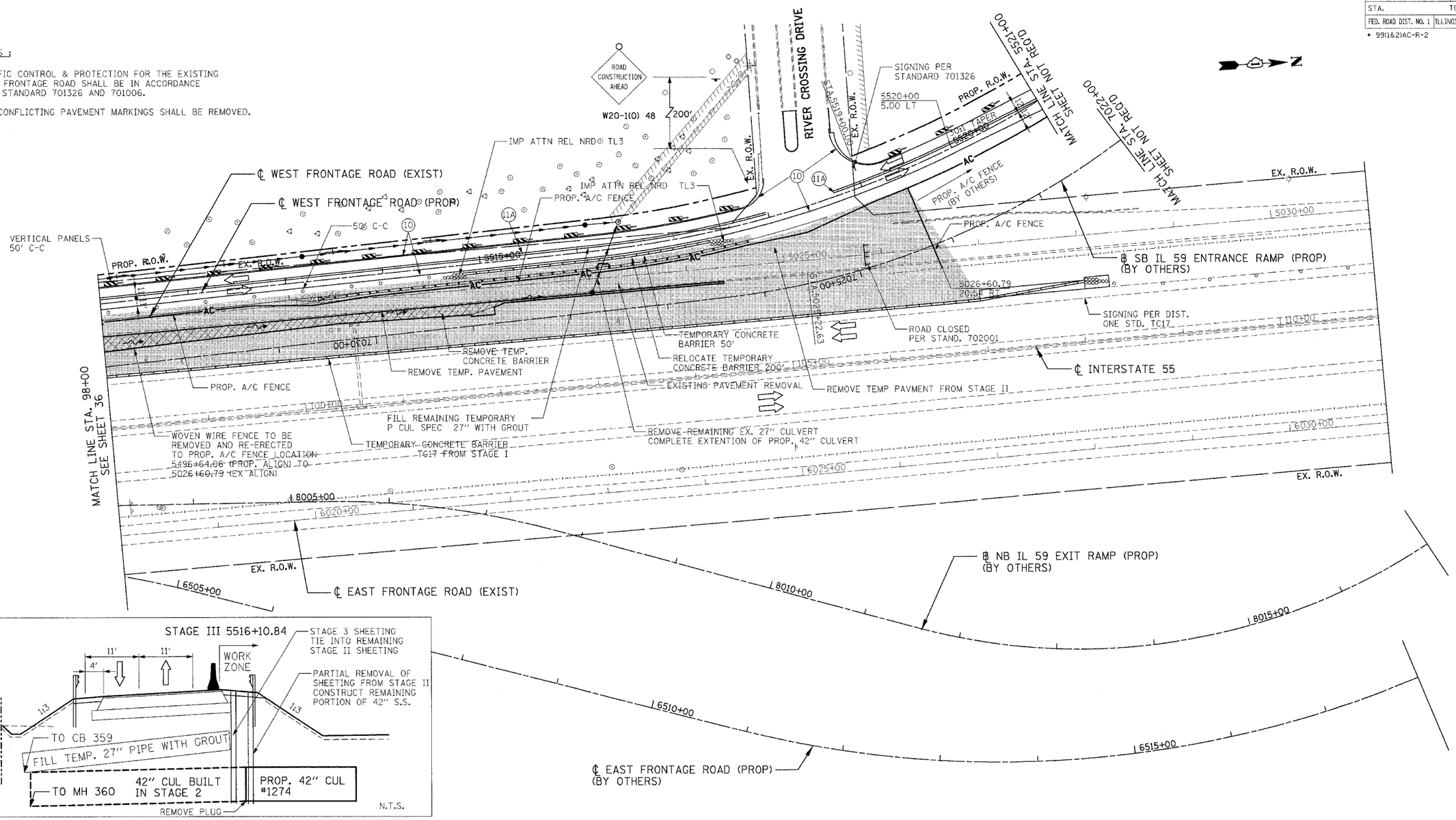

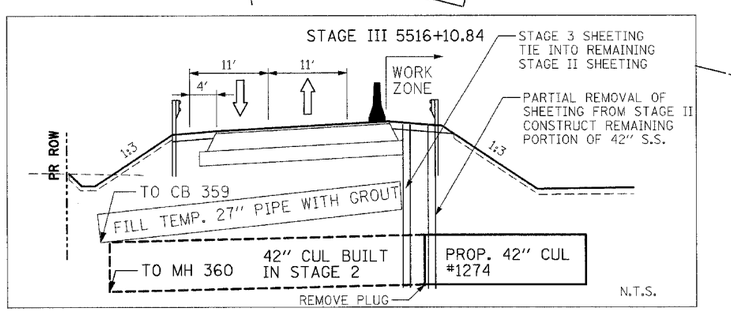

LEGEND

- WORK ZONE
- TEMP. PAVEMENT, UNLESS OTHERWISE NOTED
- TEMP. PAVT - PREVIOUS STAGE, UNLESS OTHERWISE NOTED
- PAVEMENT REMOVAL
- MILL AND RESURFACE PAVEMENT
- PLASTIC TYPE II BARRICADES OR DRUMS W/ STEADY BURN LIGHT
- TRAFFIC FLOW
- ARROW BOARD
- VERTICAL PANELS
- BARRICADE, TYPE III
- PROP TRAFFIC SIGN
- BARRICADES, TYPE II W/ FLASHING LIGHTS
- PROP. GUARDRAIL
- EXIST. GUARDRAIL
- PROP. TEMPORARY CONC. BARRIER WALL

LEGEND

(10) WET TEMPORARY PAVEMENT MARKING TAPE, TYPE III - 4" (WHITE)

(11A) WET TEMPORARY PAVEMENT MARKING TAPE, TYPE III - 4" (DOUBLE YELLOW) @ 11" C-C

(16) WET TEMPORARY PAVEMENT MARKING TAPE, TYPE III - 24" (WHITE)

REVISIONS	
NAME	DATE

ILLINOIS DEPARTMENT OF TRANSPORTATION
FAI 55 WEST FRONTAGE ROAD AT IL 59
SECTION: 99(1&2)AC-R-2

MAINTENANCE OF TRAFFIC STAGE III STA. 98+00 TO STA. 111+00

SCALE: 1" = 50' DRAWN BY: JP

DATE: 3/22/2007 CHECKED BY: ACL

TENG

TENG & ASSOCIATES, INC.
ENGINEERS&ARCHITECTS&PLANNERS
205 N. MICHIGAN AVE. CHICAGO, IL 60601
TELEPHONE: 312/616-0600

..\ALT0026A.DGN, ..\GPEOOGRURJGN, ..\XSC0025A.DGN, ..\MOT0025A.DGN, ..\MOT0026G.DGN, ..\DRA0026T.DGN, ..\TTB0026Z.DGN, ..\MOT0026K.DGN, ..\MOT0026H.DGN, ..\MOT0026J.DGN, ..\MOT0026L.DGN
4-23-2007, 14:34:2 T:\DOCUMENT\132790\CIVIL\DGN\MOT0025J.DGN
1 2 3 4 5 6 7 8 9 10 11 12 13 14 15 16 17 18 19 20 21 22 23 24 25 26 27 28 29 30 31 32 33 34 35 36 37 38 39 40 41 42 43 44 45 46 47 48 49 50 51 52 53 54 55 56 57 58 59 60 61 62 63