F.A.I. RTE.	SECTION	COUNTY	TOTAL SHEETS	SHEET NO.
59	*	WILL	102	67
STA.		TO STA.		
FED. ROAD DIST. NO. 1	ILLINOIS	FED. AID PROJECT		

* 26HB-1BR AND 114R-1
CONTRACT NO. 60363

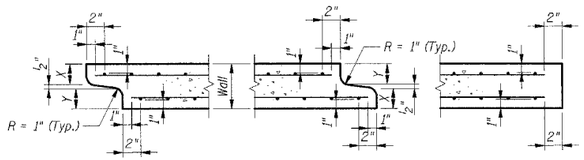

DETAIL A (Typ. Inlet End)

DETAIL B (Typ. Outlet End)

DETAIL C (Typ. Exposed End)

Note:
Inlet and outlet ends shall be compatible.

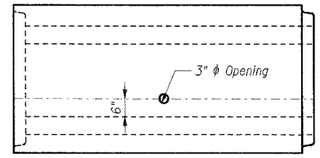

ELEVATION

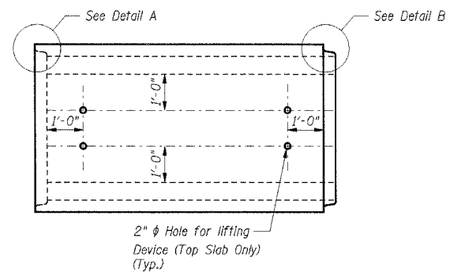

PLAN
(Location of lifting holes may be varied as needed to clear reinforcement)

STANDARD PRECAST BOX CULVERT SECTION

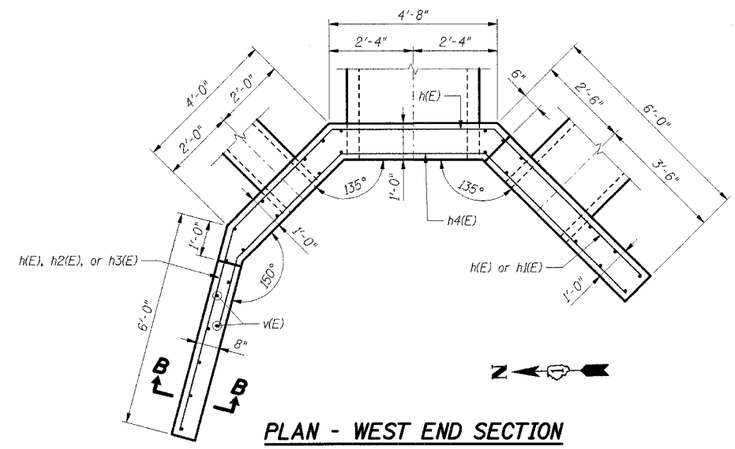

PLAN - WEST END SECTION

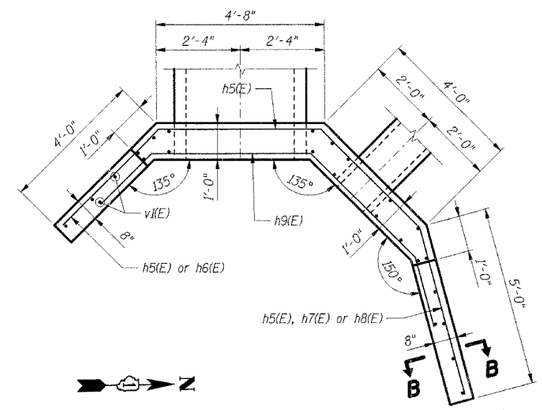

PLAN - EAST END SECTION

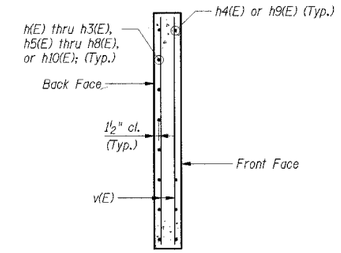

SECTION B-B

BAR LIST - WEST HEADWALL

Bar	No.	Size	Length	Shape
h(E)	4	#6	19'-11"	
h1(E)	2	#6	5'-6"	
h2(E)	3	#6	6'-11"	
h3(E)	2	#6	9'-8"	
h4(E)	4	#4	15'-7"	
h10(E)	1	#6	2'-0"	
v(E)	28	#4	5'-9"	
Item			**Unit**	**Total**
Reinforcement Bars***			lbs	350
Concrete Structures***			Cu Yd	3.2

BAR LIST - EAST HEADWALL

Bar	No.	Size	Length	Shape
h5(E)	4	#6	16'-11"	
h6(E)	5	#6	3'-9"	
h7(E)	1	#6	5'-11"	
h8(E)	4	#6	8'-8"	
h9(E)	4	#4	12'-6"	
v(E)	25	#4	5'-9"	
Item			**Unit**	**Total**
Reinforcement Bars***			lbs	320
Concrete Structures***			Cu Yd	2.6

*** For information only, cost included with Box Culvert End Sections, Special.

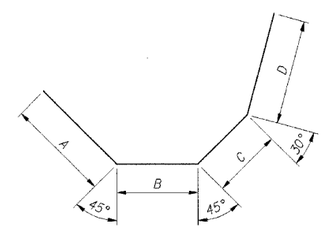

Bar h(E), h4(E), h5(D), h9(E)

Bar	A	B	C	D
h(E)	5'-9"	4'-6"	3'-10½"	5'-9½"
h4(E)	5'-6"	4'-0"	4'-1"	2'-0"
h5(E)	3'-9"	4'-6"	3'-10½"	4'-9½"
h9(E)	2'-0"	4'-5"	4'-1"	2'-0"

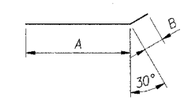

Bar h2(E), h3(E), h7(E), h8(E)

Bar	A	B
h2(E)	5'-9½"	1'-1½"
h3(E)	5'-9½"	3'-10½"
h7(E)	4'-9½"	1'-1½"
h8(E)	4'-9½"	3'-10½"

Reinforcement Notes:
(1) Bend bars in the field to fit as required.
(2) Cut bars according to Cutting Diagram and use reminder in other side of the Headwall.

Notes:
1. Bars indicated thus: 4x2-#5 etc. indicate 4 lines of bars with 2 lengths per line.
2. B.F indicates Back Face
3. F.F. indicates Front Face
E.F. indicates Each Face.

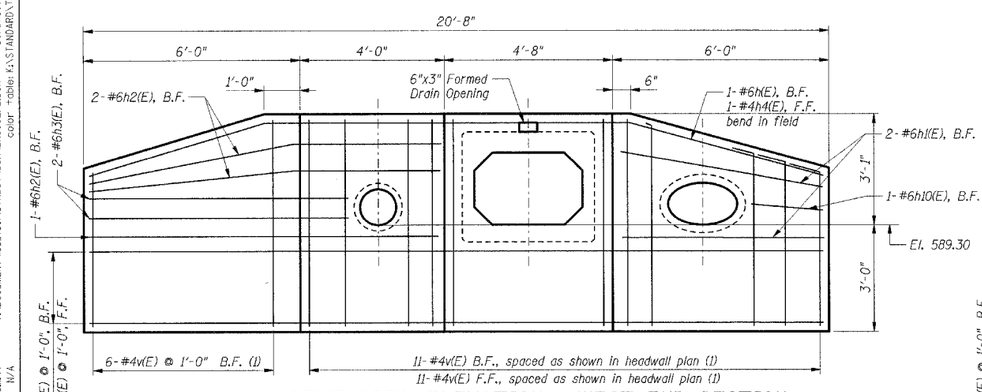

DEVELOPED ELEVATION - WEST END SECTION

(Along Back Face of Wall)

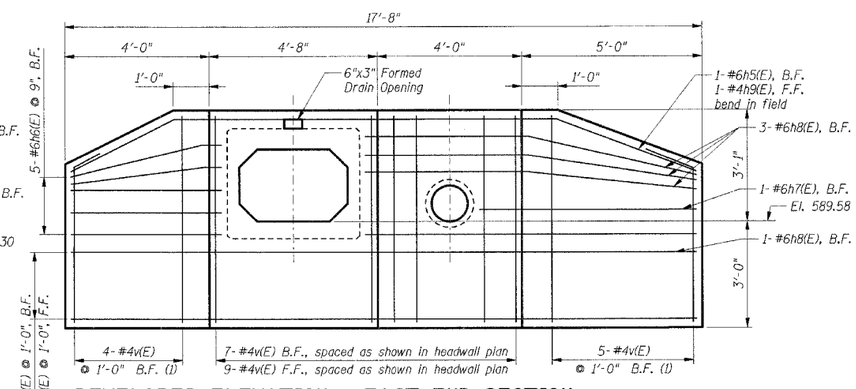

DEVELOPED ELEVATION - EAST END SECTION

(Along Back Face of Wall)

SHT. BCE-2 OF BCE-2

REVISIONS	
NAME	DATE

ILLINOIS DEPARTMENT OF TRANSPORTATION
F.A.P. ROUTE 338 (ILLINOIS ROUTE 59)
WEST FRONTAGE ROAD SINGLE BOX CULVERT
SECTION 26HB-1BR & 114R-1
STATION 5544+41.70, WILL COUNTY

W. FRONTAGE RD. & SEIL RD. BOX CULVERT DETAILS

DRAWN BY: MDB
DATE: 3/22/2007 CHECKED BY: VCP

TENG
TENG & ASSOCIATES, INC.
ENGINEERS·ARCHITECTS·PLANNERS
205 N. MICHIGAN AVE. CHICAGO, IL 60601
TELEPHONE 312/616-0000

...\ALT00264.DGN, ...\SUR00264.DGN, ...\GEO0088.DGN, ...\RDW0276P.DGN, ...\RDW0276P.DGN, ...\DRA00267.DGN, ...\UTL00268.DGN, ...\RDW0029.DGN, ...\DRA00266.DGN, ...\TTB0089H.DGN, ...\SUR00089.DGN
4-23-2007, Sht:44 TA\DOCUMENT\9322790\STRUCT\DGN\BXC002F2.DGN BOUDHUAD
pen tables: N/A color table: K:\STANDARD\TENG\DATA\COLORTABLE.TBL