CONTRACT NO. 62895

F.A.I. RTE.	SECTION	COUNTY	TOTAL SHEETS	SHEET NO.
55	99 (1&2) WRS	WILL	334	11
STA.		TO STA.		
FED. ROAD DIST. NO.	ILLINOIS	FED. AID PROJECT		

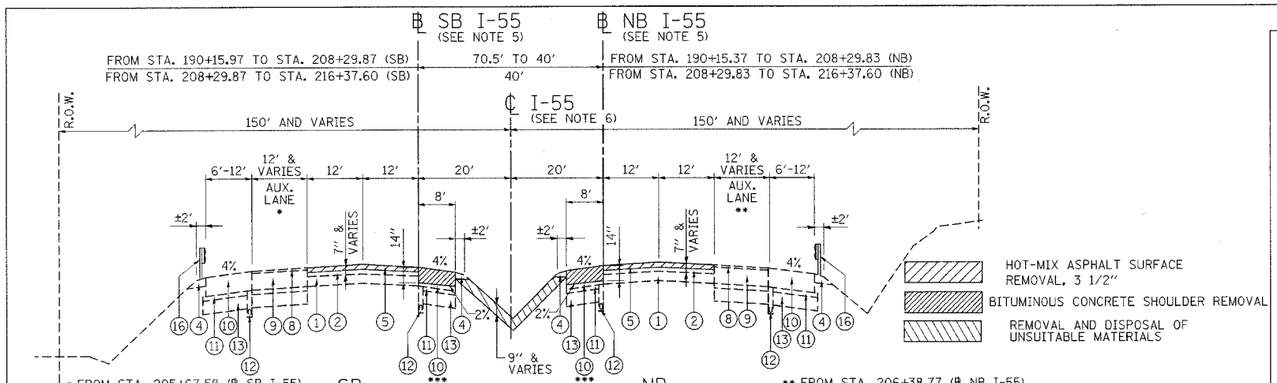

EXISTING ROADWAY TYPICAL SECTION

STA. 190+15.97 TO STA. 194+65.40 (SOUTHBOUND)
STA. 205+18.76 TO STA. 216+37.60 (SOUTHBOUND)
STA. 190+15.37 TO STA. 216+37.60 (NORTHBOUND)
STA. 216+37.60 TO STA. 240+90.04 (MAINLINE)

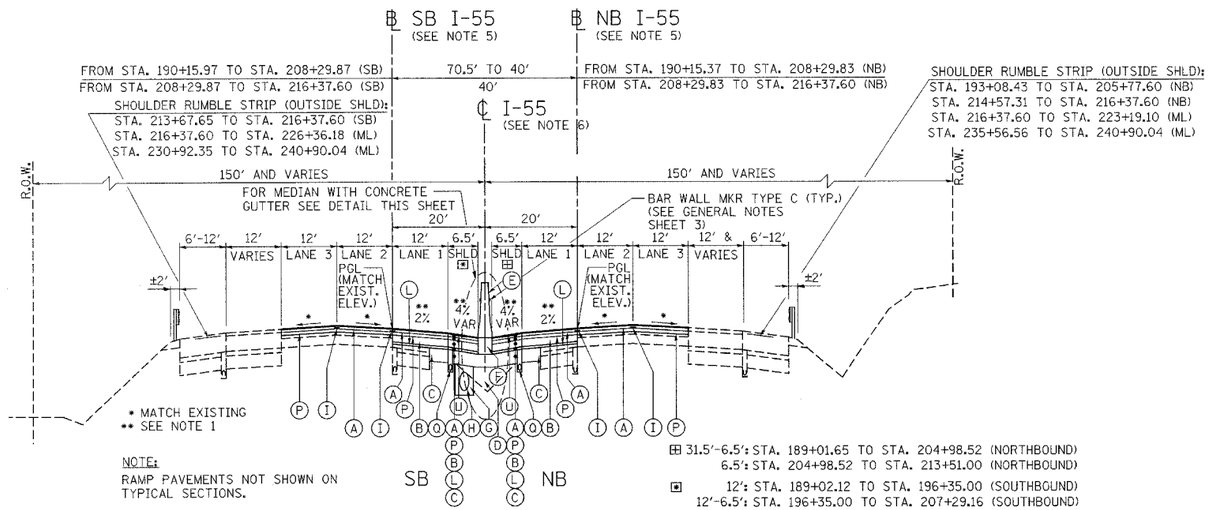

PROPOSED ROADWAY TYPICAL SECTION

STA. 190+15.97 TO STA. 194+65.40 (SOUTHBOUND)
STA. 205+18.76 TO STA. 216+37.60 (SOUTHBOUND)
STA. 190+15.37 TO STA. 216+37.60 (NORTHBOUND)
STA. 216+37.60 TO STA. 240+90.04 (MAINLINE)

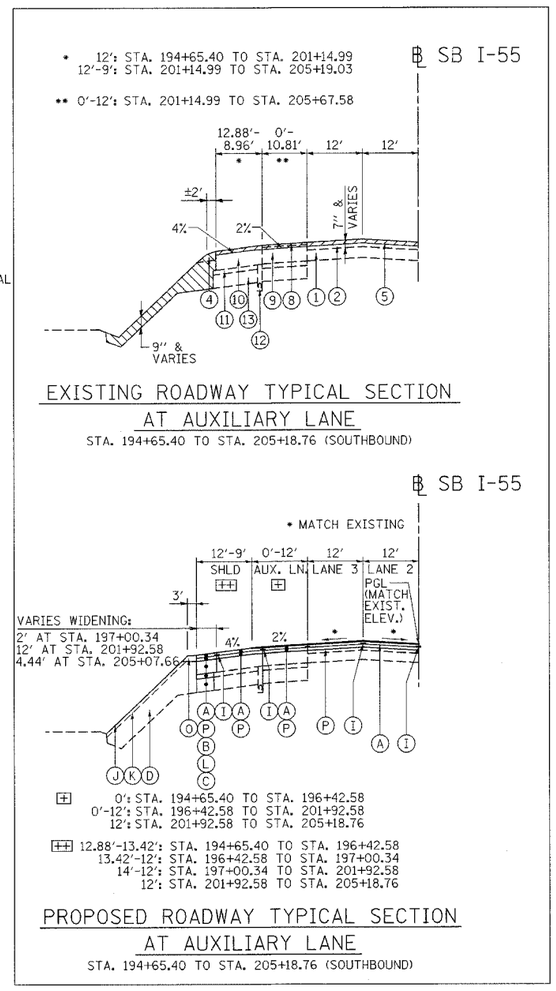

EXISTING ROADWAY TYPICAL SECTION AT AUXILIARY LANE

STA. 194+65.40 TO STA. 205+18.76 (SOUTHBOUND)

PROPOSED ROADWAY TYPICAL SECTION AT AUXILIARY LANE

STA. 194+65.40 TO STA. 205+18.76 (SOUTHBOUND)

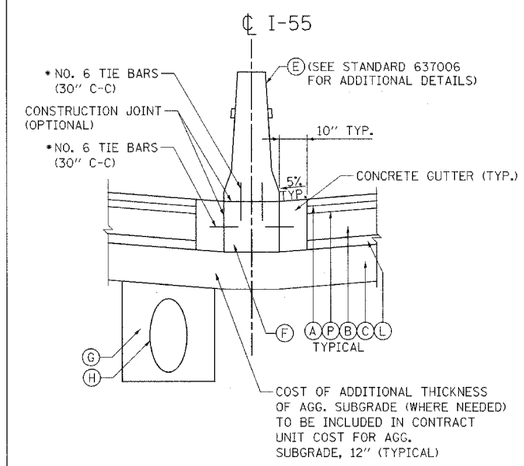

* TIE BARS ARE ONLY REQUIRED WITH OPTIONAL CONSTRUCTION JOINT. TIE BARS SHALL NOT BE PAID FOR SEPARATELY, BUT SHALL BE INCLUDED IN THE CONTRACT UNIT PRICE FOR BARRIER BASE.

MEDIAN DETAIL

MEDIAN BARRIER W/ CONCRETE GUTTER
CONCRETE GUTTER BEGINS AT STA. 213+81.02 (SOUTHBOUND)

NOTES

1. SEE PAVEMENT ELEVATION PLANS FOR LOCATIONS WHERE CROSS SLOPES OF THE NEW INSIDE LANE AND SHOULDER VARY FROM THE SLOPES SHOWN.
2. THE ℄ SB I-55 AND ℄ NB I-55 TERMINATE AT STA. 216+37.60.
3. A ℄ I-55 STARTS AT STA. 216+37.60.
4. POROUS GRANULAR EMBANKMENT, SUBGRADE AND GEOTECHNICAL FABRIC FOR GROUND STABILIZATION ARE TO BE CONSTRUCTED BENEAH THE AGGREGATE SUBGRADE WHERE COHESIVE SOILS WITH HIGH MOISTURE BONTENTS EXIST. THE TABLE BELOW DELINEATES THE LOCATIONS WHERE SUCH SOILS ARE ANTICIPATED. THE ACTUAL LOCATIONS SHALL BE DETERMINED BY THE ENGINEER. SEE GENERAL NOTES.

FROM STATION	TO STATION
194+50	TO 197+50
200+50	TO 203+50
221+50	TO 224+50
236+46	TO 239+62

5. IT IS ANTICIPATED THAT THE TOP SLAB OF SOME DRAINAGE STRUCTURES WILL EXTEND UP INTO THE PROPOSED BARRIER BASE AND SHOULDER PAVEMENT AS SHOWN ON SHEET 188.

EXISTING LEGEND

1. P.C.C. PAVEMENT, 10"
2. BITUMINOUS RESURFACING 7"
3. BITUMINOUS SHOULDER 10" (NOT USED)
4. AGGREGATE SHOULDER
5. HOT-MIX ASPHALT SURFACE REMOVAL, 3 1/2"
6. NOT USED
7. HOT-MIX ASPHALT SURFACE REMOVAL, VARIABLE DEPTH
8. POLYMERIZED BITUMINOUS CONCRETE SURFACE COURSE, SUPERPAVE, IL-19, N90 2"
9. BITUMINOUS CONCRETE BINDER COURSE, SUPERPAVE, IL-19, N90, 15"
10. BITUMINOUS SHOULDERS, SUPERPAVE, 17"
11. STABILIZED SUB-BASE 4"
12. PIPE UNDERDRAINS 6"
13. AGGREGATE SUBGRADE 12"
14. NOT USED
15. BITUMINOUS SHOULDER (NOT USED)
16. SPBGR (SEE PLANS FOR LOCATIONS)

PROPOSED LEGEND

- (A) POLYMERIZED HOT-MIX ASPHALT SURFACE COURSE, STONE MATRIX ASPHALT, N80; 1 3/4"
- (B) HOT-MIX ASPHALT BASE COURSE, 8"
- (C) AGGREGATE SUBGRADE, 12"
- (D) EMBANKMENT (SEE NOTE 4)
- (E) CONCRETE BARRIER, DOUBLE FACE, 42" HEIGHT
- (F) BARRIER BASE (SEE NOTE 5)
- (G) TRENCH BACKFILL
- (H) STORM SEWER
- (I) STRIP REFLECTIVE CRACK CONTROL TREATMENT
- (J) TOPSOIL FURNISH AND PLACE, 6" (NOT USED)
- (K) SEEDING, CLASS 2A (NOT USED)
- (L) HOT-MIX ASPHALT BASE COURSE, 2 1/2"
- (M) NOT USED
- (N) NOT USED
- (O) AGGREGATE SHOULDERS, TYPE B, 8"
- (P) POLYMERIZED HOT-MIX ASPHALT BINDER COURSE, STONE MATRIX ASPHALT, N80; 1 3/4"
- (Q) PIPE UNDERDRAINS 6" (SEE DRAINAGE PLANS FOR LOCATIONS)
- (R) NOT USED
- (S) HOT-MIX ASPHALT SURFACE COURSE, MIX "D", N 70; 1 3/4" (NOT USED)
- (T) AGGREGATE SHOULDERS, TYPE B (SPECIAL) (NOT USED)
- (U) SHOULDER RUMBLE STRIP

REVISIONS	
NAME	DATE

ILLINOIS DEPARTMENT OF TRANSPORTATION
FAI ROUTE 55 (I-80 TO BLACK ROAD)
WIDENING AND RESURFACING

TYPICAL SECTIONS
STA. 190+15.97 TO STA. 240+90.04 SB
STA. 190+15.37 TO STA. 240+90.04 NB

SCALE: N.T.S. DRAWN BY AG/GF
DATE 03/22/07 CHECKED BY DDH

TENG
TENG & ASSOCIATES, INC.
ENGINEERS/ARCHITECTS/PLANNERS
CHICAGO, ILLINOIS

PLOT DATE = $DATE$
FILE NAME = $FILEL$
PLOT SCALE = $SCALE$
USER NAME = $USER$

-\DDPW01\DGN\-\T5961A001.DGN,-\T5961A005.SHT,-\T5961A006.SHT,-\T5961A023.SHT,-\T5961A024.SHT
2-22-2007:13:13:06 GHRC1642 S:\DOCUMENT\62895\CIVIL\DGN\T5961A004.SHT