CONTRACT NO. 62895

F.A.I. RTE.	SECTION	COUNTY	TOTAL SHEETS	SHEET NO.
55	99 (1&2) WRS	WILL	334	188
STA.		TO STA.		
FED. ROAD DIST. NO.	ILLINOIS	FED. AID PROJECT		

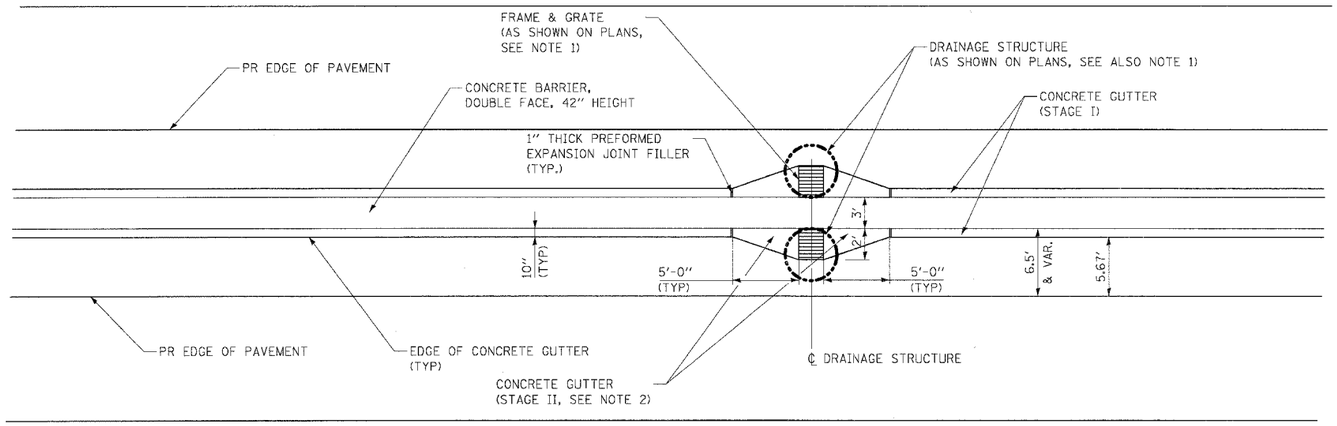

CONCRETE GUTTER DETAIL AT DRAINAGE STRUCTURE

NOTES

1. SEE DRAINAGE GENERAL NOTES REGARDING ADJUSTMENT OF FRAMES AND GRATES.
2. SEE ROADWAY GENERAL NOTES FOR DETAILS REGARDING THE STAGING AND THE PAYMENT OF THE VARIABLE WIDTH CONCRETE GUTTER ADJACENT TO THE DRAINAGE STRUCTURES.

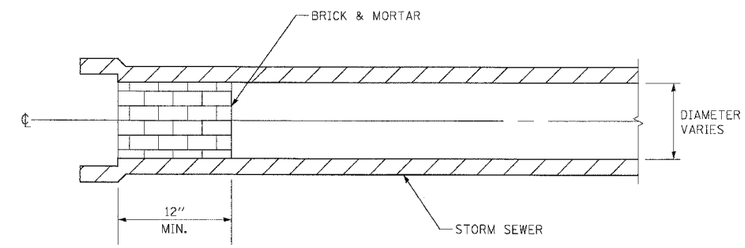

CULVERT AND STORM SEWER PLUGS

NOTES

1. THE COST OF SOLID CONCRETE BLOCK OR CONCRETE ADJUSTING RINGS SHALL BE INCLUDED IN THE CONTRACT UNIT PRICE OF DRAINAGE STRUCTURES OF TYPE OR SIZE SPECIFIED.
2. SEE STATE AND DISTRICT 1 STANDARDS FOR DRAINAGE STRUCTURE DETAILS.
3. FOR STRUCTURE AND PIPE INFORMATION SEE DRAINAGE SCHEDULES, SHEETS 169 TO 175.

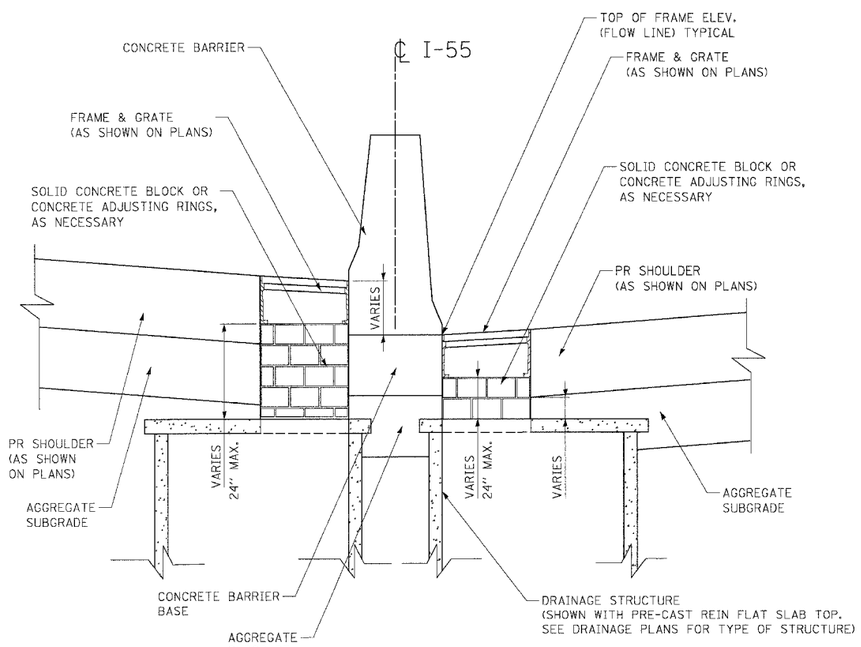

SIDE ELEVATION

TOP OF STRUCTURE BENEATH OR AT BOTTOM OF BARRIER BASE AND SHOULDER

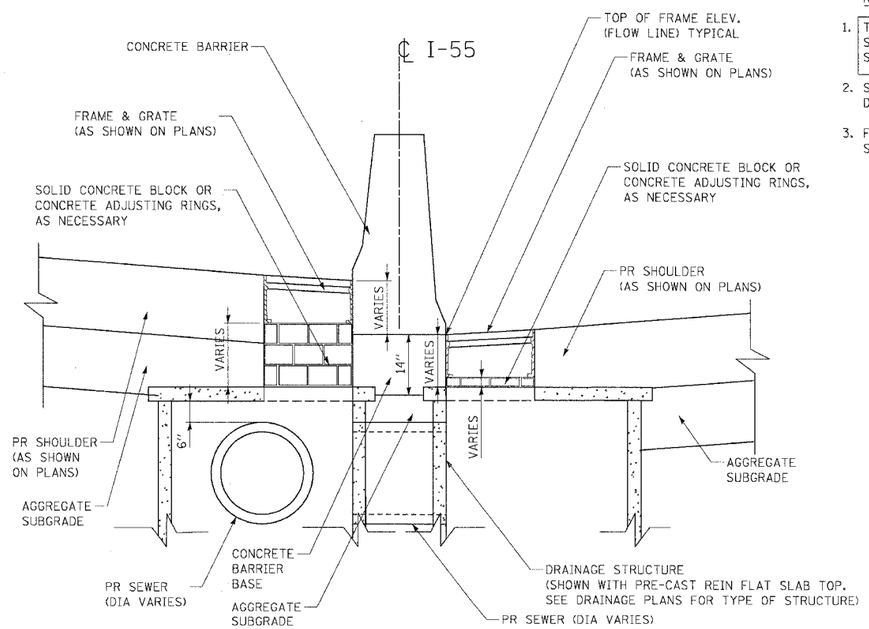

SIDE ELEVATION

TOP OF STRUCTURE EXTENDS INTO BARRIER BASE AND SHOULDER

CONCRETE ADJUSTING RINGS OR CONCRETE BLOCKS FOR TYPE 20 AND TYPE 21 F & G

REVISIONS	
NAME	DATE

ILLINOIS DEPARTMENT OF TRANSPORTATION
FAI ROUTE 55 (I-80 TO BLACK ROAD)
WIDENING AND RESURFACING

DRAINAGE DETAILS - IV
CONC GUTTER @ DRAINAGE STRUCTURE AND STRUCTURE ADJUSTMENT

SCALE: NTS — DRAWN BY MRK
DATE 03/15/07 — CHECKED BY TL

TENG — TENG & ASSOCIATES, INC. ENGINEERS/ARCHITECTS/PLANNERS CHICAGO, ILLINOIS

PLOT DATE = $DATE$
FILE NAME = $FILEL$
PLOT SCALE = $SCALE$
USER NAME = $USER$

..\DP9814A201.DGN, ..\TS9814A203.SHT, ..\PL9814A201.DGN, ..\VL9914A201.DGN, ..\DU9814A201.DGN, ..\DD9814A203.SHT, ..\DP9814A201.DGN, ..\DD9814A202.SHT
3 15 2007 10:39:36 GARCIA62 S:\DOCUMENT\62895\CIVIL\DGN\DD9814A202.SHT