CONTRACT NO. 64D04

F.A. RTE.	SECTION	COUNTY	TOTAL SHEETS	SHEET NO.
*	**	***	9	7
STA.		TO STA.		
FED. ROAD DIST. NO.	ILLINOIS	FED. AID PROJECT		

* FAI Route 39 (I-39) & FAP Route 754 (IL 76)
** Section (201-2HB & 101-BR)M
*** Winnebago & Boone Counties

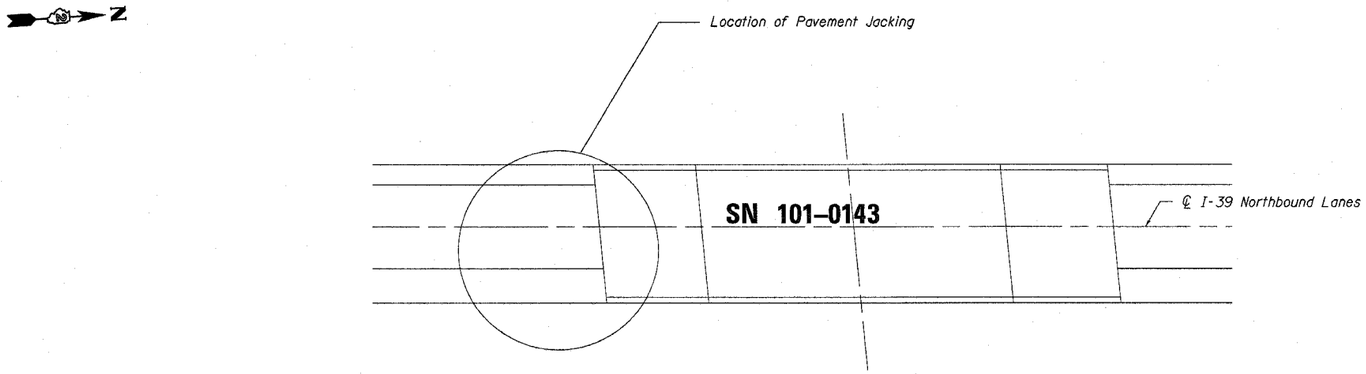

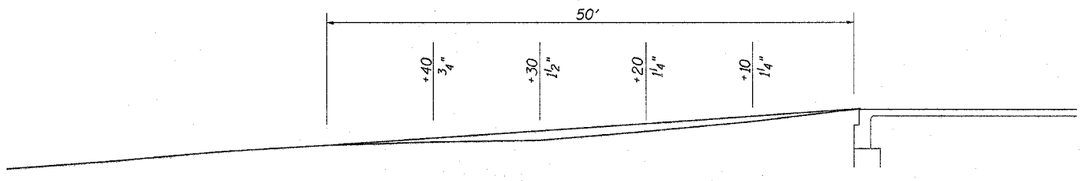

Centerline Pavement Profile

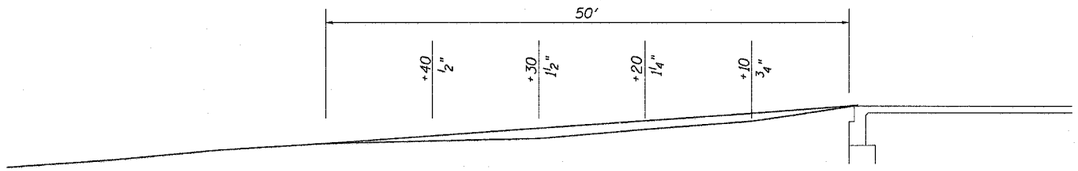

West Edge of Pavement Profile

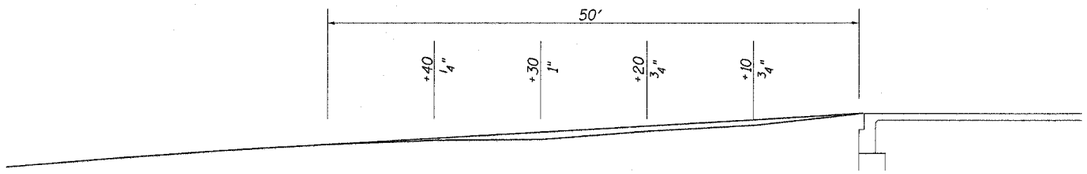

East Edge of Pavement Profile

PLOT DATE = Wed Jan 31 11:42:58 2007
FILE NAME = G:\br-\CADD plans\Various Counties\2006pavementraising.dgn
PLOT SCALE = 20.0000 ' / IN.
USER NAME = linkdj