CONTRACT NO. 66714

F.A.I. RTE.	SECTION	COUNTY	TOTAL SHEETS	SHEET NO.
55	53(6HB-1,6B)BP	LIVINGSTON	15	14
		ILLINOIS		

STATE OF ILLINOIS

~~DIVISION OF HIGHWAYS~~

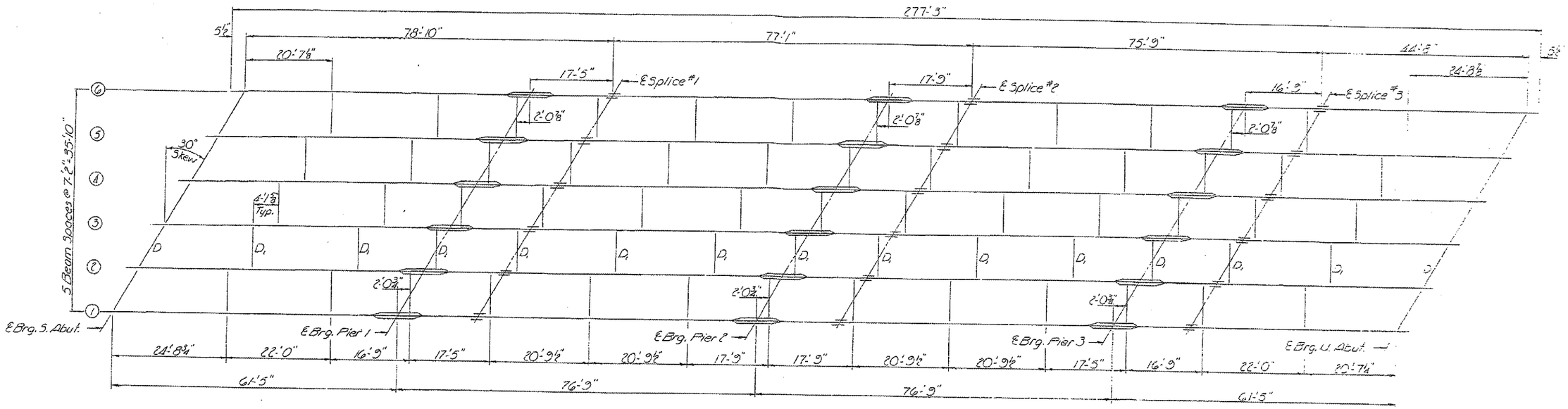

FRAMING PLAN

Typ. North and South Bd. Lanes
All Beams W36x160

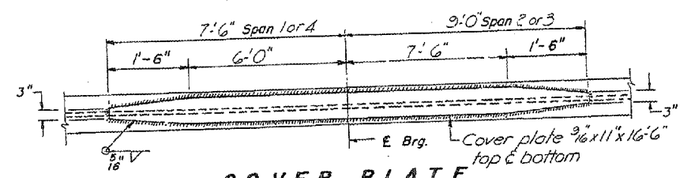

COVER PLATE
PIERS 1 & 3

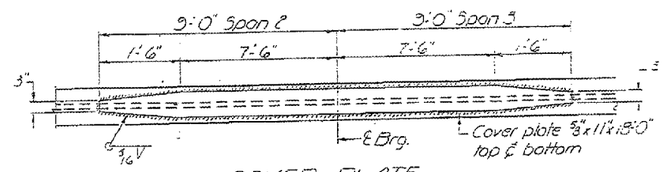

COVER PLATE
PIER 2

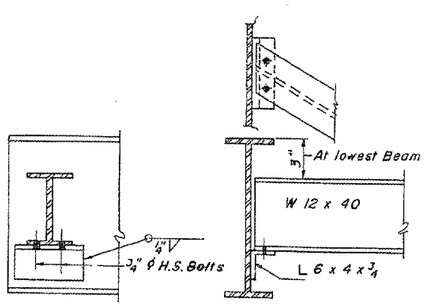

DIAPHRAGM D
20 Total Required

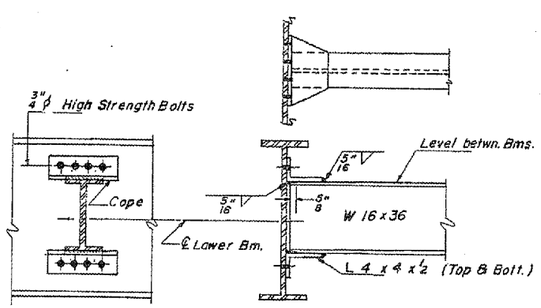

DIAPHRAGM D
130 Total Required

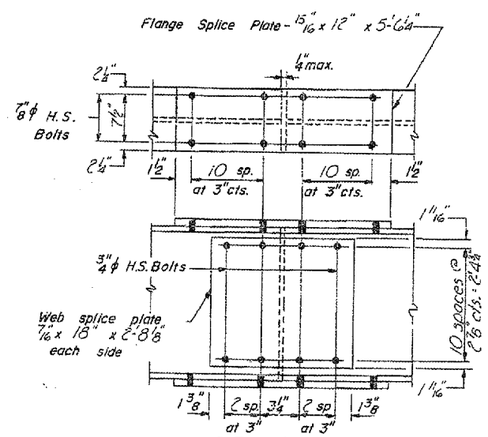

SPLICE

"FOR INFORMATION ONLY"

REVISIONS NAME	DATE

ILLINOIS DEPARTMENT OF TRANSPORTATION

EXISTING STRUCTURE DETAILS
BRIDGE LOCATION NO. 2 AND 3

FAI ROUTE 55 (I-55) SECTION 53(6HB-1,6B)BP
LIVINGSTON COUNTY
SN 053-0122, SN 053-0124 (SB), SN 053-0125 (NB)

Date: 03/12/2007
project:cs/bridgepdnt_07/053-0124 & 5.dgn