F.A.P. RTE.	SECTION	COUNTY	TOTAL SHEETS	SHEET NO.
365	01-00273-00-CH	KANE	172	128
STA.		TO STA.		
FED. ROAD DIST. NO.	ILLINOIS	FED. AID PROJECT		

CONTRACT NO. 83906

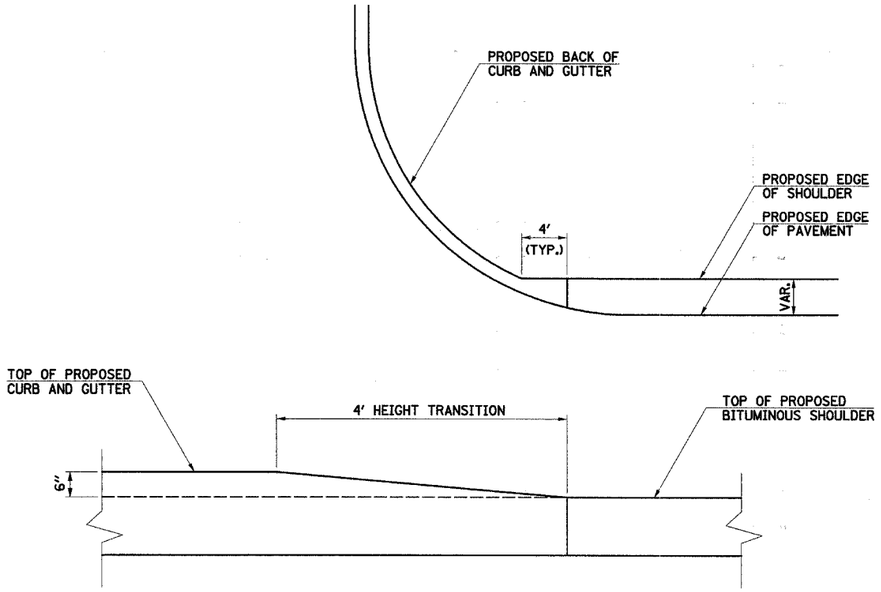

CURB AND GUTTER FLARE

NOTE:
THE CURB AND GUTTER FLARE WILL NOT BE PAID FOR SEPARATELY, BUT SHALL BE INCLUDED IN THE MEASURED QUANTITIES FOR THE TYPE OF CURB AND GUTTER BEING TRANSITIONED.

GENERAL NOTES

GRATING DETAILS SHOWN ARE INTENDED FOR USE WITH PARTICULAR SIZES OF PRECAST REINFORCED CONCRETE FLARED END SECTIONS AS SHOWN ON STANDARD 542306.

STRUCTURAL STEEL SHAPES AND PLATES SHALL BE ACCORDING TO THE REQUIREMENTS OF WITH ARTICLE 1006.04 OF THE STANDARD SPECIFICATIONS.

GALVANIZED STEEL PIPE SHALL BE ACCORDING TO THE REQUIREMENTS OF ARTICLE 1006.27(b) OF THE STANDARD SPECIFICATIONS. BOLTS, NUTS, AND WASHERS SHALL BE ACCORDING TO THE REQUIREMENTS OF ARTICLE 1006.27(f). ARTICLE 1006.08 OF THE STANDARD SPECIFICATION.

ALL FABRICATION SHALL BE COMPLETED AND READY FOR ASSEMBLY BEFORE GALVANIZING.

THE CORED HOLES IN THE PRECAST CONCRETE FLARED END SECTIONS SHALL BE TO THE DIAMETERS NOTED. IF CONE-OUT ON THE OTHER END OF THE HOLE OCCURS. THE HOLE SHALL BE FILLED WITH GROUT TO CORRECT DIAMETER OF THE HOLE.

APPROXIMATE WEIGHT OF STEEL SHOWN INCLUDES TOTAL WEIGHT OF GRATING, BOLTS, WASHERS, NUTS AND STEEL PIPE.

THE CONTRACT UNIT PRICE "EACH" FOR GRATING FOR CONCRETE FLARED END SECTION, EQUIVALENT ROUND-SIZE OF THE SIZE INDICATED SHALL INCLUDE FABRICATION AND INSTALLATION OF THE GRATING AS DETAILED HEREON, INCLUDING FABRICATION OF THE NECESSARY MOUNTING HOLES IN THE FLARED END SECTION. THIS PRICE DOES NOT INCLUDE THE COST OF THE PRECAST CONCRETE FLARED END SECTION.

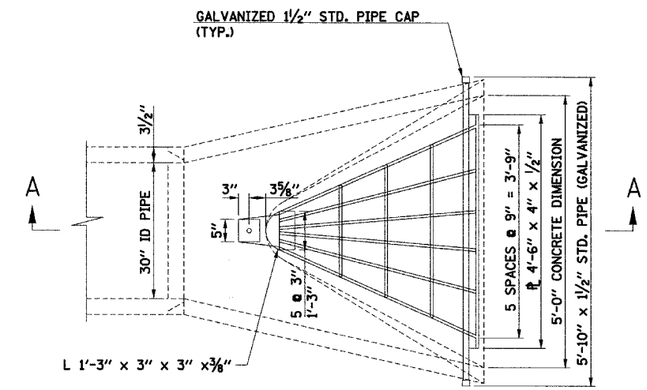

PLAN

APPROX. WEIGHT OF STEEL x 210 LBS

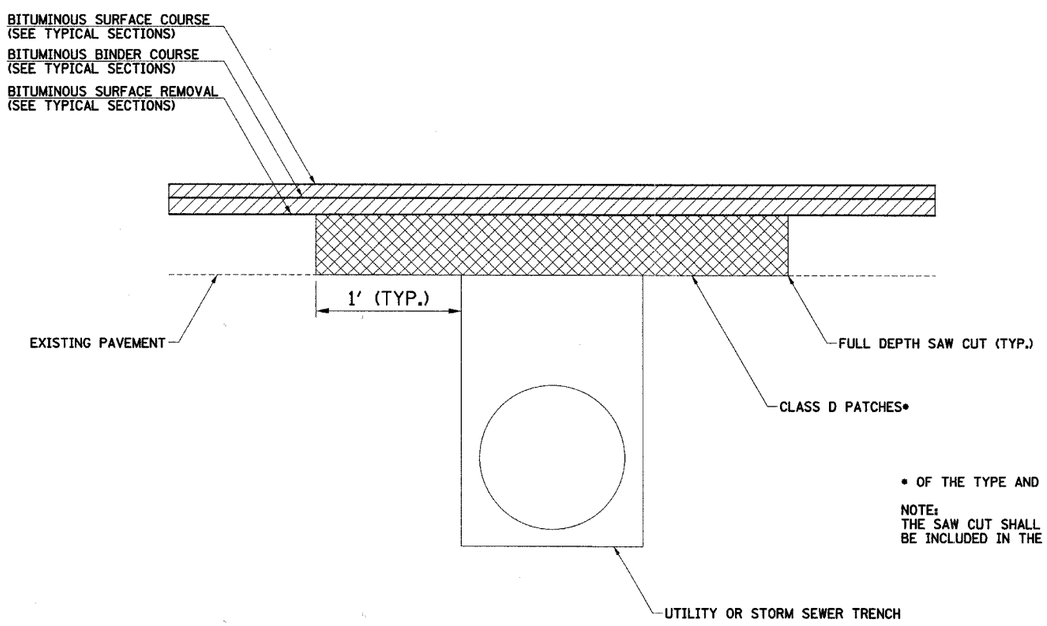

• OF THE TYPE AND THICKNESS SPECIFIED.

NOTE:
THE SAW CUT SHALL NOT BE PAID FOR SEPARATELY, BUT SHALL BE INCLUDED IN THE COST OF THE PAVEMENT PATCHING.

PAVEMENT PATCHING

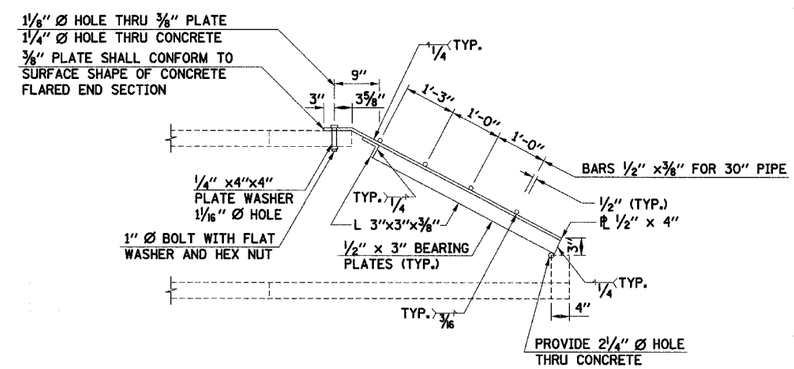

SECTION A-A

GRATING FOR ELLIPTICAL FLARED END SECTION 30"

ILLINOIS DEPARTMENT OF TRANSPORTATION
ILLINOIS ROUTE 56 AT KIRK / FARNSWORTH

MISCELLANEOUS DETAILS

SCALE: VERT. HORIZ.
DATE APR 06 2007
DRAWN BY BAH
CHECKED BY APS

PLAN
NOTE BOOK NO. ____
SURVEYED
PLOTTED
ALIGNMENT CHECKED
RT. OF WAY CHECKED
CADD FILE NAME
BY
DATE

PROFILE
NOTE BOOK NO. ____
SURVEYED
PLOTTED
GRADES CHECKED
B.M. NOTED
STRUCTURE NOTATIONS CHKD
BY
DATE

31*1/05/2007 11:40:00 AM D:\DOCUMENTS\DESIGN\ILLINOIS\ILLINOIS ROUTE 56\MISCDETAILS.DGN