F.A.P. RTE.	SECTION	COUNTY	TOTAL SHEETS	SHEET NO.
365	01-00273-00-CH	KANE	172	132
STA.		TO STA.		
FED. ROAD DIST. NO.	ILLINOIS	FED. AID PROJECT		

CONTRACT NO. 83906

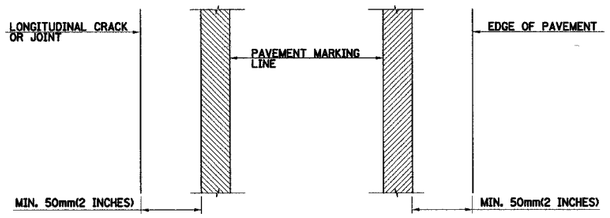

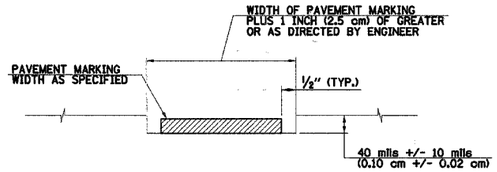

GROOVE INSTALLATION = 15 mil POLYUREA THICKNESS

• FOR 20 mil APPLICATION USE 45 mils +/- 10 mils

GENERAL NOTES

1. UNLESS OTHERWISE ALLOWED BY THE ENGINEER, WAIT 10 DAYS OR LONGER TO GRIND A GROOVE INTO NEW ASPHALT PAVEMENT TO AVOID DAMAGE TO THE NEW PAVEMENT BY THE GROOVING AND CLEANING OPERATION.
2. PAVEMENT MARKINGS SHALL CONFORM WITH IDOT HIGHWAY STANDARD 780001-01 (OR LATEST) UNLESS OTHERWISE DIRECTED BY THE ENGINEER OR THE DETAILS ON THIS SHEET.

RECESSED PAVEMENT MARKING APPLICATION

STANDARD KC780001-03

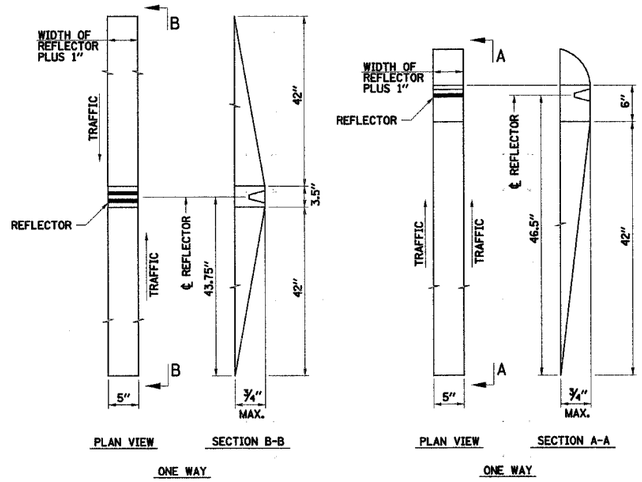

RECESSED REFLECTIVE PAVEMENT MARKERS

GENERAL NOTES

1. INSTALLATION SHALL CONFORM TO IDOT HIGHWAY STANDARD 781001-02 (OR LATEST) FOR MARKER PLACEMENT.
2. IDOT STANDARD 781001-02 SHALL BE MODIFIED TO REFLECT RECESSED PAVEMENT MARKERS INSTEAD OF RAISED PAVEMENT MARKERS.

INSTALLATION NOTES

1. SAW CUT TO DIMENSIONS SHOWN.
2. SAWCUT AREAS TO BE DRY AND FREE OF MATERIAL THAT ADVERSELY AFFECTS THE ADHESIVE BOND.
3. INSTALL THE REFLECTOR WITH AN APPROVED TWO-COMPONENT EPOXY ADHESIVE. EPOXY SHOULD NOT OBSCURE OR BLOCK THE LENS.
4. INSTALL TOP OF REFLECTOR +/- 3/8 INCH BELOW THE PAVEMENT SURFACE.
5. REFLECTOR SHALL BE 3M SERIES 190 OR APPROVED EQUIVALENT.

TYPICAL RECESSED REFLECTIVE PAVEMENT MARKERS

	D	T (min.)
Precast Reinforced Concrete Section	1.2 m (4'-0")	100 (4)
	1.5 m (5'-0")	125 (5)

NOTE:
VALVE VAULT DIA. SHALL BE 48" FOR VALVES 8" OR SMALLER, AND 60" FOR VALVES 12" OR LARGER AND SHALL BE PRECAST CONCRETE SECTIONS.

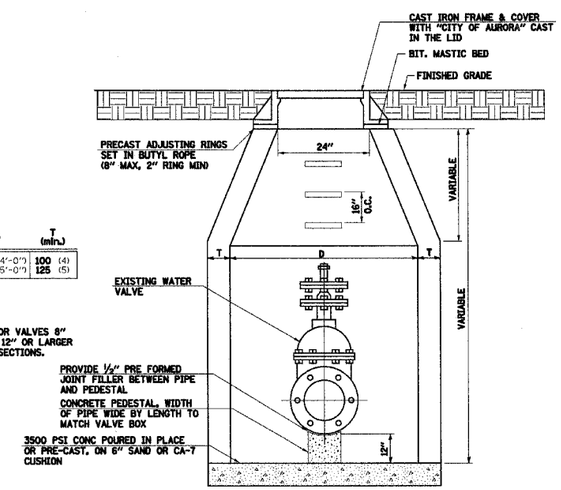

VALVE VAULT

ILLINOIS DEPARTMENT OF TRANSPORTATION

ILLINOIS ROUTE 56 AT KIRK / FARNSWORTH

MISCELLANEOUS DETAILS

SCALE: VERT. HORIZ.

DATE APR 06 2007

DRAWN BY BAH

CHECKED BY APS

PLAN		BY	DATE
	SURVEYED		
	PLOTTED		
	RT. OF WAY CHECKED		
NOTE BOOK	CADD FILE NAME		
NO.			

PROFILE		BY	DATE
	SURVEYED		
	PLOTTED		
	GRADES CHECKED		
	B.M. NOTED		
NOTE BOOK	STRUCTURE NOTAT'NS CH'KD		
NO.			

y:\projects\IH\R2001\401031_Aic_rt56\Roadway\ill_chw\521_det12.dgn
4/7/2007