ROUTE NO.	SECTION	COUNTY	TOTAL SHEETS	SHEET NO.
C.H. 15	96-00044 -00-BR	KENDALL	55	49
FED. ROAD DIST. NO.		ILLINOIS	FED. AID PROJECT-	

CONTRACT NO. 87325

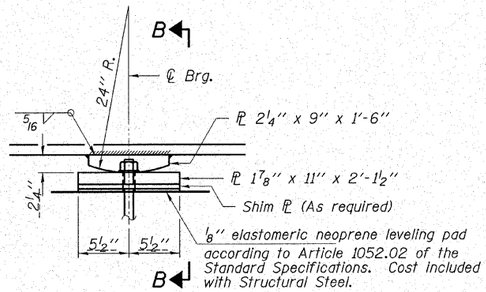

ELEVATION AT PIER

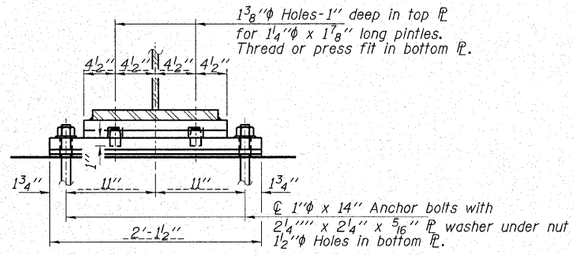

SECTION B-B

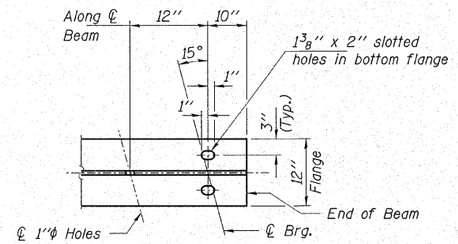

END OF BEAM DETAILS

BEARING AT PIER

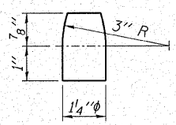

PINTLE

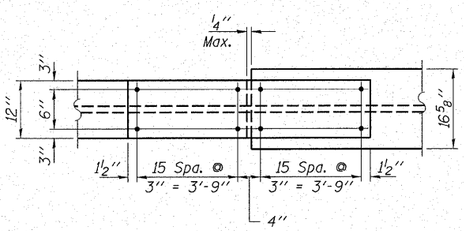

SECTION C-C
(Typ. Top & Bottom Flange)

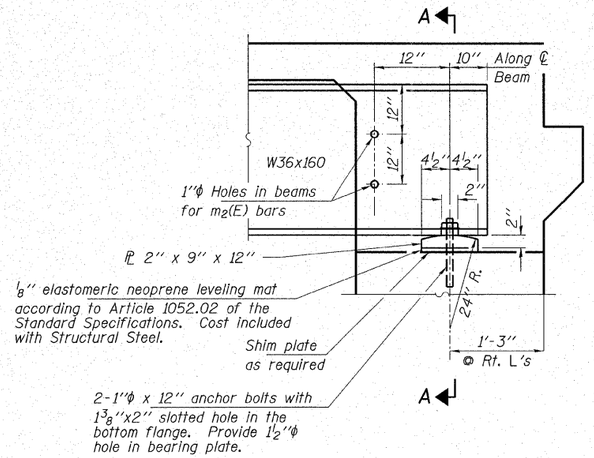

ELEVATION AT ABUTMENT

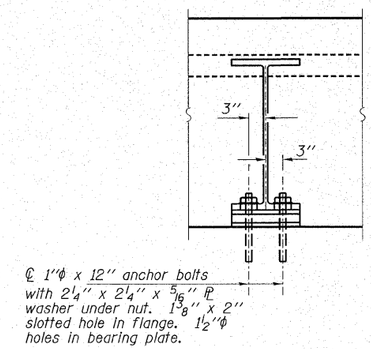

SECTION A-A

INTERIOR BEAM MOMENT TABLE		0.4 Sp. 1 & 0.6 Sp. 2	Pier 1
Is	(in⁴)	9750	18900
Ic (n)	(in⁴)	23330	
Ic (3n)	(in⁴)	16997	
Ss	(in³)	542	1030
Sc (n)	(in³)	760	
Sc (3n)	(in³)	684	
Z	(in³)		1170
wD	(k/ft.)	.832	1.415
MwD	('k)	502.9	1821.5
swD	(k/ft.)	.442	
MswD	('k)	331.7	
MwL	('k)	686.4	584.2
M (Imp)	('k)	194.7	165.8
5/3[MwL+M(Imp)]	('k)	1468.5	1250.0
Ma	('k)	2994.0	3993.0
* Mu	('k)	4096.6	4270.2
fswD non-comp	(k.s.i.)	11.1	21.2
fswD (comp)	(k.s.i.)	5.8	
fs5/3(L+Imp)	(k.s.i.)	23.2	14.6
fs (Overload)	(k.s.i.)	40.1	35.8
** fs (Total)	(k.s.i.)		46.5
VR	(k)	48.6	

INTERIOR BEAM REACTION TABLE		Abuts.	Pier
RwD+RswD	(K)	46.5	165.1
RwL	(K)	36.3	60.0
R Imp.	(K)	8.0	13.3
R (Total)	(K)	90.8	238.4

* Compact section
** Braced non-compact and partially braced section

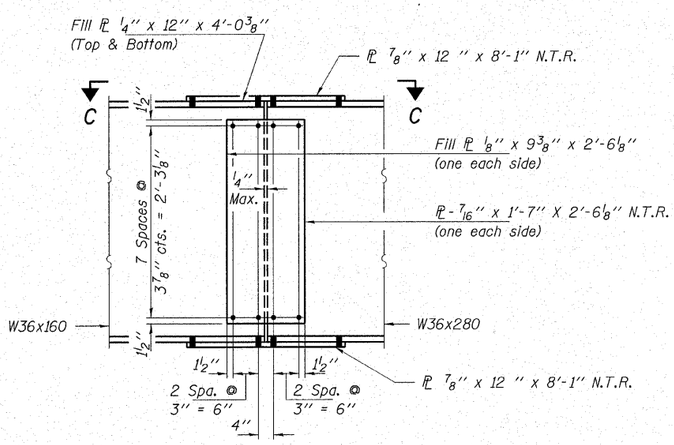

SPLICE 1 & 2
⅞"φ H.S. Bolts (Typ.)
All splice plates are NTR

BEARING AT ABUTMENT
(14 Required)

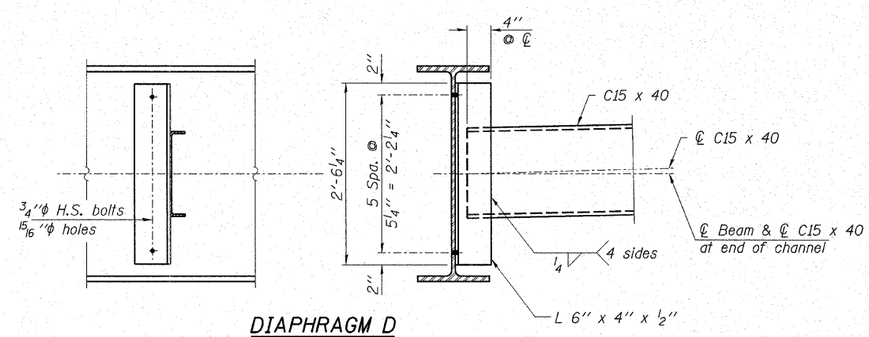

DIAPHRAGM D
54 Required

Notes:
Two hardened washers required for each set of oversized holes.

* Alternate channels are permitted to facilitate material acquisition. Calculated weight of structural steel is based on the lighter section.

All cross frames or diaphragms shall be installed as steel is erected and secured with erection pins and bolts except as otherwise noted. Individual cross frames or diaphragms at supports may be temporarily disconnected to install bearing anchor rods.

I_s, S_s: Non-composite moment of inertia and section modulus of the steel section used for computing f_s (Total and Overload) due to non-composite dead loads (in.⁴ and in.³).
$I_c(n)$, $S_c(n)$: Composite moment of inertia and section modulus of the steel and deck based upon the modular ratio, "n", used for computing f_s (Total and Overload) due to short-term composite live loads (in.⁴ and in.³).
$I_c(3n)$, $S_c(3n)$: Composite moment of inertia and section modulus of the steel and deck based upon 3 times the modular ratio, "3n", used for computing f_s (Total and Overload) due to long-term composite (superimposed) dead loads (in.⁴ and in.³).
wD: Un-factored non-composite dead load (kips/ft.).
MwD: Un-factored moment due to non-composite dead load (kip-ft.).
swD: Un-factored long-term composite (superimposed) dead load (kips/ft.)
$MswD$: Un-factored moment due to long-term composite (superimposed) dead load (kip-ft.).
MwL: Un-factored live load moment (kip-ft.).
M_{Imp}: Un-factored moment due to impact (kip-ft.).
M_a: Factored design moment (kip-ft.).
$1.3\ [\ MwD + M_{s}wD + \frac{5}{3}(MwL + M_{Imp})]$
M_u: Compact composite moment capacity according to AASHTO LFD 10.50.1.1 or compact non-compact composite moment capacity according to AASHTO LFD 10.48.1 (kip-ft.).
f_s (Overload): Sum of stresses as computed from the moments below (ksi).
$MwD + M_{s}wD + \frac{5}{3}(MwL + M_{Imp})$
VR: Maximum wL + impact horizontal shear range within the composite portion of the span for stud shear connector design (kips).

HAMPTON, LENZINI & RENWICK, INC.
CIVIL & STRUCTURAL ENGINEERS
3085 STEVENSON DRIVE, SUITE 201
SPRINGFIELD, ILLINOIS 62703
(217) 546-3400
ELGIN • SPRINGFIELD

PROJECT NUMBER: 12-06-0030-i		DATE: 03/12/07
DESIGNED: S.W.M.	CHECKED: M.G.B.	DRAWN: D.B.

STRUCTURAL STEEL DETAILS

SECTION 96-00044-00-BR
FOX RIVER DRIVE / C.H. 15
KENDALL COUNTY
STRUCTURE NO. 047-3150 / STATION 49+62