CONTRACT NO. 95509

RTE.	SECTION	COUNTY	TOTAL SHEETS	SHEET NO.
T.R. 140	*	SHELBY	10	6
PROJECT BROS-173(150)				

* 05-09119-00-BR

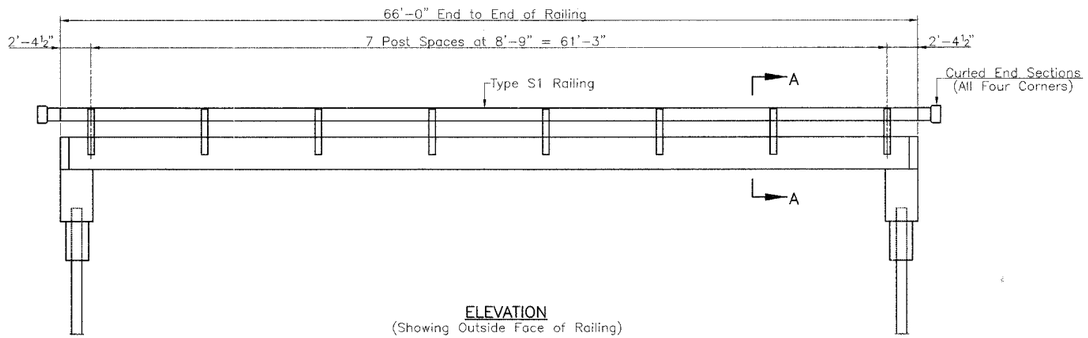

ELEVATION
(Showing Outside Face of Railing)

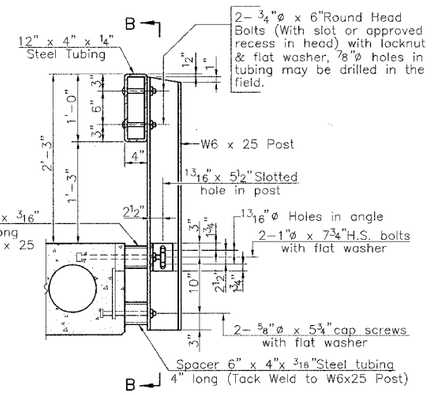

SECTION A-A

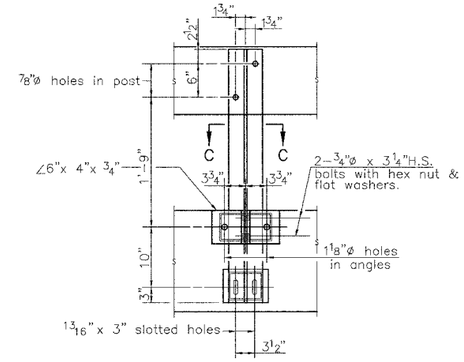

SECTION B-B

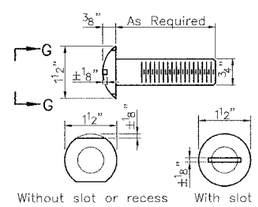

VIEW G-G
ROUND HEAD BOLT

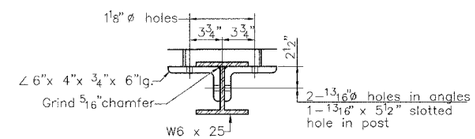

SECTION C-C

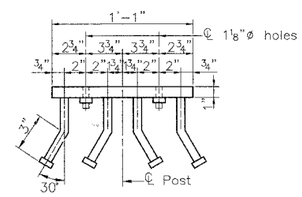

SECTION D-D

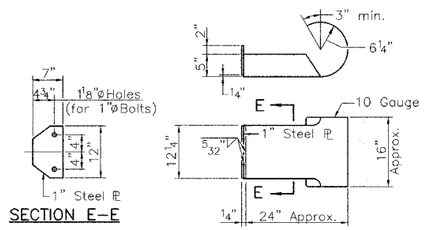

SECTION E-E

CURLED END SECTION DETAILS (4 Required)

NOTES

Hollow structural steel tubing shall conform to the requirements of A.S.T.M. A-500 Grade B Structural Steel Tubing and shall meet the longitudinal CVN requirements of 15 ft-lbs at 0° F.

All other steel shapes and plates shall conform to the requirements of A.A.S.H.T.O. M-270 Grade 36 except posts and angles shall conform to A.A.S.H.T.O. M-270, Grade 50.

Bolts, cap screws, and nuts shall conform to the requirement of A.S.T.M. designation A-307 except for high strength bolts, nuts, and washers noted which shall conform to A.A.S.H.T.O. M-164.

All posts, railing, rail splices, anchor devices, angles and tube spacers shall be galvanized after shop fabrication in accordance with A.A.S.H.T.O. M-111 and A.S.T.M. A-385. Galvanized rail shall not be painted.

All bolts, nuts, cap screws, washers and lock washers shall be galvanized in accordance with A.A.S.H.T.O. M-232.

Railing shall be in accordance with Section 509 of the Standard Specifications, except as noted, and will be paid for at the contract unit price per foot for Steel Railing, Type S1.

All field drilled holes shall be coated with an approved zinc rich paint before erection.

The lower portion of the spacer tube in contact with concrete shall receive two coats of asphalt paint conforming to Section 1060.07 Type II or place a ⅛" fabric bearing pad between the plate and concrete.

The ¾"ø high strength bolts used to connect the 6 x 4 x ¾ angles to the post shall be tightened in accordance with Article 505.04(f)(2) of the Standard Specifications. The 1"ø high strength bolts connecting the angles to the concrete shall be tightened to a snug fit and given an additional ⅛ turn. The ⅝"ø cap screws in bottom of posts shall be tightened to a snug fit only.

The cost of curled end sections shall be included in the contract unit price per foot for Steel Railing, Type S1.

** Whenever the lower insert assemblies interfere with strand locations, the #3 bars shall be cut and adjusted in order to allow raising or lowering of the lower inserts. Maximum adjustment not to exceed ½".

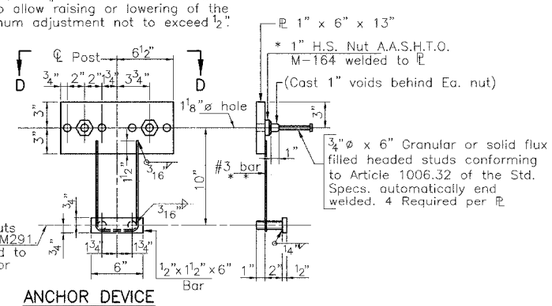

ANCHOR DEVICE

* Threaded areas shall be plugged or blocked off during casting of beam.

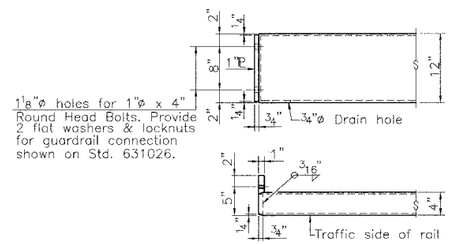

END OF RAIL DETAILS

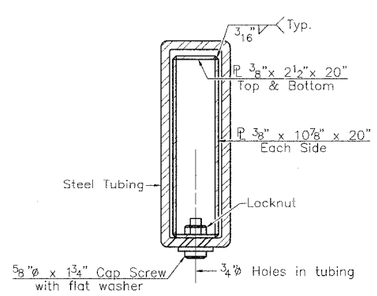

SECTION AT RAIL SPLICE

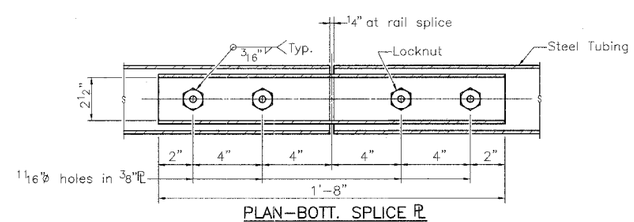

PLAN-BOTT. SPLICE ℙ
TYPICAL

BILL OF MATERIAL

Item		Total
Steel Railing, Type S1	Foot	132

RAILING
T.R. 140 OVER MITCHELL CREEK
SECTION 05-09119-00-BR
SHELBY COUNTY

FILE NAME: SC119 RL (REV. 3/20/07)