STATE OF ILLINOIS
DEPARTMENT OF TRANSPORTATION

ROUTE NO.	SECTION	COUNTY	TOTAL SHEETS	SHEET NO.
FAI 57	(X1-6-2)HBK	Williamson	272	155
FED. ROAD DIST. NO. 7	ILLINOIS	FED. AID PROJECT-		

SHEET NO. 20
33 SHEETS

Contract # 98994

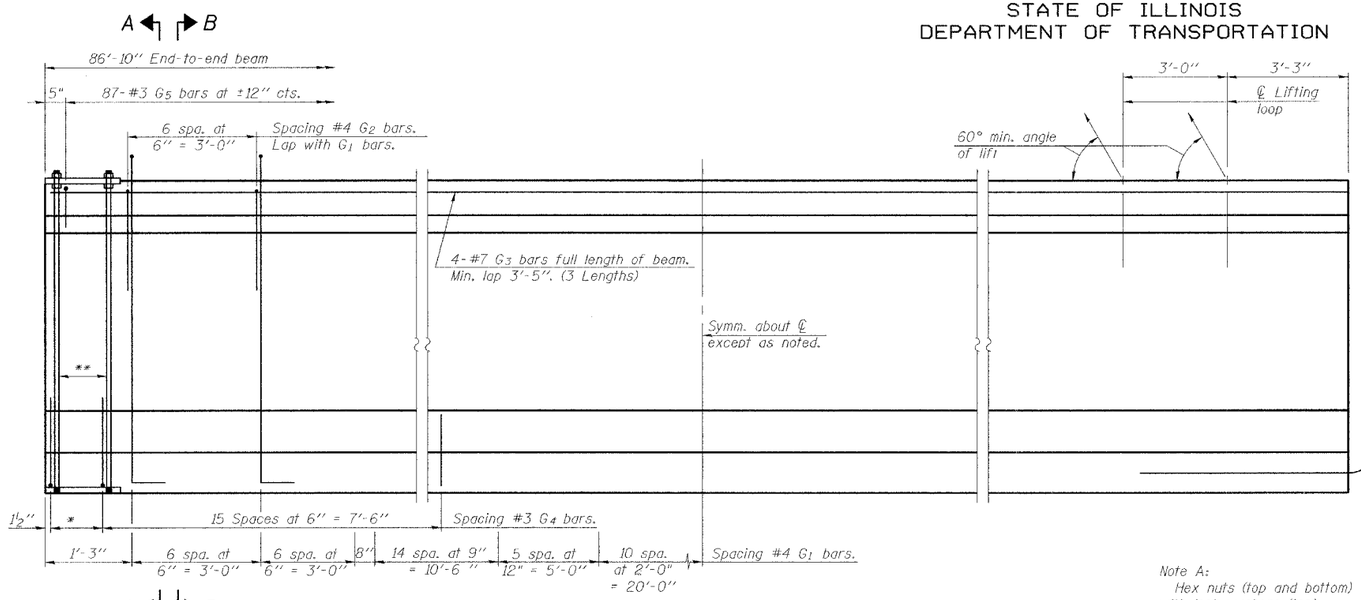

A B

* 3 spaces at 3" = 9".
** 4-¾" ϕ threaded dowel rods at 3" cts., each face.

ELEVATION OF BEAM
(Showing reinforcement & dimensions)

Note A:
Hex nuts (top and bottom) with lock washers (top). Only tighten sufficiently to compress lock washers.

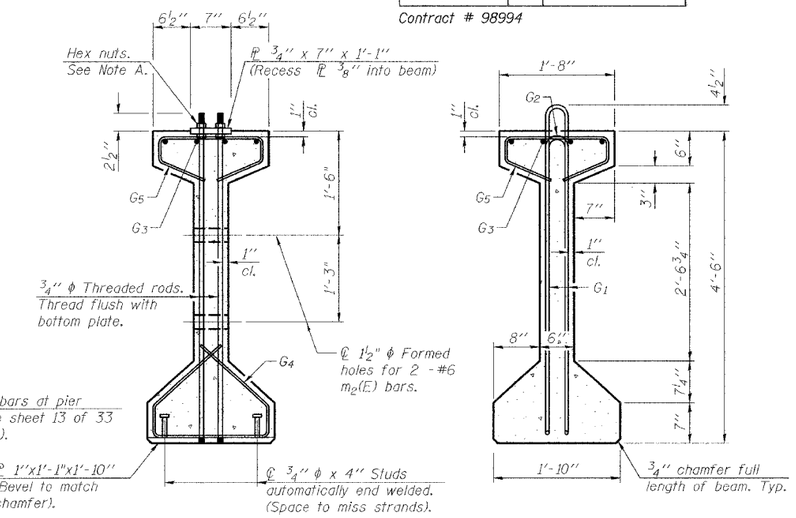

SECTION A-A
G_1 bars not shown for clarity

SECTION B-B

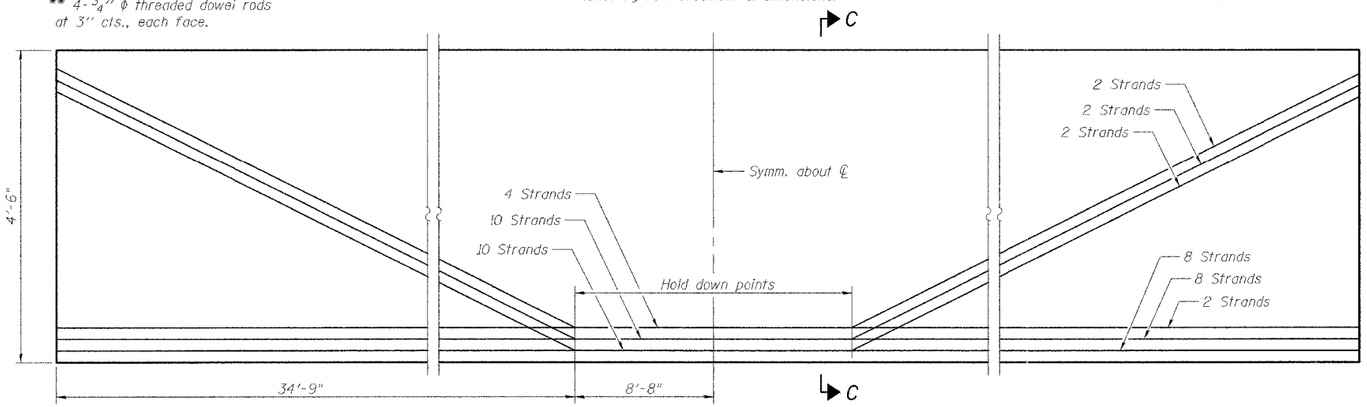

ELEVATION OF BEAM
(Showing prestressing steel)

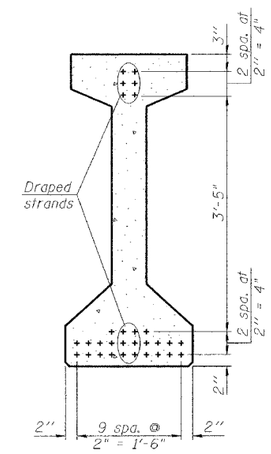

SECTION C-C

BAR LIST
ONE BEAM ONLY

Bar	No.	Size	Length	Shape
G_1	87	#4	10'-5"	
G_2	14	#4	5'-4"	
G_3	12	#7	31'-2"	
G_4	38	#3	4'-11"	
G_5	87	#3	3'-5"	
G_6	2	#8	3'-9"	

Notes:
See sheet 21 of 33 for additional details and Bill of Material.
Required release strength, f'ci, shall be 5000 psi.

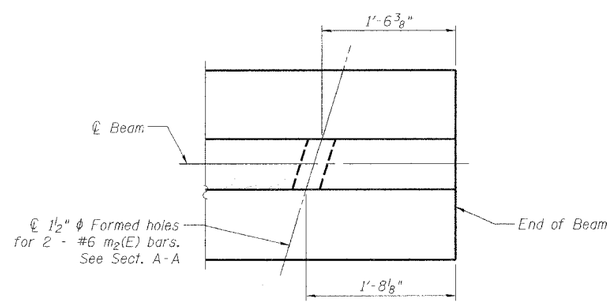

PLAN - EAST ABUTMENT

THOUVENOT, WADE & MOERCHEN, INC.

TWM

DESIGNED	ALN
CHECKED	BWP
DRAWN	KBF
CHECKED	ALN/BWP

54" PPC I-BEAM - SPAN 4
MORGAN AVE. OVER I-57
FAI ROUTE 57 - SECTION (X1-6-2)HBK
WILLIAMSON COUNTY
STATION 34+69.21
STRUCTURE NO. 100-0092

3/19/2007 P:\040600\dgn\Bridge\S20_040600_GRDR4.dgn