6-15-07 Letting, Item 123

| ROUTE NO. | SECTION | COUNTY | TOTAL SHEETS | SHEET NO. |
|---|---|---|---|---|
| FAU 9713 | 99-02118-00-FP | JACKSON | 122 | 1 |
| FED. ROAD DIST. NO. | | ILLINOIS | FED. AID PROJECT- | HPD-0241(1) |

CONTRACT NO. 99219

INDEX OF SHEETS


1. COVER SHEET
2. STANDARDS AND GENERAL NOTES
3. SUMMARY OF QUANTITIES
4.-10. SCHEDULE OF QUANTITIES
11. HORIZONTAL ALIGNMENT AND BENCH MARKS
12.-14. TYPICAL CROSS SECTIONS
15. MIXTURE REQUIREMENTS
16.-32. PLAN AND PROFILE SHEETS
33. STORM SEWER PROFILE SHEET
34. STREAM PLAN
35.-36. INTERSECTION DETAIL SHEETS
37.-38. ENTRANCE DETAILS
39. LIGHTING DETAILS
40. DITCH LINING DETAILS
41.-44. PAVEMENT MARKING SHEET
45.-49. EROSION CONTROL PLAN
50.-52. CULVERT PLAN AND DETAILS
53.-59. BRIDGE PLANS
60.-61. BORINGS
62. CROSS SECTIONS - ACROSS ROAD PIPES
63.-109. CROSS SECTION - EAST PLEASANT HILL
110.-112. CROSS SECTIONS - WARREN ROAD
113.-122. CROSS SECTIONS - GIANT CITY ROAD


# STATE OF ILLINOIS
# DEPARTMENT OF TRANSPORTATION
# DIVISION OF HIGHWAYS
# PLANS FOR PROPOSED
# SURFACE TRANSPORTATION PROGRAM – RURAL

SCALES
- PLAN 0' 20'
- PROFILE HORIZ. 0' 20'
- PROFILE VERT. 0' 5'
- CROSS SECTIONS 0' 5'

## SECTION 99-02118-00-FP
## F.A.U. 9713 – EAST PLEASANT HILL ROAD
## JACKSON COUNTY
## PROJECT ACM-HPD-0241(96)
## C-99-503-03

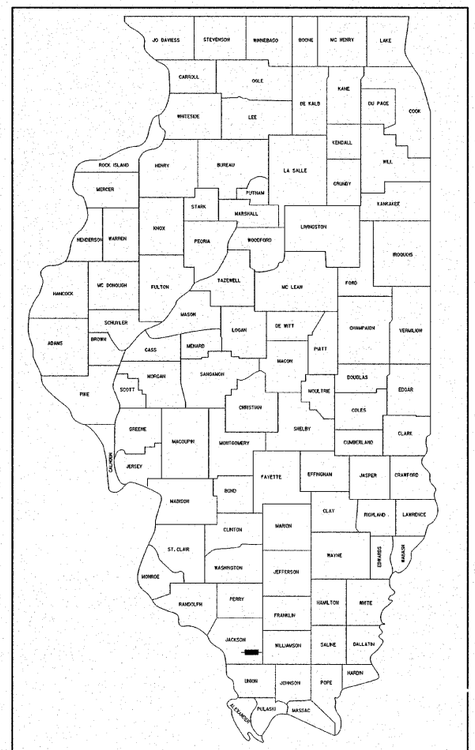


LOCATION OF SECTION INDICATED THUS: -

STA. 80+95 (SN 039-3254) - SPECIAL BRIDGE DESIGN
PRECAST PRESTRESSED CONCRETE DECK BEAM
BRIDGE. SINGLE SPAN @ 50'-0"
40'-6" RDWY. SKEW = 20° RT. AH.

R. 1 W, 3rd P.M.

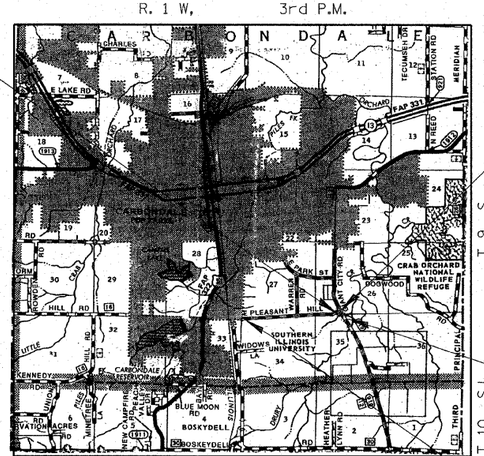


IMPROVEMENT ENDS
STA. 84+57.16

STA. 95+56.18 (SN 039-5001)
GIANT CITY RD.
DOUBLE 12'x8' BOX
CULVERT EXTENSION

IMPROVEMENT BEGINS
STA. 12+36.00

LAYOUT

0 1 MILE
APPPOXIMATE SCALE:

NET LENGTH OF SECTION = 7221.16 FEET = 1.368 MILES

## UTILITIES

AMERENCIPS - GAS
ATT. MR. RAY MIESNER
401 N. ILLINOIS AVE.
CARBONDALE, IL 62901

MEDIA COM
ATT. MR. TOM MCPHERSON
2250 N. ILLINOIS AVE.
CARBONDALE, IL 62901

SOUTH HIGHWAY WATER DISTRICT
111 CEDAR CREEK ROAD
MAKANDA, IL 62958

CITY OF CARBONDALE
200 S. ILLINOIS AVE.
CARBONDALE, IL 62901

VERIZON NORTH INC.
ATT. MR. TERRY PHILLIPS
208 W. UNION
MARION, IL 62959

AMEREN CIPS - ELEC
P.O. BOX 2168
CARBONDALE, IL 62902

EGYTIAN ELECTRICAL
10169 OLD HIGHWAY 13
MURPHYSBORO, IL 62966

DESIGN FUNCTIONAL CLASSIFICATION: MINOR URBAN ARTERIAL
DESIGN TRAFFIC: 6020 (2022) ADT 660 (2022) DHV
DESIGN SPEED: 30 M.P.H.

**WARNING**
CALL J.U.L.I.E. TOLL FREE
1-800-892-0123
**CALL BEFORE YOU DIG**

LICENSED STRUCTURAL ENGINEER
STEVEN W. MEGGINSON
081-6064
SPRINGFIELD, IL
STATE OF ILLINOIS

Expires 11-30-08

Steven W. Megginson 4/4/07
ILLINOIS STRUCTURAL NO. 6064

APPROVED April 9 20 07
TOWNSHIP COMMISSIONER

APPROVED April 9, 20 07
COUNTY ENGINEER

PASSED April 9 20 07
Dennis W. Hilbert
DISTRICT NINE ENGINEER OF LOCAL ROADS & STREETS
RELEASING FOR BID BASED ON LIMITED REVEIW April 9 20 07
DEPUTY DIRECTOR OF HIGHWAYS
REGION FIVE ENGINEER
STATE OF ILLINOIS
DEPARTMENT OF TRANSPORTATION

DATE: 4/4/2007
BY:
LICENSE EXPIRES: NOVEMBER 30, 2007

LICENSE NO. 34227
LICENSED PROFESSIONAL ENGINEER
LOUIS F. STAUDER
062-34227
STATE OF ILLINOIS
SEAL:


HAMPTON, LENZINI & RENWICK, INC.
CIVIL & STRUCTURAL ENGINEERS
HLR
3085 STEVENSON DRIVE, SUITE 201
SPRINGFIELD, ILLINOIS 62703
(217) 546-3400
ELGIN • SPRINGFIELD
Account Number
03-47-0001-1

| ROUTE NO. | SECTION | COUNTY | TOTAL SHEETS | SHEET NO. |
|---|---|---|---|---|
| FAU 9713 | 99-02118 -00-FP | JACKSON | 122 | 2 |
| FED. ROAD DIST. NO. | | ILLINOIS | FED. AID PROJECT- | |

**CONTRACT NO. 99219**

## STANDARDS

| | |
|---|---|
| 280001-03 | TEMPORARY EROSION CONTROL SYSTEMS |
| 406201 | MAILBOX TURNOUT |
| 515001-02 | NAME PLATE FOR BRIDGES |
| 542301-01 | PRECAST REINFORCED CONCRETE FLARED END SECTION |
| 542401 | METAL END SECTION FOR PIPE CULVERTS |
| 602301-01 | INLET, TYPE A |
| 602306-01 | INLET, TYPE B |
| 602401-01 | MANHOLE, TYPE A |
| 602601-01 | PRECAST REINFORCED CONCRETE FLAT SLAB TOP |
| 602701-01 | MANHOLE STEPS |
| 604001-02 | FRAME AND LIDS, TYPE 1 |
| 604011-02 | FRAME AND GRATE, TYPE 3V |
| 604036-01 | GRATE, TYPE 8 |
| 604091-01 | FRAME AND GRATE, TYPE 24 |
| 606001-03 | CONCRETE CURB TYPE B AND COMBINATION CONCRETE CURB AND GUTTER |
| 606301-03 | PC CONCRETE INSLANDS AND MEDIANS |
| 630301-04 | SHOULDER WIDENING FOR TYPE 1, (SPECIAL) GUARDRAIL TERMINALS |
| 635006-02 | REFLECTOR AND TERMINAL MARKER PLACEMENT |
| 635011-01 | REFLECTOR MARKER AND MOUNTING DETAILS |
| 701001-01 | OFF ROAD OPERATIONS, 2L, 2W, MORE THAN 4.5 m (15') AWAY |
| 701006-02 | OFF ROAD OPERATIONS, 2L, 2W, 4.5 m (15') TO 600mm (24") FROM EDGE OF PAVEMENT |
| 701306-01 | LANE CLOSURE, 2L, 2W, SLOW MOVING OPERATIONS DAY ONLY, FOR SPEEDS ≥ 45 MPH |
| 701326-02 | LANE CLOSURE, 2L, 2W, PAVEMENT WIDENING, FOR SPEEDS ≥ 45 MPH |
| 701501-03 | URBAN LANE CLOSURE, 2L, 2W, UNDIVIDED |
| 702001-06 | TRAFFIC CONTROL DEVICES |
| 720001 | SIGN PANEL MOUNTING DETAILS |
| 720006-01 | SIGN PANEL ERECTION DETAILS |
| 728001 | TELESCOPING STEEL SIGN SUPPORT |
| 729001 | APPLICATIONS OF TYPES A & B METAL POSTS (FOR SIGNS & MARKERS) |
| 780001-01 | TYPICAL PAVEMENT MARKINGS |
| 781001-02 | TYPICAL APPLICATIONS RAISED REFLECTIVE PAVEMETN MARKERS |
| 000001-04 | STANDARD SYMBOLS, ABBREVIATIONS, AND PATTERNS |
| BLR 21-6 | TYPICAL APPLICATION OF TRAFFIC CONTROL DEVICES FOR CONSTRUCTION ON RURAL LOCAL HIGHWAYS |
| BLR 22-4 | TYP. APPL. T.C.D. RURAL LOC. HGWY. (2-LANE 2 WAY RURAL TRAF.) (RD. CLOSED TO THRU TRAF.) |

## GENERAL NOTES

ALL WORK SHALL BE IN ACCORDANCE WITH THE "STANDARD SPECIFICATIONS FOR ROAD AND BRIDGE CONSTRUCTION" ADOPTED JANUARY 1, 2007 (HEREINAFTER REFERRED TO AS THE STANDARD SPECIFICATIONS); THE "SUPPLEMENTAL SPECIFICATIONS AND RECURRING SPECIAL PROVISIONS," ADOPTED JANUARY 1, 2007; THE LATEST EDITION OF THE "ILLINOIS MANUAL ON UNIFORM TRAFFIC CONTROL DEVICES FOR STREETS AND HIGHWAYS"; THE "DETAILS" IN THE PLANS AND THE "SPECIAL PROVISIONS" INCLUDED IN THE CONTRACT DOCUMENTS.

ANY REFERENCE TO STANDARDS THROUGHOUT THE PLANS OR SPECIAL PROVISIONS SHALL BE INTERPRETED AS THE LATEST STANDARD OF THE DEPARTMENT.

THE LOCATION OF GAS MAINS, ELECTRIC POWER LINES, TELEPHONE LINES AND THE OTHER UTILITIES AS SHOWN ON THE PLANS, ARE BASED ON CAREFUL FIELD INVESTIGATION AND THE BEST INFORMATION AVAILABLE , BUT THE LOCATIONS ARE NOT GUARANTEED. IT SHALL BE THE CONTRACTOR'S RESPONSIBILITY TO ASCERTAIN THE EXACT LOCATION FROM THE UTILITY COMPANIES AND BY FIELD INVESTIGATION.

WHERE SECTION OR SUBSECTION MONUMENTS ARE ENCOUNTERED, THE ENGINEER SHALL BE NOTIFIED BEFORE SUCH MONUMENTS ARE REMOVED. THE CONTRACTOR SHALL PROTECT AND CAREFULLY PRESERVE ALL PROPERTY MARKS AND MONUMENTS UNTIL THE OWNER, AN AUTHORIZED SURVEYOR OR AGENT HAS WITNESSED OR OTHERWISE REFERENCED THEIR LOCATION.

THE REVISION NUMBER INDICATED FOR THE STANDARDS SHOWN IN THE INDEX OF SHEETS SHALL BE USED IN THE CONSTRUCTION OF THIS SECTION.

THE EXISTING BITUMINOUS PAVEMENT SHALL BE SAWCUT AT ALL CULVERT REPLACEMENTS AND PAVEMENT PATCHING OR REPLACEMENTS. ALL SAWCUTS NECESSARY FOR REMOVAL OF BITUMINOUS PAVEMENTS SHALL BE INCLUDED IN THE COST OF PIPE CULVERT REMOVAL.

THE AREA TO BE SEEDED SHALL CONSIST OF ALL DISTURBED EARTH SURFACES WITHIN THE RIGHT-OF-WAY AS DIRECTED BY THE ENGINEER.
ESTIMATED QUANTITY = 8.04 ACRE

TREES WITHIN THE RIGHT OF WAY AND EASEMENTS THAT INTERFERE WITH CONSTRUCTION SHALL BE REMOVED ONLY AT THE DIRECTION OF THE ENGINEER.

BITUMINOUS PAVEMENT REMOVAL, BITUMINOUS DRIVEWAY REMOVAL, BITUMINOUS CONCRETE SHOULDER REMOVAL, AND CONCRETE DRIVEWAY PAVEMENT REMOVAL ARE TO BE CONSIDERED INCIDENTAL TO EARTH EXCAVATION.

RIFFLES ARE TO BE CONSIDERED AN INCIDENTIAL TO EARTH EXCAVATION

EXISTING METAL CROSS ROAD PIPES, ENTRANCE PIPES AND END SECTIONS SHOWN ON THE PLANS OR DIRECTED BY THE ENGINEER TO BE REMOVED ARE CONSIDED AS UNCLASSIFIED MATERIAL AND WILL BE CONSIDERED AS INCIDENTIAL TO EARTH EXCAVATION.

THE FOLLOWING RATES OF APPLICATION HAVE BEEN USED IN CALCULATING PLAN QUANTITIES.

| | |
|---|---|
| HOT-MIX ASPHALT | 112 LB/IN/SQ. YD. |
| AGGREGATE BASE COURSE, TYPE A | 2.05 TON/CU. YD. |
| BITM. MAT. (PRIME COAT) | 0.1 GAL/SQ. YD. ON PAVEMENT |
| | 0.4 GAL/SQ. YD. ON EARTH OR AGGREGATE |
| AGGREGATE (PRIME COAT) | 4 LB/SQ. YD. |
| AGGREGATE DITCH | 1.8 TON/CU. YD. |
| STONE RIPRAP | 1.5 TON/CU. YD. |
| AGGREGATE SURFACE COURSE, TYPE A | 2.05 TON/CU. YD. |
| AGGREGATE FOR DRIVEWAY MAINTENANCE | 2.0 TON/CU. YD. |

THE CONTRACTOR SHALL PROVIDE ACCESS TO ALL PRIVATE, FIELD AND COMMERCIAL ENTRANCES AT ALL TIMES DURING CONSTRUCTION.

AT LOCATIONS WHERE EXISTING PIPE CULVERTS ARE REMOVED AND NOT REPLACED, THE CONTRACTOR SHALL BACKFILL THE EXCAVATION BETWEEN THE OUTSIDE EDGE OF PROPOSED SHOULDERS AND UP TO THE PROPOSED PAVEMENT OR PAVEMENT PATCH SUBGRADE WITH CONTROLLED LOW STRENGTH MATERIAL. THIS WORK SHALL BE CONSIDERED INCIDENTAL TO PIPE CULVERT REMOVAL.

THE FOLLOWING PAY ITEMS HAVE BEEN INCLUDED TO ESTABLISH UNIT RATES:

- TEMPORARY DITCH CHECKS
- INLET FILTERS
- WATER MAIN 4"
- WATER MAIN 6"
- WATER MAIN 8"
- WATER SERVICE LINE 1"
- WATER SERVICE LINE 1½"
- WATER SERVICE LINE 2"
- ADJUSTING WATER SERVICE LINES
- FIRE HYDRANTS TO BE MOVED
- DOMESTIC METER VAULTS TO BE MOVED
- DOMESTIC WATER SERVICE BOXES TO BE MOVED
- AGGREGATE FOR DRIVEWAY MAINTENANCE

Rice, Berry and Associates
A Division of Hampton, Lenzini and Renwick, Inc.
Civil & Structural Engineers
801 S. Durkin Drive
Springfield, Illinois 62704
217-546-3400

Account Number 03-47-0001-1
Date: 03-20-07
DESIGNED: L.F.S. | CHECKED: S.W.M. | DRAWN: T.W.K.

# STANDARDS AND GENERAL NOTES

**SECTION 99-02118-00-FP**

**F.A.U. 9713 / EAST PLEASANT HILL ROAD**

**JACKSON COUNTY**

| ROUTE NO. | SECTION | COUNTY | TOTAL SHEETS | SHEET NO. |
|---|---|---|---|---|
| FAU 9713 | 00-02118 -00-FP | JACKSON | 122 | 3 |
| FED. ROAD DIST. NO. | | ILLINOIS | FED. AID PROJECT- | |

CONTRACT NO. 99219

## SUMMARY OF QUANTITIES

| | CODE NO. | ITEM | UNIT | CONSTRUCTION TYPE CODE: I000 | X028-2A | X080-2A | TOTAL QUANTITY |
|---|---|---|---|---|---|---|---|
| | 20100110 | TREE REMOVAL (6 TO 15 UNITS DIAMETER) | UNIT | 1924 | | | 1924 |
| | 20100210 | TREE REMOVAL (OVER 15 UNITS DIAMETER) | UNIT | 1373 | | | 1373 |
| | 20100500 | TREE REMOVAL, ACRES | ACRE | 1.25 | | | 1.25 |
| | 20200100 | EARTH EXCAVATION | CU YD | 14641 | | | 14641 |
| | 20400800 | FURNISHED EXCAVATION | CU YD | 11412 | | | 11412 |
| | 20700110 | POROUS GRANULAR EMBANKMENT | TON | | 425 | 270 | 695 |
| | 20800150 | TRENCH BACKFILL | CU YD | 870.3 | | | 870.3 |
| * | 25001000 | SEEDING, CLASS 2 (SPECIAL) | ACRE | 8.04 | | | 8.04 |
| | 25100630 | EROSION CONTROL BLANKET | SQ YD | 5425 | | | 5425 |
| * | 25101005 | HEAVY DUTY EXCELSIOR BLANKET | SQ YD | 1816 | | | 1816 |
| | 28000250 | TEMPORARY EROSION CONTROL SEEDING | POUND | 3216 | | | 3216 |
| | 28000300 | TEMPORARY DITCH CHECKS | EACH | 38 | | | 38 |
| | 28000400 | PERIMETER EROSION BARRIER | FOOT | 7387 | | | 7387 |
| | 28000500 | INLET AND PIPE PROTECTION | EACH | 75 | | | 75 |
| | 28000510 | INLET FILTERS | EACH | 65 | | | 65 |
| | 28100207 | STONE RIPRAP, CLASS A4 | TON | | | 670 | 670 |
| | 28200200 | FILTER FABRIC | SQ YD | 115 | | | 115 |
| | 28300400 | AGGREGATE DITCH | TON | 51 | | | 51 |
| | 35100100 | AGGREGATE BASE COURSE, TYPE A | TON | 11296 | | | 11296 |
| | 35100300 | AGGREGATE BASE COURSE, TYPE A 4" | SQ YD | 2001 | | | 2001 |
| | 35501316 | HOT-MIX ASPHALT BASE COURSE, 8" | SQ YD | 1676 | | | 1676 |
| | 40200100 | AGGREGATE SURFACE COURSE, TYPE A | TON | 753 | | | 753 |
| | 40600100 | BITUMINOUS MATERIALS (PRIME COAT) | GALLON | 10061 | | | 10061 |
| | 40600300 | AGGREGATE (PRIME COAT) | TON | 7 | | | 7 |
| | 40600635 | LEVELING BINDER (MACHINE METHOD), N70 | TON | 458 | | 5 | 463 |
| | 40600982 | HOT-MIX ASPHALT SURFACE REMOVAL - BUTT JOINT | SQ YD | 147 | | | 147 |
| | 40600990 | TEMPORARY RAMP | SQ YD | 210 | | | 210 |
| | 40603085 | HOT-MIX ASPHALT BINDER COURSE, IL-19.0, N70 | TON | 4570 | | | 4570 |
| | 40603340 | HOT-MIX ASPHALT SURFACE COURSE, MIX "D", N70 | TON | 3011 | | 20 | 3031 |
| | 40800050 | INCIDENTAL HOT-MIX ASPHALT SURFACING | TON | 249 | | | 249 |
| | 42300200 | PORTLAND CEMENT CONCRETE DRIVEWAY PAVEMENT, 6 INCH | SQ YD | 35 | | | 35 |
| | 44000500 | COMBINATION CURB AND GUTTER REMOVAL | FOOT | 128 | | | 128 |
| | 44300200 | STRIP REFLECTIVE CRACK CONTROL TREATMENT | FOOT | 2535 | | | 2535 |
| | 48100500 | AGGREGATE SHOULDERS, TYPE A 6" | SQ YD | 4339 | | | 4339 |
| | 48203021 | HOT-MIX ASPHALT SHOULDERS, 6" | SQ YD | 782 | | | 782 |
| * | 50105220 | PIPE CULVERT REMOVAL | FOOT | 461 | | | 461 |
| | 50300225 | CONCRETE STRUCTURES | CU YD | | | 36.2 | 36.2 |
| | 50300280 | CONCRETE ENCASEMENT | CU YD | | | 3.2 | 3.2 |
| | 50400405 | PRECAST PRESTRESSED CONCRETE DECK BEAMS (21" DEPTH) | SQ FT | | | 1950 | 1950 |
| | 50500505 | STUD SHEAR CONNECTORS | EACH | | | 48 | 48 |
| | 50800105 | REINFORCEMENT BARS | POUND | | | 4640 | 4640 |
| | 50800205 | REINFORCEMENT BARS, EPOXY COATED | POUND | | 28370 | | 28370 |
| | 50901050 | STEEL RAILING TYPE SM | FOOT | | | 104 | 104 |
| | 51201400 | FURNISHING STEEL PILES HP10X42 | FOOT | | | 935 | 935 |
| | 51202305 | DRIVING PILES | FOOT | | | 935 | 935 |
| | 51203400 | TEST PILE STEEL HP10X42 | EACH | | | 1 | 1 |
| | 51500100 | NAME PLATES | EACH | | 1 | 1 | 2 |
| | 54002020 | EXPANSION BOLTS ¾ INCH | EACH | | 100 | | 100 |
| | 54003000 | CONCRETE BOX CULVERTS | CU YD | | 112.3 | | 112.3 |
| | 54200640 | PIPE CULVERTS, TYPE 1, CORRUGATED STEEL OR ALUMINUM CULVERT PIPE 15" | FOOT | 126 | | | 126 |
| | 54200655 | PIPE CULVERTS, TYPE 1, CORRUGATED STEEL OR ALUMINUM CULVERT PIPE 30" | FOOT | 22 | | | 22 |
| | 54201279 | PIPE CULVERTS, TYPE 2 RCCP 24" | FOOT | 115 | | | 115 |
| | 54201285 | PIPE CULVERTS, TYPE 2 RCCP 30" | FOOT | 71 | | | 71 |
| | 54213657 | PRECAST REINFORCED CONCRETE FLARED END SECTIONS 12" | EACH | 5 | | | 5 |
| | 54213660 | PRECAST REINFORCED CONCRETE FLARED END SECTIONS 15" | EACH | 3 | | | 3 |
| | 54213663 | PRECAST REINFORCED CONCRETE FLARED END SECTIONS 18" | EACH | 2 | | | 2 |
| | 54213669 | PRECAST REINFORCED CONCRETE FLARED END SECTIONS 24" | EACH | 5 | | | 5 |
| | 54213675 | PRECAST REINFORCED CONCRETE FLARED END SECTIONS 30" | EACH | 2 | | | 2 |
| | 54213870 | STEEL END SECTIONS 15" | EACH | 8 | | | 8 |
| | 54213885 | STEEL END SECTIONS 30" | EACH | 2 | | | 2 |
| | 55019500 | STORM SEWERS, TYPE 1, RCP, STORM DRAIN, AND SEWER PIPE, CLASS IV 12" | FOOT | 1355 | | | 1355 |
| | 55019600 | STORM SEWERS, TYPE 1, RCP, STORM DRAIN, AND SEWER PIPE, CLASS IV 15" | FOOT | 106 | | | 106 |
| | 55019700 | STORM SEWERS, TYPE 1, RCP, STORM DRAIN, AND SEWER PIPE, CLASS IV 18" | FOOT | 38 | | | 38 |
| | 55019900 | STORM SEWERS, TYPE 1, RCP, STORM DRAIN, AND SEWER PIPE, CLASS IV 24" | FOOT | 93 | | | 93 |
| | 55021600 | STORM SEWERS, TYPE 2, RCP, STORM DRAIN, AND SEWER PIPE, CLASS III 12" | FOOT | 274 | | | 274 |
| | 55021700 | STORM SEWERS, TYPE 2, RCP, STORM DRAIN, AND SEWER PIPE, CLASS III 15" | FOOT | 399 | | | 399 |
| | 55021800 | STORM SEWERS, TYPE 2, RCP, STORM DRAIN, AND SEWER PIPE, CLASS III 18" | FOOT | 50 | | | 50 |
| | 55100500 | STORM SEWER REMOVAL 12" | FOOT | 28 | | | 28 |
| △ | 56100500 | WATER MAIN 4" | FOOT | 100 | | | 100 |
| △ | 56100600 | WATER MAIN 6" | FOOT | 100 | | | 100 |

* SEE SPECIAL PROVISIONS

## SUMMARY OF QUANTITIES

| | CODE NO. | ITEM | UNIT | CONSTRUCTION TYPE CODE: I000 | X028-2A | X080-2A | TOTAL QUANTITY |
|---|---|---|---|---|---|---|---|
| △ | 56100700 | WATER MAIN 8" | FOOT | 100 | | | 100 |
| △ | 56200300 | WATER SERVICE LINE 1" | FOOT | 50 | | | 50 |
| △ | 56200500 | WATER SERVICE LINE 1½" | FOOT | 50 | | | 50 |
| △ | 56200700 | WATER SERVICE LINE 2" | FOOT | 50 | | | 50 |
| △ | 56300300 | ADJUSTING WATER SERVICE LINES | FOOT | 100 | | | 100 |
| △ | 56400100 | FIRE HYDRANTS TO BE MOVED | EACH | 2 | | | 2 |
| △ | 56500100 | DOMESTIC METER VAULTS TO BE MOVED | EACH | 2 | | | 2 |
| △ | 56500200 | DOMESTIC WATER SERVICE BOXES TO BE MOVED | EACH | 2 | | | 2 |
| | 58100200 | WATERPROOFING MEMBRANE SYSTEM | SQ YD | | | 231 | 231 |
| | 58300100 | PORTLAND CEMENT MORTAR FAIRING COURSE | FOOT | | | 150 | 150 |
| | 59300100 | CONTROLLED LOW-STRENGTH MATERIAL | CU YD | 303.8 | | | 303.8 |
| * | 60224600 | RESTRICTED DEPTH MANHOLES, 4'-DIAMETER, TYPE 1 FRAME, CLOSED LID | EACH | 1 | | | 1 |
| * | 60225100 | RESTRICTED DEPTH MANHOLES, 4'-DIAMETER, TYPE 8 GRATE | EACH | 3 | | | 3 |
| * | 60225124 | RESTRICTED DEPTH MANHOLES, 4'-DIAMETER, TYPE 24 FRAME AND GRATE | EACH | 2 | | | 2 |
| * | 60225400 | RESTRICTED DEPTH MANHOLES, 5'-DIAMETER, TYPE 1 FRAME, CLOSED LID | EACH | 1 | | | 1 |
| | 60236200 | INLETS, TYPE A, TYPE 8 GRATE | EACH | 4 | | | 4 |
| | 60237470 | INLETS, TYPE A, TYPE 24 FRAME AND GRATE | EACH | 8 | | | 8 |
| | 60240215 | INLETS, TYPE B, TYPE 1 FRAME, CLOSED LID | EACH | 1 | | | 1 |
| | 60240301 | INLETS, TYPE B, TYPE 8 GRATE | EACH | 2 | | | 2 |
| | 60240328 | INLETS, TYPE B, TYPE 24 FRAME AND GRATE | EACH | 2 | | | 2 |
| | 60500050 | REMOVING CATCH BASINS | EACH | 2 | | | 2 |
| | 60605000 | COMBINATION CONCRETE CURB AND GUTTER, TYPE B-6.24 | FOOT | 11187 | | | 11187 |
| | 60608600 | COMBINATION CONCRETE CURB AND GUTTER, TYPE M-6.06 | FOOT | 11 | | | 11 |
| | 60618300 | CONCRETE MEDIAN SURFACE, 4 INCH | SQ FT | 110 | | | 110 |
| | 63100075 | TRAFFIC BARRIER TERMINAL, TYPE 5A | EACH | 4 | | | 4 |
| * | 63100167 | TRAFFIC BARRIER TERMINAL TYPE 1, SPECIAL (TANGENT) | EACH | 4 | | | 4 |
| | 66600105 | FURNISHING AND ERECTING RIGHT-OF-WAY MARKERS | EACH | 95 | | | 95 |
| | 67000400 | ENGINEER'S FIELD OFFICE, TYPE A | CAL MO | 18 | | | 18 |
| * | 67100100 | MOBILIZATION | L SUM | 1 | | | 1 |
| * | 70101700 | TRAFFIC CONTROL AND PROTECTION | L SUM | 1 | | | 1 |
| | 70300100 | SHORT-TERM PAVEMENT MARKING | FOOT | 882 | | | 882 |
| | 70300210 | TEMPORARY PAVEMENT MARKING - LETTERS AND SYMBOLS | SQ FT | 93.6 | | | 93.6 |
| | 70300625 | TEMPORARY PAINT PAVEMENT MARKING LINE 4" | FOOT | 25998 | | | 25998 |
| | 70300645 | TEMPORARY PAINT PAVEMENT MARKING LINE 12" | FOOT | 674 | | | 674 |
| | 70300660 | TEMPORARY PAINT PAVEMENT MARKING LINE 24" | FOOT | 107 | | | 107 |
| | 70301000 | WORK ZONE PAVEMENT MARKING REMOVAL | SQ FT | 292 | | | 292 |
| | 72000100 | SIGN PANEL - TYPE 1 | SQ FT | 37.8 | | | 37.8 |
| | 72900100 | METAL POST - TYPE A | FOOT | 75 | | | 75 |
| △ | 78000100 | THERMOPLASTIC PAVEMENT MARKING - LETTERS AND SYMBOLS | SQ FT | 93.6 | | | 93.6 |
| △ | 78000200 | THERMOPLASTIC PAVEMENT MARKING - LINE 4" | FOOT | 4806 | | | 4806 |
| △ | 78000600 | THERMOPLASTIC PAVEMENT MARKING - LINE 12" | FOOT | 674 | | | 674 |
| △ | 78000650 | THERMOPLASTIC PAVEMENT MARKING - LINE 24" | FOOT | 107 | | | 107 |
| △ | 78001110 | PAINT PAVEMENT MARKING - LINE 4" | FOOT | 21192 | | | 21192 |
| △ | 78100100 | RAISED REFLECTIVE PAVEMENT MARKER | EACH | 188 | | | 188 |
| * | 78200300 | PRISMATIC CURB REFLECTOR | EACH | 8 | | | 8 |
| * | 78200400 | GUARDRAIL REFLECTORS | EACH | 6 | | | 6 |
| | 78201000 | TERMINAL MARKER - DIRECT APPLIED | EACH | 4 | | | 4 |
| * | 78300100 | PAVEMENT MARKING REMOVAL | SQ FT | 9695 | | | 9695 |
| * | 78300200 | RAISED REFLECTIVE PAVEMENT MARKER REMOVAL | EACH | 17 | | | 17 |
| * | X0545000 | BOX CULVERT REMOVAL | FOOT | 42 | | | 42 |
| * | X6020074 | INLETS, TYPE A, TYPE 3V FRAME AND GRATE | EACH | 18 | | | 18 |
| * | X6020075 | INLETS, TYPE B, TYPE 3V FRAME AND GRATE | EACH | 12 | | | 12 |
| * | Z0000940 | AGGREGATE FOR DRIVEWAY MAINTENANCE | TON | 100 | | | 100 |
| * | Z0022800 | FENCE REMOVAL | FOOT | 385 | | | 385 |
| +* | Z0076600 | TRAINEES | HOUR | 500 | | | 500 |
| * | XX001306 | SIDEWALK REMOVAL AND REPLACEMENT | SQ FT | 24 | | | 24 |
| △* | XX002063 | LIGHTING SYSTEM COMPLETE | L SUM | 1 | | | 1 |
| | XX002998 | RESTRICTED DEPTH MANHOLES, 4'-DIAMETER, TYPE 3V FRAME AND GRATE | EACH | 11 | | | 11 |
| △ | XX006348 | ELECTRIC SERVICE | L SUM | 1 | | | 1 |

* SEE SPECIAL PROVISIONS

\+ Y080

△ SPECIALTY ITEMS


HLR

Rice, Berry and Associates
A Division of Hampton, Lenzini and Renwick, Inc.
Civil & Structural Engineers
801 S. Durkin Drive
Springfield, Illinois 62704
217-546-3400

Account Number 03-47-0001-1

Date: 03-20-07

DESIGNED: L.F.S. | CHECKED: S.W.M. | DRAWN: W.J.S.


## SUMMARY OF QUANTITIES

**SECTION 99-02118-00-FP**

**F.A.U. 9713 / EAST PLEASANT HILL ROAD**

**JACKSON COUNTY**

DATE: 23-Mar-07 06:12
FILE: P:\03\0347000I\Cad\Phase II\plans\4700ISUMQ.dgn

| ROUTE NO. | SECTION | COUNTY | TOTAL SHEETS | SHEET NO. |
|---|---|---|---|---|
| FAU 9713 | 99-02118-00-FP | JACKSON | 122 | 4 |
| FED. ROAD DIST. NO. | | ILLINOIS | FED. AID PROJECT- | |

CONTRACT NO. 99219

## ENTRANCE SCHEDULE

| LOCATION | TYPE | EXISTING SURFACE | EXISTING WIDTH | PROPOSED WIDTH | P.C.C. DWAY PVT. 6" | INC. H.M.A. SURF. 2" | AGG. SURF. CSE. TY. A 4" P.E. | AGG. SURF. CSE. TY. A 6" C.E. | BIT. MATL. PRIME COAT | AGG. SURF. CSE. TY. A 6" P.E. | AGG. SURF. CSE. TY. A 8" C.E. |
|---|---|---|---|---|---|---|---|---|---|---|---|
| PLEASANT HILL ROAD | | | | | SQ. YD. | TON | TON | TON | GAL. | TON | TON |
| LT. STA. 13+15 | P.E. | AGG. | 12 | 12 | | 5 | 10 | | 18 | | |
| LT. STA. 14+15 | C.E. & M.B. | AGG. | 35 | 35 | | 13 | | 39 | 45 | | |
| LT. STA. 15+40 | C.E. | BIT. | 20 | 20 | | 7 | | 22 | 25 | | |
| RT. STA. 15+71 | C.E. | BIT. | 18 | 18 | | 3 | | 10 | 11 | | |
| LT. STA. 16+29 | P.E. & M.B. | BIT. | 18 | 18 | | 6 | 13 | | 22 | | |
| RT. STA. 16+84 | C.E. | BIT. | 16 | 16 | | 3 | | 9 | 10 | | |
| RT. STA. 17+06 | P.E. | BIT. | 14 | 14 | | 2 | 4 | | 8 | | |
| LT. STA. 17+15 | P.E. & M.B. | BIT. | 16 | 16 | | 5 | 10 | | 18 | | |
| RT. STA. 17+43 | P.E. | AGG. | 24 | 24 | | 3 | 6 | | 11 | | |
| LT. STA. 18+15 | C.E. & M.B. | BIT. | 28 | 28 | | 11 | | 34 | 40 | | |
| LT. STA. 18+64 | P.E. & M.B. | BIT. | 18 | 18 | | 5 | 11 | | 19 | | |
| RT. STA. 18+87 | P.E. | BIT. | 12 | 12 | | 2 | 4 | | 7 | | |
| LT. STA. 19+76 | P.E. | BIT. | 14 | 14 | | 3 | 5 | | 9 | | |
| RT. STA. 19+93 | P.E. | BIT. | 18 | 18 | | 2 | 5 | | 9 | | |
| RT. STA. 20+79 | F.E. | AGG. | 14 | 14 | | 2 | 4 | | 8 | | |
| LT. STA. 20+94 | P.E. & M.B. | AGG. | 12 | 12 | | 2 | 3 | | 6 | | |
| RT. STA. 20+95 | P.E. | AGG. | 12 | 12 | | 2 | 4 | | 7 | | |
| LT. STA. 21+72 | P.E. & M.B. | AGG. | 12 | 12 | | 2 | 3 | | 6 | | |
| RT. STA. 22+12 | P.E. | AGG. | 14 | 14 | | 2 | 4 | | 8 | 4 | |
| LT. STA. 23+11 | P.E. & M.B. | BIT. | 20 | 20 | | 2 | 5 | | 9 | | |
| RT. STA. 23+46 | P.E. | AGG. | 12 | 12 | | 2 | 4 | | 7 | 3 | |
| RT. STA. 23+69 | P.E. | AGG. | 20 | 20 | | 3 | 6 | | 16 | 5 | |
| LT. STA. 23+71 | P.E. | BIT. | 12 | 12 | | 2 | 4 | | 6 | | |
| LT. STA. 23+94 | F.E. | AGG. | 12 | 12 | | 3 | 5 | | 10 | | |
| RT. STA. 24+70 | P.E. | AGG. | 12 | 12 | | 2 | 5 | | 8 | 5 | |
| LT. STA. 24+96 | P.E. & M.B. | AGG. | 16 | 16 | | 3 | 6 | | 11 | | |
| RT. STA. 25+51 | P.E. | AGG. | 14 | 14 | | 3 | 5 | | 10 | 5 | |
| RT. STA. 26+40 | P.E. | AGG. | 12 | 12 | | 3 | 5 | | 9 | | |
| LT. STA. 26+69 | P.E. & M.B. | AGG. | 14 | 14 | | 3 | 6 | | 10 | | |
| RT. STA. 27+71 | F.E. | BIT. | 12 | 12 | | 2 | 5 | | 9 | | |
| RT. STA. 29+19 | F.E. | BIT. | 16 | 16 | | 3 | 6 | | 11 | | |
| LT. STA. 29+24 | P.E. & M.B. | AGG. | 35 | 35 | | 4 | 8 | | 15 | | |
| RT. STA. 31+60 | F.E. | AGG. | 28 | 28 | | 4 | 9 | | 16 | | |
| LT. STA. 34+08 | M.B. | BIT. | | | | 0 | 0 | | 0 | | |
| RT. STA. 34+10 | P.E. | CONC. | 18 | 18 | 35 | 4 | 8 | | 14 | | |
| RT. STA. 35+79 | P.E. | AGG. | 14 | 14 | | 4 | 8 | | 14 | | |
| RT. STA. 37+44 | P.E. | AGG. | 14 | 14 | | 4 | 8 | | 14 | 6 | |
| LT. STA. 37+52 | M.B. | | | | | | | | | | |
| RT. STA. 38+29 | P.E. | AGG. | 14 | 14 | | 4 | 8 | | 14 | 6 | |
| RT. STA. 39+44 | C.E. | BIT. | 30 | 30 | | 5 | | 14 | 16 | | |
| LT. STA. 40+59 | P.E. & M.B. | BIT. | 12 | 12 | | 2 | 4 | | 7 | | |
| RT. STA. 41+62 | P.E. | AGG. | 12 | 12 | | 2 | 5 | | 9 | 7 | |
| LT. STA. 42+90 | P.E. & M.B. | BIT. | 30 | 30 | | 16 | 33 | | 58 | | |
| RT. STA. 43+69 | P.E. | BIT. | 14 | 14 | | 6 | 12 | | 22 | | |
| LT. STA. 46+59 | F.E. | NA | NA | 16 | | 4 | 8 | | 14 | | |
| RT. STA. 49+61 | P.E. | AGG. | 16 | 16 | | 4 | 9 | | 16 | 22 | |
| LT. STA. 50+32 | M.B. | AGG. | | | | | | | | | |
| RT. STA. 50+57 | P.E. | AGG. | 20 | 20 | | 5 | 11 | | 19 | 13 | |
| RT. STA. 51+32 | P.E. | AGG. | 12 | 12 | | 1 | 3 | | 5 | 23 | |
| RT. STA. 51+91 | M.B. | | | | | 0 | 0 | | 0 | | |
| LT. STA. 53+68 | P.E. & M.B. | AGG. | 18 | 18 | | 4 | 8 | | 14 | | |
| RT. STA. 53+97 | P.E. & M.B. | AGG. | 12 | 12 | | 4 | 7 | | 13 | | |
| RT. STA. 55+12 | P.E. | AGG. | 12 | 12 | | 4 | 7 | | 13 | | |
| LT. STA. 63+14 | P.E. & M.B. | AGG. | 15 | 15 | | 1 | 3 | | 5 | 5 | |
| LT. STA. 63+87 | C.E. | AGG. | 16 | 16 | | 2 | | 5 | 6 | | 8 |
| RT. STA. 64+85 | F.E. | NA | NA | 16 | | | | | | 12 | |
| RT. STA. 65+64 | P.E. | AGG. | 18 | 18 | | 9 | 17 | | 31 | 10 | |
| RT. STA. 66+38 | P.E. | AGG. | 20 | 20 | | 9 | 19 | | 34 | | |
| LT. STA. 66+66 | C.E. | AGG. | 20 | 20 | | 2 | | 6 | 6 | | 10 |
| LT. STA. 67+35 | P.E. | AGG. | 12 | 12 | | 1 | 3 | | 5 | 16 | |
| LT. STA. 69+87 | P.E. & M.B. | AGG. | 24 | 24 | | 3 | 7 | | 12 | | |
| RT. STA. 70+24 | P.E. | AGG. | 14 | 14 | | 7 | 14 | | 25 | | |
| LT. STA. 70+98 | P.E. | AGG. | 20 | 20 | | 3 | 6 | | 10 | | |
| RT. STA. 72+55 | P.E. | AGG. | 12 | 12 | | 7 | 14 | | 25 | | |
| | | | | | | | | | | | |
| GIANT CITY ROAD | | | | | | | | | | | |
| LT. STA. 94+54 | F.E. | EARTH | 16 | 16 | | 0 | 0 | | 0 | | |
| RT. STA. 97+33 | M.B. | BIT. | | | | 0 | 0 | | 0 | | |
| LT. STA. 97+49 | P.E. | BIT. | 12 | 12 | | 6 | 13 | | 21 | | |
| | | | | | | | | | | | |
| WARREN ROAD | | | | | | | | | | | |
| RT. STA. 301+56 | P.E. | AGG. | 18 | 18 | | 4 | 25 | | 15 | 24 | |
| RT. STA. 301+88 | P.E. | NA | NA | 12 | | 3 | 5 | | 9 | 0 | |
| TOTAL | | | | | 35 | 249 | 430 | 139 | 900 | 166 | 18 |

• SEE SCHEDULE OF QUANTITIES SHEET FOR PROJECT TOTAL QUANTITY

## COMBINATION CONCRETE CURB AND GUTTER, TYPE B-6.24

| LOCATION | FOOT |
|---|---|
| EAST PLEASANT HILL | |
| LT 12+36 TO LT 50+82.15 | 3,846 |
| RT 12+36 TO RT 55+50 | 4,314 |
| LT 52+08.40 TO LT 74+58 | 2,250 |
| RT 84+28.01 TO RT 84+27.83 (ISLAND) | 30 |
| | |
| WARREN RD | |
| LT 300+11.48 TO LT 300+61.39 | 75 |
| RT 300+19.39 TO RT 300+69.29 | 82 |
| LT 300+61.39 TO LT 303+60 | 299 |
| RT 300+69.29 TO RT 303+60 | 291 |
| | |
| TOTAL | 11,187 |

## COMBINATION CONCRETE CURB AND GUTTER, TYPE M-6.06

| LOCATION | FOOT |
|---|---|
| EAST PLEASANT HILL | |
| RT 84+28.01 TO RT 84+27.83 (ISLAND) | 11 |
| | |
| TOTAL | 11 |

## TREE REMOVAL, ACRES

| LOCATION | ACRE |
|---|---|
| EAST PLEASANT HILL RD | |
| LT. STA. 41+45 TO LT. STA. 42+99 | 0.037 |
| RT. STA. 43+77 TO RT. STA. 49+62 | 0.065 |
| RT. STA. 61+45 TO RT. STA. 65+55 | 0.145 |
| RT. STA. 66+69 TO RT. STA. 70+09 | 0.141 |
| RT. STA. 71+97 TO RT. STA. 72+45 | 0.017 |
| RT. STA. 72+95 TO RT. STA. 74+87 | 0.027 |
| LT. STA. 78+64 TO LT. STA. 83+42 | 0.196 |
| RT. STA. 78+94 TO RT. STA. 84+22 | 0.429 |
| SUBTOTAL | 1.057 |
| | |
| GIANT CITY ROAD | |
| LT. STA. 95+71 TO LT. STA. 97+37+42 | 0.038 |
| LT. STA. 97+63 TO LT. STA. 99+75 | 0.026 |
| SUBTOTAL | 0.064 |
| TOTAL PROJECT | 1.121 |
| TOTAL PROJECT USE | 1.25 |

## SEEDING

| LOCATION | CLASS 2 SPECIAL | NITROGEN | PHOSPHORUS | POTASSIUM | AGG. GROUND LIMESTONE | MULCH METHOD 2 | TEMP EROSION CONTROL SEEDING |
|---|---|---|---|---|---|---|---|
| | | 90 LBS /ACRE | 90 LBS /ACRE | 90 LBS /ACRE | 2 TONS /ACRE | 2 TONS /ACRE | •100LBS /ACRE/APPL |
| | ACRE | POUND | POUND | POUND | TON | TON | POUND |
| EAST PLEASANT HILL ROAD | 5.97 | 537 | 537 | 537 | 12 | 12 | 2388 |
| | | | | | | | |
| GIANT CITY ROAD | 1.81 | 163 | 163 | 163 | 4 | 4 | 726 |
| | | | | | | | |
| WARREN ROAD | 0.26 | 23 | 23 | 23 | 1 | 1 | 102 |
| | | | | | | | |
| TOTAL PROJECT | 8.04 | 723 | 723 | 723 | 17 | 17 | 3216 |

• 4 APPLICATIONS


Rice, Berry and Associates
A Division of Hampton, Lenzini and Renwick, Inc.
Civil & Structural Engineers
801 S. Durkin Drive
Springfield, Illinois 62704
217-546-3400


Account Number 03-47-0001-1

Date: 03-20-07

DESIGNED: L.F.S. | CHECKED: S.W.M. | DRAWN: W.J.S.

# SCHEDULE OF QUANTITIES

SECTION 99-02118-00-FP

F.A.U. 9713 / EAST PLEASANT HILL ROAD

JACKSON COUNTY

| ROUTE NO. | SECTION | COUNTY | TOTAL SHEETS | SHEET NO. |
|---|---|---|---|---|
| FAU 9713 | 99-02118-00-FP | JACKSON | 122 | 5 |
| FED. ROAD DIST. NO. | | ILLINOIS | FED. AID PROJECT- | |

CONTRACT NO. 99219

# PAVEMENT MARKING

| LOCATION | PERMANENT | | | | | | | | | TEMPORARY PAINT | | | | | | | SHORT TERM | WORK ZONE PAVEMENT MARKING REMOVAL | PAVEMENT MARKING REMOVAL |
|---|---|---|---|---|---|---|---|---|---|---|---|---|---|---|---|---|---|---|---|
| | THERMOPLASTIC | | | | | | | PAINT | | | | | | | | | | | |
| | LETTERS & SYMBOLS | SOLID SINGLE YELLOW 4" LINE | SOLID DOUBLE YELLOW 4" LINE | SOLID SINGLE WHITE 4" LINE | SOLID DIAGONAL WHITE 12" LINE | SOLID DIAGONAL YELLOW 12" LINE | SOLID SINGLE WHITE 24" LINE | SOLID SINGLE WHITE 4" LINE | SOLID SINGLE YELLOW 4" LINE | LETTERS & SYMBOLS | SOLID SINGLE YELLOW 4" LINE | SOLID DOUBLE YELLOW 4" LINE | SOLID SINGLE WHITE 4" LINE | SOLID DIAGONAL WHITE 12" LINE | SOLID DIAGONAL YELLOW 12" LINE | SOLID SINGLE WHITE 24" LINE | YELLOW 4" LINE ℄ | | |
| | SQ FT | FOOT | FOOT | FOOT | FOOT | FOOT | FOOT | FOOT | FOOT | SQ FT | FOOT | FOOT | FOOT | FOOT | FOOT | FOOT | FOOT | SQ YD | SQ YD |
| EAST PLEASANT HILL | | | | | | | | | | | | | | | | | | | |
| CL STA 12+36 TO CL STA 84+30 | | | | | | | | | | | | | | | | | 720 | 238 | |
| RT STA 51+05 | | | | | | | 13 | | | | | | | | | 13 | | | 26 |
| LT STA 51+77 | | | | | | | 25 | | | | | | | | | 25 | | | 50 |
| RT STA 55+50 TO RT STA 84+48.15 | | | | | | | | 2979 | | | | | 2979 | | | | | | 983 |
| LT STA 74+58 TO LT STA 84+21.66 | | | | | | | | 1002 | | | | | 1002 | | | | | | 331 |
| RT STA 12+36 TO RT STA 51+05 | | | | | | | | | 3869 | | 3869 | | | | | | | | 1277 |
| LT STA 12+36 TO LT STA 51+05 | | | | | | | | | 3869 | | 3869 | | | | | | | | 1277 |
| RT STA 51+77 TO RT STA 84+30 | | | | | | | | | 3253 | | 3253 | | | | | | | | 1073 |
| LT STA 51+77 TO LT STA 84+30 | | | | | | | | | 3253 | | 3253 | | | | | | | | 1073 |
| RT STA 83+03.96 TO RT STA 83+98 | 15.6 | | | 94 | | | | | | | | | 94 | | | | | | 31 |
| RT STA 83+15 | 15.6 | | | | | | | | | 15.6 | | | | | | | | | 16 |
| RT STA 83+82 | | | | | | | | | | 15.6 | | | | | | | | | 16 |
| LT STA 83+91 TO LT STA 84+39 | | | | 48 | | | | | | | | | 48 | | | | | | 16 |
| LT STA 83+91 TO LT STA 84+38 | | | | 68 | | | | | | | | | 68 | | | | | | 70 |
| RT STA 83+98 TO RT STA 84+39 | | | | 41 | 48 | | | | | | | | 41 | 48 | | | | | 14 |
| RT STA 83+98 TO RT STA 84+40 | | | | 60 | | | | | | | | | 60 | | | | | | 61 |
| RT STA 84+30 | | | | | 41 | | 18 | | | | | | | 41 | | 18 | | | 36 |
| RT STA 84+30 | | | | | | | 12 | | | | | | | | | 12 | | | 24 |
| | | | | | | | | | | | | | | | | | | | |
| GIANT CITY ROAD | | | | | | | | | | | | | | | | | | | |
| CL STA 88+86.23 TO CL STA 101+53.78 | 15.6 | | | | | | | | | | | | | | | | 127 | 42 | |
| RT 92+70 | 15.6 | | | | | | | | | 15.6 | | | | | | | | | 16 |
| RT 93+56 | 15.6 | | | | | | | | | 15.6 | | | | | | | | | 16 |
| CL 95+33 | 15.6 | | | | | | | | | 15.6 | | | | | | | | | 16 |
| CL 96+08 | | | | | | | | | | 15.6 | | | | | | | | | 16 |
| CL 94+93.75 | | | | | | | 12 | | | | | | | | | 12 | | | 24 |
| RT STA 88+86.23 TO RT 93+76.23 | | | | | | | | 490 | | | | | 490 | | | | | | 162 |
| RT STA 96+10.34 TO RT 101+53.78 | | | | | | | | 543 | | | | | 543 | | | | | | 179 |
| LT STA 88+86.23 TO LT 101+53.78 | | 178 | | | | | | 1268 | | | | | 1268 | | | | | | 418 |
| RT STA 88+86.23 TO RT 90+64.32 | | 178 | | | | | | | | | 178 | | | | | | | | 59 |
| LT STA 88+86.23 TO LT 90+64.32 | | | | | | | | | | | 178 | | | | | | | | 59 |
| RT STA 90+64.32 TO RT 94+23 | | | 717 | | | | | | | | | 717 | | | | | | | 342 |
| LT STA 90+64.32 TO LT 94+23 | | | 717 | | | 105 | | | | | | 717 | | | 105 | | | | 237 |
| RT STA 91+81.23 TO RT 94+53 | | | | 272 | | | | | | | | | 272 | | | | | | 90 |
| RT STA 94+77 TO RT 95+15 | | | | 38 | | | | | | | | | 38 | | | | | | 13 |
| LT STA 94+93.78 TO LT STA 96+08.78 | | | | 115 | | | | | | | | | 115 | | | | | | 38 |
| RT STA 94+93.78 TO RT STA 100+88.78 | | | | | | | | | | | | | | | | | | | 393 |
| RT STA 96+08.78 TO LT STA 100+88.78 | | | 1190 | | | | | | | | | 1190 | | | | | | | 797 |
| RT STA 100+88.78 TO RT STA 101+53.78 | | | 960 | | | 480 | | | | | | 960 | | | 480 | | | | 21 |
| LT STA 100+88.78 TO LT STA 101+53.78 | | 65 | | | | | | | | | 65 | | | | | | | | 21 |
| | | 65 | | | | | | | | | 65 | | | | | | | | |
| WARREN | | | | | | | | | | | | | | | | | | | |
| CL STA 300+15.24 TO CL STA 303+60 | | | | | | | | | | | | | | | | | | 12 | |
| RT STA 300+27 TO RT STA 303+60 | | | | | | | | | | | | | | | | | 35 | | 110 |
| LT STA 300+27 TO LT STA 303+60 | | | | | | | | | 333 | | 333 | | | | | | | | 110 |
| LT STA 300+27 | | | | | | | | | 333 | | 333 | | | | | | | | 54 |
| | | | | | | | 27 | | | | | | | | | 27 | | | |
| | | | | | | | | | | | | | | | | | | | |
| TOTAL | 93.6 | 486 | 3584 | 736 | 89 | 585 | 107 | 6282 | 14910 | 93.6 | 15396 | 3584 | 7018 | 89 | 585 | 107 | 882 | 292 | 9565 |


Rice, Berry and Associates
A Division of Hampton, Lenzini and Renwick, Inc.
Civil & Structural Engineers
801 S. Durkin Drive
Springfield, Illinois 62704
217-546-3400

Account Number 03-47-0001-1
Date: 09-29-06
DESIGNED: L.F.S. | CHECKED: S.W.M. | DRAWN: T.W.K.


## QUANTITY SCHEDULES

**SECTION 99-02118-00-FP**

**F.A.U. 9713 / EAST PLEASANT HILL ROAD**

**JACKSON COUNTY**

DATE: 30-Mar-07 12:13
FILE: P:\03\0347000I\Cad\Phase II\plans\4700Ir-dw.dgn

| ROUTE NO. | SECTION | COUNTY | TOTAL SHEETS | SHEET NO. |
|---|---|---|---|---|
| FAU 9713 | 99-02118-00-FP | JACKSON | 122 | 6 |
| FED. ROAD DIST. NO. | | ILLINOIS | FED. AID PROJECT- | |

CONTRACT NO. 99219

## ROADWAY QUANTITIES SCHEDULE

| LOCATION (STATION TO STATION) | HOT-MIX ASPHALT SURF CSE MIX D N70 2" MIN | HOT-MIX ASPHALT BINDER IL-19 N70 2.25" MIN | HOT-MIX ASPHALT BINDER IL-19 N70 3.75" MIN | HOT-MIX ASPHALT BASE COURSE 8" | AGGREGATE BASE COURSE TYPE A | AGGREGATE BASE COURSE TYPE A 4" | LEVELING BINDER (MACHINE METHOD) N70 | BITUMINOUS MATERIALS (PRIME COAT) 0.4 GAL/SY | BITUMINOUS MATERIALS (PRIME COAT) 0.1 GAL/SY | AGGREGATE PRIME COAT | INCIDENTAL HOT-MIX ASPHALT SURFACING 2" | HOT-MIX ASPHALT SURFACE REMOVAL BUTT-JOINT | AGGREGATE SURFACE COURSE TYPE A | TEMPORARY RAMP | HOT-MIX ASPHALT SHOULDER 6" | AGGREGATE SHOULDER TYPE A 6" | STRIP REFLECTIVE CRACK CONTROL | CONCRETE MEDIAN SURFACE 4" | P.C.C. DRIVEWAY PAVEMENT 6" |
|---|---|---|---|---|---|---|---|---|---|---|---|---|---|---|---|---|---|---|---|
| EAST PLEASANT HILL | TON | TON | TON | SQ YD | TON | SQ YD | TON | GAL | GAL | TON | TON | SQ YD | TON | SQ YD | SQ YD | SQ YD | FOOT | SQ FT | SQ YD |
| STA 12+23 TO STA 84+39.13 | 2,353 | | 4,429 | | 10,739 | | | 8,404 | | | | | | 139 | | 3572 | | 110 | |
| WARREN ROAD | | | | | | | | | | | | | | | | | | | |
| STA 300+15.24 TO STA 303+60 | 125 | 141 | | | 557 | | | 447 | | | | | | 14 | | | | | |
| GIANT CITY ROAD | | | | | | | | | | | | | | | | | | | |
| STA 88+91.23 TO STA 101+53.78 | 533 | | | 1,676 | | 2,001 | 458 | | 310 | 7 | | 147 | | 57 | 782 | 767 | 2,535 | | 35 |
| ENTRANCES | | | | | | | | 900 | | | 249 | | 753 | | | | | | |
| BRIDGE | 20 | | | | | | 5 | | | | | | | | | | | | |
| TOTAL | 3,031 | 141 | 4,429 | 1,676 | 11,296 | 2,001 | 463 | 9,751 | 310 | 7 | 249 | 147 | 753 | 210 | 782 | 4339 | 2,535 | 110 | 35 |

## RAISED REFLECTIVE MARKERS

| LOCATION | TWO-WAY AMBER | ONE-WAY AMBER | ONE-WAY CRYSTAL | BRIDGE TWO-WAY AMBER | REMOVAL |
|---|---|---|---|---|---|
| | EACH | EACH | EACH | EACH | EACH |
| EAST PLEASANT HILL ROAD | | | | | |
| CL STA 12+36 TO CL STA 51+05 | 49 | | | | |
| CL STA 51+77 TO CL STA 83+40 | 41 | | | | |
| RT STA 83+03.96 TO RT STA 84+39.87 | | | 5 | | |
| RT STA 83+98 TO RT STA 84+40 | | | 3 | | |
| LT STA 83+91TO LT STA 84+39 | | | 6 | | |
| RT STA 84+30 (ISLAND) | | | | 8 | |
| GIANT CITY ROAD | | | | | |
| CL STA 88+86.23 TO CL STA 101+54 | | | | | 17 |
| CL STA 88+86.23 TO CL STA 89+84.32 | 1 | | | | |
| RT STA 89+84.32 TO RT STA 90+64.32 | 3 | | | | |
| LT STA 89+84.32 TO LT STA 90+64.32 | 3 | | | | |
| RT STA 90+64.32 TO RT STA 94+23 | | 12 | | | |
| LT STA 90+64.32 TO LT STA 94+23 | | 10 | | | |
| RT STA 91+81.23 TO RT STA 94+53 | | | 8 | | |
| RT STA 94+75 TO RT STA 95+15 | | | 2 | | |
| LT STA 94+93.78 TO LT STA 96+08.78 | | | 4 | | |
| RT STA 94+93.78 TO RT STA 96+08.78 | 8 | | | | |
| RT STA 96+08.78 TO RT STA 100+88.78 | | 11 | | | |
| LT STA 96+08.78 TO LT STA 100+88.78 | | 11 | | | |
| RT STA 100+88.78 TO RT STA 101+53.78 | 3 | | | | |
| LT STA 100+88.78 TO LT STA 101+53.78 | 3 | | | | |
| WARREN ROAD | | | | | |
| CL STA 300+15 TO CL STA 303+60 | 5 | | | | |
| SUB TOTALTOTAL | 116 | 44 | 28 | 8 | 17 |
| PROJECT TOTAL | 188 | | | 8 | 17 |

## SIGNING

| LOCATION | SIGN PANEL TYPE 1 | | METAL POST TYPE A |
|---|---|---|---|
| | TYPE | SQ FT | FOOT |
| EAST PLEASANT HILL RD | | | |
| 19' RT STA. 51+05 | R1-1 | 6.3 | 13 |
| 19' RT STA. 51+05 | R1-4 | 0.8 | |
| 26' LT STA. 51+85 | R1-1 | 6.3 | 13 |
| 26' LT STA. 51+85 | R1-4 | 0.8 | |
| 42.85' LT STA. 83+78.68 | R1-2 | 3.9 | 12 |
| 17' RT STA. 84+30 | R1-1 | 6.3 | 12 |
| 57' RT STA. 84+07 | R1-1 | 6.3 | 12 |
| WARREN ROAD | | | |
| 27' LT STA. 300+36 | R1-1 | 6.3 | 13 |
| 27' LT STA. 300+36 | R1-4 | 0.8 | |
| TOTAL PROJECT | | 37.8 | 75 |

## EARTHWORK SCHEDULE

| LOCATION | EARTH EXCAVATION (CU YD) | SHRINKAGE FACTOR 25% | PERCENT USED | AVAILABLE* EXCAVATION (CU YD) | EMBANKMENT REQUIRED (CU YD) | EARTHWORK BALANCE (CU YD) |
|---|---|---|---|---|---|---|
| STAGE 1 | | | | | | |
| EAST PLEASANT HILL RD. | | | | | | |
| STA. 53+50 TO STA 84+39 | 7021 | 5266 | 100% | 5266 | 10623 | -5357 |
| ENTRANCES | 0 | 0 | 100% | 0 | 36 | -36 |
| GIANT CITY ROAD | | | | | | |
| STA. 88+86.23 TO STA 101+54.24 | 410 | 308 | 100% | 308 | 5464 | -5156 |
| TOTAL STAGE 1 | 7431 | 5574 | | 5574 | 16123 | -10549 |
| STAGE 2 | | | | | | |
| EAST PLEASANT HILL RD. | | | | | | |
| STA. 51+10 TO STA 53+50 | 1380 | 1035 | 100% | 1035 | 21 | 1014 |
| WARREN ROAD | | | | | | |
| STA. 300+15 TO STA 303+60 | 1625 | 1219 | 100% | 1219 | 66 | 1153 |
| TOTAL STAGE 2 | 3005 | 2254 | | 2254 | 87 | 2167 |
| STAGE 3 | | | | | | |
| EAST PLEASANT HILL RD. | | | | | | |
| STA. 12+36 TO STA 51+10 | 4205 | 3154 | 100% | 3154 | 6157 | -3003 |
| ENTRANCES | 0 | 0 | 100% | 0 | 27 | -27 |
| TOTAL STAGE 3 | 4205 | 3154 | | 3154 | 6184 | -3030 |
| TOTAL PROJECT | 14641 | 10982 | | 10982 | 22394 | -11412 |

SEE SPECIAL PROVISIONS FOR FURNISHED EXCAVATION
* AVAILABLE EXCAVATION = EXC. x SHRINKAGE FACTOR x % USED

## GUARD RAIL

| LOCATION | TRAFFIC BARRIER TERM. TYPE 1 SPECIAL (TANGENT) | TRAFFIC BARRIER TERM. TYPE 5A | TERMINAL MARKER DIRECT APPLIED | GUARDRAIL REFLECTORS |
|---|---|---|---|---|
| | EACH | EACH | EACH | EACH |
| LT. STA. 79+98.34 TO LT. STA. 81+77.74 | | | | 3 |
| LT. STA. 79+98.34 | | | 1 | |
| LT. STA. 79+98.34 TO LT. STA. 80+48.34 | 1 | | | |
| LT. STA. 80+48.34 TO LT. STA. 80+61.59 | | 1 | | |
| RT. STA. 80+22.78 TO RT. STA. 81+99.49 | | | | 3 |
| RT. STA. 80+22.78 | | | 1 | |
| RT. STA. 80+22.78 TO RT. STA. 80+72.78 | 1 | | | |
| RT. STA. 80+72.78 TO RT. STA. 80+86.03 | | 1 | | |
| LT. STA. 81+14.49 TO LT. STA. 81+27.74 | | 1 | | |
| LT. STA. 81+27.74 TO LT. STA. 81+77.74 | 1 | | | |
| LT. STA. 81+77.74 | | | 1 | |
| RT. STA. 81+36.24 TO RT. STA. 81+49.49 | | 1 | | |
| RT. STA. 81+49.49 TO RT. STA. 81+99.49 | 1 | | | |
| RT. STA. 81+99.49 | | | 1 | |
| TOTAL | 4 | 4 | 4 | 6 |

## SIDEWALK REMOVAL & REPLACEMENT

| LOCATION | SQ FT |
|---|---|
| EAST PLEASANT HILL ROAD ℄ | |
| RT STA 15+10 (6X4) | 24 |
| TOTAL | 24 |

## COMBINATION CURB & GUTTER REMOVAL

| LOCATION | FOOT |
|---|---|
| EAST PLEASANT HILL ROAD ℄ | |
| LT STA 12+36 TO 13+00 | 64 |
| RT STA 12+36 TO 13+00 | 64 |
| TOTAL | 128 |


HLR
Rice, Berry and Associates
A Division of Hampton, Lenzini and Renwick, Inc.
Civil & Structural Engineers
801 S. Durkin Drive
Springfield, Illinois 62704
217-546-3400


Account Number 03-47-0001-1
Date: 03-20-07
DESIGNED: L.F.S. | CHECKED: S.W.M. | DRAWN: T.W.K.

# QUANTITY SCHEDULES

**SECTION 99-02118-00-FP**

**F.A.U. 9713 / EAST PLEASANT HILL ROAD**

**JACKSON COUNTY**

DATE: 20-Mar-07 10:56
FILE: P:\03\0347000I\Cad\Phase II\plans\4700Irdw.dgn

## TREE REMOVAL 1

| LOCATION | TREE REMOVAL (6 TO 15 UNITS DIA.) | TREE REMOVAL (OVER 15 UNITS DIA.) |
|---|---|---|
| STATION/OFFSET | | |
| 12+97.48 22 LT | 6 | |
| 12+97.48 22 LT | 6 | |
| 15+04.30 20 LT | 14 | |
| 15+16.20 20 LT | 12 | |
| 15+16.20 20 LT | 12 | |
| 15+64.21 20 LT | | 16 |
| 15+76.61 20 LT | 14 | |
| 15+87.52 20 LT | 14 | |
| 15+99.98 20 LT | 14 | |
| 16+12.28 19 LT | | 18 |
| 16+67.35 18 RT | | 18 |
| 17+17.67 22 RT | | 30 |
| 17+48.31 21 LT | 14 | |
| 17+59.18 22 RT | | 30 |
| 19+24.02 25 LT | 12 | |
| 19+62.23 21 LT | | 18 |
| 19+98.42 21 LT | | 18 |
| 20+10.17 20 LT | 14 | |
| 22+24.20 24 RT | | 24 |
| 26+85.69 18 RT | 12 | |
| 26+88.21 18 RT | | 16 |
| 27+06.07 18 RT | | 16 |
| 27+82.46 22 RT | 12 | |
| 27+83.13 18 RT | | 24 |
| 37+57.00 32 RT | 12 | |
| 37+65.17 23 RT | 12 | |
| 37+71.10 21 RT | | 16 |
| 37+76.39 27 RT | 8 | |
| 37+83.84 24 RT | 10 | |
| 37+83.84 24 RT | 10 | |
| 37+86.13 25 LT | 6 | |
| 37+97.96 26 LT | 8 | |
| 38+09.92 25 LT | 6 | |
| 38+19.06 32 RT | | 20 |
| 38+19.41 34 RT | 12 | |
| 38+41.12 25 RT | | 28 |
| 39+03.85 26 LT | 6 | |
| 39+10.47 24 LT | 6 | |
| 39+24.68 24 LT | 6 | |
| 39+53.03 27 LT | 12 | |
| 40+51.57 18 RT | 10 | |
| 40+51.57 18 RT | 10 | |
| 40+51.57 18 RT | 10 | |
| 40+53.17 20 RT | 6 | |
| 40+57.37 20 RT | 6 | |
| 40+57.37 20 RT | 6 | |
| 40+57.37 20 RT | 6 | |
| 40+57.37 20 RT | 6 | |
| 40+57.37 20 RT | 6 | |
| 40+58.84 20 RT | 6 | |
| 40+60.88 21 RT | 12 | |
| 40+61.27 17 RT | 12 | |
| 40+61.27 17 RT | 12 | |
| 40+64.39 19 RT | 6 | |
| 40+67.13 19 RT | 14 | |
| 40+78.84 20 RT | 6 | |
| 41+85.80 22 RT | 10 | |
| 41+88.78 27 RT | 10 | |
| 42+02.04 30 RT | 12 | |
| 42+02.53 21 RT | | 30 |
| 42+23.96 33 RT | | 18 |
| 42+38.25 22 RT | 12 | |
| 42+40.51 22 RT | 12 | |
| 42+81.38 28 RT | | 42 |
| 43+33.10 30 RT | | 25 |
| 49+84.63 39 RT | | 16 |
| 50+05.90 31 RT | | 18 |
| 50+34.87 29 RT | 12 | |
| 51+61.81 38 LT | | 16 |
| 51+61.81 38 LT | | 16 |
| 51+79.74 48 LT | | 18 |
| 52+59.89 18 LT | | 20 |
| 53+99.20 18 LT | | 18 |
| 53+99.20 18 LT | | 18 |
| 54+48.33 18 LT | 6 | |
| 54+70.02 17 LT | 6 | |
| 54+81.00 22 RT | | 18 |
| 54+81.00 22 RT | | 18 |
| SUB TOTAL 1 | 484 | 583 |

## TREE REMOVAL 2

| LOCATION | TREE REMOVAL (6 TO 15 UNITS DIA.) | TREE REMOVAL (OVER 15 UNITS DIA.) |
|---|---|---|
| STATION/OFFSET | | |
| 54+81.00 22 RT | | 18 |
| 54+83.21 18 LT | 12 | |
| 54+83.21 18 LT | 12 | |
| 55+32.89 17 LT | 10 | |
| 55+33.87 22 RT | 8 | |
| 55+36.39 21 RT | | 16 |
| 55+92.45 22 RT | 6 | |
| 55+92.45 22 RT | 6 | |
| 55+92.45 22 RT | 6 | |
| 55+97.66 22 RT | 10 | |
| 55+97.66 22 RT | 10 | |
| 55+97.66 22 RT | 10 | |
| 56+04.68 23 RT | 8 | |
| 56+08.27 22 RT | 8 | |
| 56+08.27 22 RT | 8 | |
| 56+16.59 22 RT | 6 | |
| 56+16.59 22 RT | 6 | |
| 56+16.59 22 RT | 6 | |
| 56+16.59 22 RT | 6 | |
| 56+16.59 22 RT | 6 | |
| 56+25.69 22 RT | 6 | |
| 56+25.69 22 RT | 6 | |
| 56+25.69 22 RT | 6 | |
| 56+25.69 22 RT | 6 | |
| 56+25.69 22 RT | 6 | |
| 56+30.52 22 RT | 6 | |
| 56+30.52 22 RT | 6 | |
| 56+42.87 23 RT | 8 | |
| 56+42.87 23 RT | 8 | |
| 56+46.44 22 RT | 10 | |
| 56+59.20 23 RT | 6 | |
| 56+59.20 23 RT | 6 | |
| 56+59.20 23 RT | 6 | |
| 56+59.20 23 RT | 6 | |
| 56+63.50 21 RT | 10 | |
| 56+67.47 22 RT | 8 | |
| 56+67.47 22 RT | 8 | |
| 56+73.52 23 RT | 8 | |
| 56+73.52 23 RT | 8 | |
| 56+73.52 23 RT | 8 | |
| 56+73.52 23 RT | 8 | |
| 56+79.87 22 RT | 8 | |
| 56+88.88 21 RT | 6 | |
| 56+88.88 21 RT | 6 | |
| 56+95.99 23 RT | 10 | |
| 56+98.89 22 RT | 6 | |
| 56+98.89 22 RT | 6 | |
| 56+98.89 22 RT | 6 | |
| 56+98.89 22 RT | 6 | |
| 56+98.89 22 RT | 6 | |
| 57+09.74 22 RT | 10 | |
| 57+09.74 22 RT | 10 | |
| 57+22.43 18 LT | 8 | |
| 57+23.84 23 RT | 8 | |
| 57+23.84 23 RT | 8 | |
| 57+32.05 23 RT | 8 | |
| 57+34.48 22 RT | 14 | |
| 57+38.58 23 RT | 8 | |
| 57+38.58 23 RT | 8 | |
| 57+42.60 21 RT | 8 | |
| 57+42.60 21 RT | 8 | |
| 57+47.62 21 RT | 8 | |
| 57+47.62 21 RT | 8 | |
| 57+56.34 23 RT | 8 | |
| 57+56.34 23 RT | 8 | |
| 57+56.34 23 RT | 8 | |
| 57+70.28 22 RT | 8 | |
| 57+70.28 22 RT | 8 | |
| 57+70.28 22 RT | 8 | |
| 57+70.28 22 RT | 8 | |
| 57+70.28 22 RT | 8 | |
| 57+80.69 22 RT | 12 | |
| 57+80.69 22 RT | 12 | |
| 57+89.74 21 RT | 8 | |
| 57+89.74 21 RT | 8 | |
| 57+89.74 21 RT | 8 | |
| 57+99.78 21 RT | 8 | |
| 57+99.78 21 RT | 8 | |
| 58+10.21 19 RT | 8 | |
| 58+10.21 19 RT | 8 | |
| SUB TOTAL 2 | 598 | 34 |

## TREE REMOVAL 3

| LOCATION | TREE REMOVAL (6 TO 15 UNITS DIA.) | TREE REMOVAL (OVER 15 UNITS DIA.) |
|---|---|---|
| STATION/OFFSET | | |
| 58+10.21 19 RT | 8 | |
| 58+23.05 19 RT | 10 | |
| 58+36.63 20 RT | 6 | |
| 58+36.63 20 RT | 6 | |
| 58+58.34 18 RT | | 24 |
| 58+58.34 18 RT | | 24 |
| 58+65.92 21 RT | 8 | |
| 58+79.51 20 RT | 8 | |
| 58+83.85 20 RT | | 16 |
| 58+92.82 21 RT | | 16 |
| 58+96.20 20 RT | 10 | |
| 59+10.60 21 RT | | 20 |
| 59+22.17 21 RT | | 16 |
| 59+26.64 21 RT | 8 | |
| 59+38.84 19 RT | | 22 |
| 59+51.08 20 RT | | 16 |
| 59+51.08 20 RT | | 16 |
| 59+64.62 22 RT | 8 | |
| 59+71.76 20 RT | 10 | |
| 59+76.87 24 RT | 10 | |
| 59+89.81 21 RT | 10 | |
| 60+00.79 19 RT | 10 | |
| 60+00.79 19 RT | 10 | |
| 60+16.22 19 RT | | 30 |
| 60+39.06 20 RT | 12 | |
| 60+39.06 20 RT | 12 | |
| 60+49.65 20 RT | 10 | |
| 60+57.89 21 RT | | 16 |
| 60+74.22 21 RT | | 16 |
| 60+74.22 21 RT | | 16 |
| 60+74.22 21 RT | | 16 |
| 60+84.80 20 RT | | 18 |
| 60+89.98 21 RT | | 20 |
| 60+97.09 20 RT | 10 | |
| 61+11.51 20 RT | | 18 |
| 61+18.28 21 RT | 6 | |
| 61+18.28 21 RT | 6 | |
| 61+18.28 21 RT | 6 | |
| 61+23.56 21 RT | 12 | |
| 61+26.67 20 RT | | 24 |
| 61+29.62 21 RT | 12 | |
| 61+40.03 19 RT | 12 | |
| 61+40.03 19 RT | 12 | |
| 61+40.03 19 RT | 12 | |
| 61+56.01 22 RT | 10 | |
| 61+58.33 21 RT | 10 | |
| 61+61.55 23 RT | | 18 |
| 61+60.55 20 LT | | 16 |
| 61+83.10 23 RT | | 18 |
| 61+86.73 21 RT | | 24 |
| 62+06.10 20 RT | 12 | |
| 62+15.79 19 RT | 8 | |
| 62+23.22 20 RT | 8 | |
| 62+23.22 20 RT | 8 | |
| 62+38.74 20 RT | 8 | |
| 62+77.69 19 RT | | 16 |
| 62+77.69 19 RT | | 16 |
| 62+77.69 19 RT | | 16 |
| 62+77.69 19 RT | | 16 |
| 63+37.30 20 RT | | 24 |
| 63+56.40 20 RT | 10 | |
| 63+65.03 21 RT | 8 | |
| 63+65.03 21 RT | 8 | |
| 63+74.81 21 RT | 12 | |
| 63+89.22 21 RT | | 18 |
| 64+06.10 20 RT | | 18 |
| 64+12.37 21 RT | 8 | |
| 64+20.35 20 RT | 14 | |
| 64+24.67 24 RT | 8 | |
| 64+30.36 21 RT | 10 | |
| 64+30.36 21 RT | 10 | |
| 64+30.36 21 RT | 10 | |
| 64+39.18 21 RT | 8 | |
| 64+39.18 21 RT | 8 | |
| 64+47.89 22 RT | 8 | |
| 64+55.45 21 RT | 10 | |
| 64+61.57 21 RT | 12 | |
| 64+70.67 21 RT | 8 | |
| 64+70.67 21 RT | 8 | |
| SUB TOTAL 3 | 468 | 544 |

| ROUTE NO. | SECTION | COUNTY | TOTAL SHEETS | SHEET NO. |
|---|---|---|---|---|
| FAU 9713 | 99-02118-00-FP | JACKSON | 122 | 7 |
| FED. ROAD DIST. NO. | | ILLINOIS | FED. AID PROJECT- | |

CONTRACT NO. 99219

## TREE REMOVAL 4

| LOCATION | TREE REMOVAL (6 TO 15 UNITS DIA.) | TREE REMOVAL (OVER 15 UNITS DIA.) |
|---|---|---|
| STATION/OFFSET | | |
| 64+85.28 21 RT | 8 | |
| 64+85.28 21 RT | 8 | |
| 64+99.38 21 RT | | 28 |
| 65+07.03 23 RT | | 16 |
| 65+10.10 21 RT | 10 | |
| 66+08.55 26 RT | | 48 |
| 66+57.19 34 RT | 12 | |
| 67+47.27 18 RT | 6 | |
| 67+47.27 18 RT | 6 | |
| 67+54.90 18 RT | 6 | |
| 67+54.90 18 RT | 6 | |
| 67+60.15 18 RT | 12 | |
| 67+60.89 25 RT | | 30 |
| 67+72.45 20 RT | 10 | |
| 67+76.47 20 RT | 6 | |
| 67+80.34 22 RT | 10 | |
| 67+92.11 19 RT | 8 | |
| 67+98.13 26 RT | 8 | |
| 67+98.13 26 RT | 8 | |
| 67+99.98 20 RT | 8 | |
| 67+99.98 20 RT | 8 | |
| 68+08.97 21 RT | 8 | |
| 68+24.10 26 RT | | 36 |
| 68+42.57 26 RT | 12 | |
| 68+46.71 20 RT | 8 | |
| 68+48.45 26 RT | 12 | |
| 68+53.29 23 RT | 8 | |
| 68+61.72 21 RT | 8 | |
| 68+66.51 25 RT | 10 | |
| 68+70.77 25 RT | 12 | |
| 68+85.76 25 RT | | 36 |
| 69+03.50 25 RT | 8 | |
| 69+16.40 21 RT | 6 | |
| 69+19.31 21 RT | 10 | |
| 69+25.10 20 RT | 8 | |
| 69+25.10 20 RT | 8 | |
| 69+25.10 20 RT | 8 | |
| 69+25.10 20 RT | 8 | |
| 69+29.29 21 RT | 8 | |
| 69+33.36 19 RT | 6 | |
| 69+33.36 19 RT | 6 | |
| 69+33.36 19 RT | 6 | |
| 69+40.62 21 RT | 10 | |
| 69+73.52 20 RT | 12 | |
| 69+76.88 20 RT | 8 | |
| 69+76.88 20 RT | 8 | |
| 69+81.86 21 RT | 12 | |
| 69+94.85 22 RT | 12 | |
| 70+00.42 21 RT | 12 | |
| 70+04.78 19 RT | | 18 |
| SUB TOTAL 4 | 374 | 212 |
| SUB TOTAL 1 | 484 | 583 |
| SUB TOTAL 2 | 598 | 34 |
| SUB TOTAL 3 | 468 | 544 |
| TOTAL | 1,924 | 1,373 |


Rice, Berry and Associates
A Division of Hampton, Lenzini and Renwick, Inc.
Civil & Structural Engineers
801 S. Durkin Drive
Springfield, Illinois 62704
217-546-3400


Account Number 03-47-0001-1

Date: 03-19-07

DESIGNED: L.F.S. | CHECKED: M.G.B. | DRAWN: TWK

# TREE REMOVAL SCHEDULE

**SECTION 99-02118-00-FP**

**F.A.U. 9713 / EAST PLEASANT HILL ROAD**

**JACKSON COUNTY**

| ROUTE NO. | SECTION | COUNTY | TOTAL SHEETS | SHEET NO. |
|---|---|---|---|---|
| FAU 9713 | 99-02118-00-FP | JACKSON | 122 | 8 |
| FED. ROAD DIST. NO. | | ILLINOIS | FED. AID PROJECT- | |

CONTRACT NO. 99219

## CULVERT AND STORM SEWER SCHEDULE

| PIPE No. | LOCATION | STORM SEWER | | | | | | | STORM SEWER REMOVAL | END SECTIONS | | | | | | | TRENCH BACKFILL | C.L.S.M. BACKFILL | PIPE CULVERT | | | | BOX CULVERT REMOVAL |
|---|---|---|---|---|---|---|---|---|---|---|---|---|---|---|---|---|---|---|---|---|---|---|---|
| | | CLASS III TYPE 2 | | | CLASS IV TYPE 1 | | | | | PRECAST REINFORCED CONCRETE FLARED | | | | | STEEL | | | | TYPE 2 RCCP | TYPE 2 RCCP | TYPE 1 CS/A | | |
| | | 12" | 15" | 18" | 12" | 15" | 18" | 24" | 12" | 12" | 15" | 18" | 24" | 30" | 15" | 30" | | | 24" | 30" | 15" | 30" | |
| | EAST PLEASANT HILL ℄ | FT | FT | FT | FT | FT | FT | FT | FT | EACH | EACH | EACH | EACH | EACH | EACH | EACH | CU YD | CU YD | FT | FT | FT | FT | FT |
| 1 | SN. 1 TO SN. 1.1 | | | | 28 | | | | 28 | | | | | | | | 3.7 | | | | | | |
| 2 | SN. 1 TO SN. 2 | | 244 | | | | | | | | | | | | | | 256.9 | | | | | | |
| 3 | SN. 2 TO SN. 2.1 | | | | 40 | | | | | | | | | | | | 9.4 | | | | | | |
| 4 | SN. 2 TO SN. 3 | | 155 | | | | | | | | | | | | | | 104.8 | | | | | | |
| 5 | SN. 3.3 TO SN. 3.4 | | | | 31 | | | | | | | | | | | | 5.4 | | | | | | |
| 6 | SN. 3.2 TO SN. 3.1 | | | | 31 | | | | | | | | | | | | 5.4 | | | | | | |
| 7 | SN. 3.1 TO SN. 3.4 | | | | | 28 | | | | | | | | | | | 4.7 | | | | | | |
| 8 | SN. 3 TO SN. 3.1 | | | | | 4 | | | | | | | | | | | 1.3 | | | | | | |
| 9 | SN. 3 TO SN. 4 | 102 | | | | | | | | | | | | | | | 24.1 | | | | | | |
| 10 | SN. 3.4 TO SN. 3.7 | | | | 31 | | | | | | | | | | | | 4.7 | | | | | | |
| 11 | SN. 4 TO SN. 5 | | | | 254 | | | | | | | | | | | | 65.3 | | | | | | |
| 12 | SN. 6 TO SN. 6.1 | | | | 28 | | | | | | | | | | | | 4.8 | | | | | | |
| 13 | SN. 3.4 TO SN. 3.5 | | | | | 6 | | | | | | | | | | | 1.7 | | | | | | |
| 15 | SN. 5 TO SN. 6 | | | | 14 | | | | | | | | | | | | 5.4 | | | | | | |
| 97 | SN. 3.1 TO SN. 3.6 | | | | 31 | | | | | | | | | | | | 4.7 | | | | | | |
| | SN. 10 TO SN. PRCFES | | | | | | | | | | 1 | | | | | | 0.7 | | | | | | |
| 21 | SN. 10 TO SN. 10.1 | | | | | 28 | | | | | | | | | | | 7.9 | | | | | | |
| 22 | SN. 10 TO SN. 11 | | | | 23 | | | | | | | | | | | | 3 | | | | | | |
| 23 | SN. 11 TO SN. 12 | | | | 23 | | | | | | | | | | | | 3 | | | | | | |
| 24 | SN. 10.1 TO SN. 10.2 | | | | 23 | | | | | | | | | | | | 3 | | | | | | |
| 25 | SN. 10.2 TO SN. 10.3 | | | | 23 | | | | | | | | | | | | 3 | | | | | | |
| 30 | SN. 20 TO SN. PRCFES | | | | | | 8 | | | | | 1 | | | | | 2.2 | | | | | | |
| 31 | SN. 20 TO SN. 20.1 | | | | 24 | | | | | | | | | | | | 3.2 | | | | | | |
| 32 | SN. 20.1 TO SN. 20.2 | | | | 25 | | | | | | | | | | | | 3.3 | | | | | | |
| 33 | SN. 20 TO SN. 21 | | | | | | 28 | | | | | | | | | | 10 | | | | | | |
| 34 | SN. 21 TO SN. 22 | | | | | | 2 | | | | | | | | | | 0.3 | | | | | | |
| 35 | SN. 21 TO SN. 21.1 | | | | 24 | | | | | | | | | | | | 3.2 | | | | | | |
| 36 | SN. 21.1 TO SN. 21.2 | | | | 25 | | | | | | | | | | | | 3.3 | | | | | | |
| 40 | SN. 30 TO SN. PRCFES | | | 16 | | | | | | | | 1 | | | | | 2.8 | | | | | | |
| 41 | SN. 30 TO SN. 30.1 | | | | 17 | | | | | | | | | | | | 2.2 | | | | | | |
| 42 | SN. 30.1 TO SN. 30.2 | | | | 18 | | | | | | | | | | | | 2.4 | | | | | | |
| 43 | SN. 30 TO SN. 31 | | | 28 | | | | | | | | | | | | | 26.3 | | | | | | |
| 44 | SN. 31 TO SN. 32 | | | 6 | | | | | | | | | | | | | 2.2 | | | | | | |
| 45 | SN. 31 TO SN. 31.1 | | | | 17 | | | | | | | | | | | | 2.2 | | | | | | |
| 46 | SN. 31.1 TO SN. 31.2 | | | | 18 | | | | | | | | | | | | 2.4 | | | | | | |
| 50 | SN. 40 TO SN. PRCFES | | | | | | | 12 | | | | | 1 | | | | 2.4 | | | | | | |
| 51 | SN. 40 TO SN. 41 | | | | | | | 28 | | | | | | | | | 6.6 | | | | | | |
| 52 | SN. 41 TO SN. 42 | | | | | | | 7 | | | | | | | | | 1.4 | | | | | | |
| 60 | SN. 50 TO SN. PRCFES | | | | | | | | | | | | | | | | 0 | | | | | | |
| 61 | SN. 51 TO SN. PRCFES | | | | 27 | | | | | 1 | | | | | | | 8.5 | | | | | | |
| 62 | SN. 51 TO SN. 52 | | | | 28 | | | | | | | | | | | | 3.7 | | | | | | |
| 71 | SN. 60 TO SN. 72 | 145 | | | | | | | | | | | | | | | 31.3 | | | | | | |
| 72 | SN. 60 TO SN. PRCFES S | | | | | | | | | | | | | 1 | | | | | | 8 | | | |
| 73 | SN. 60 TO SN. 61 | 27 | | | | | | | | | | | | | | | 4.3 | | | | | | |
| 74 | SN. 61 TO SN. 61.1 | | | | 17 | | | | | | | | | | | | 2.2 | | | | | | |
| 75 | SN. 61.1 TO SN. 61.2 | | | | 18 | | | | | | | | | | | | 2.4 | | | | | | |
| 76 | SN. 61TO SN. 62 | | | | 28 | | | | | | | | | | | | 3.7 | | | | | | |
| 77 | SN. 62 TO SN. 62.1 | | | | 17 | | | | | | | | | | | | 2.2 | | | | | | |
| 78 | SN. 62.1 TO SN. 62.2 | | | | 18 | | | | | | | | | | | | 2.4 | | | | | | |
| 79 | SN. 60 TO SN. PRCFES N | | | | | | | | | | | | | 1 | | | 55.4 | | | 63 | | | |
| | | | | | | | | | | | | | | | | | | | | | | | |
| 83 | SN. 72 TO EXIST TILE | | | | 15 | | | | | | | | | | | | | | | | | | |
| 84 | SN. 72.1 TO SN. 72 | | | | 64 | | | | | | | | | | | | 5.6 | | | | | | |
| 90 | SN. 80 TO SN. PRCFES N | | | | | 6 | | | | | 1 | | | | | | 2.1 | | | | | | |
| 91 | SN. 80 TO SN. 80.1 | | | | 18 | | | | | | | | | | | | 2.4 | | | | | | |
| 92 | SN. 80 TO SN. 80.2 | | | | 18 | | | | | | | | | | | | 2.4 | | | | | | |
| 93 | SN. 80 TO SN. 81 | | | | | 28 | | | | | | | | | | | 7.9 | | | | | | |
| 94 | SN. 81 TO SN. 81.1 | | | | 18 | | | | | | | | | | | | 2.4 | | | | | | |
| 95 | SN. 81 TO SN. 81.2 | | | | 18 | | | | | | | | | | | | 2.4 | | | | | | |
| 96 | SN. 81 TO SN. PRCFES N | | | | | 6 | | | | | 1 | | | | | | 1.4 | | | | | | |
| 100 | SN. 90 TO SN. PRCFES S | | | | 36 | | | | | 1 | | | | | | | 4.6 | | | | | | |
| 110 | SN. 100 TO SN. 100.1 | | | | 17 | | | | | | | | | | | | 2.2 | | | | | | |
| 111 | SN. 100 TO SN. 100.2 | | | | 17 | | | | | | | | | | | | 2.2 | | | | | | |
| 112 | SN. 100 TO SN. PRCFES S | | | | | | | 38 | | | | | 1 | | | | 6.1 | | | | | | |
| 113 | SN. 100 TO SN. PRCFES N | | | | | | | 8 | | | | | 1 | | | | 0.6 | | | | | | |
| 120 | SN. 110 TO SN. PRCFES S | | | | 36 | | | | | 1 | | | | | | | 4.6 | | | | | | |
| 130 | SN. 120 TO SN. PRCFES S | | | | 41 | | | | | 1 | | | | | | | 6.1 | | | | | | |
| 140 | SN. 125 TO SN. PRCFES S | | | | 44 | | | | | 1 | | | | | | | 10.3 | | | | | | |
| | CL STA 16+47 12" CONC | | | | | | | | | | | | | | | | | 10.00 | | | | | |
| | CL STA 20+09 15" CONC | | | | | | | | | | | | | | | | | 12.10 | | | | | |
| | CL STA 27+33 15" CONC | | | | | | | | | | | | | | | | | 10.40 | | | | | |
| | CL STA 33+04 12" CONC | | | | | | | | | | | | | | | | | 11.00 | | | | | |
| | RT STA 38+29 PE | | | | | | | | | | | | | | 2 | | | | | | 38 | | |
| | CL STA 38+48 15" CMP | | | | | | | | | | | | | | | | | 11.60 | | | | | |
| | CL STA 42+20 12" CONC | | | | | | | | | | | | | | | | | | | | | | |
| | CL STA 49+38 30" CMP | | | | | | | | | | | | | | | | | | | | | | |
| | RT STA 50+57 PE | | | | | | | | | | | | | | | | | | | | | | |
| | CL STA 54+36 12" CONC | | | | | | | | | | | | | | | | | 14.20 | | | | | |
| | CL STA 62+28 18" CONC | | | | | | | | | | | | | | | | | 16.70 | | | | | |
| | RT STA 64+85 PE | | | | | | | | | | | | | | 2 | | | | | | 30 | | |
| | RT STA 66+38 PE | | | | | | | | | | | | | | 2 | | | | | | 34 | | |
| | RT STA 70+24 PE | | | | | | | | | | | | | | 2 | | | | | | 24 | | |
| | RT STA 72+55 PE | | | | | | | | | | | | | 2 | | | 65.6 | | | | | 22 | |
| | STA 82+70 AR | | | | | | | | | | | | 2 | | | | | | 115 | | | | |
| | AR STA 82+88.00 8' X 5' BOX | | | | | | | | | | | | | | | | | 217.8 | | | | | 42 |
| | WARREN ROAD ℄ | | | | | | | | | | | | | | | | | | | | | | |
| 80 | SN. 70 TO SN. 72 | | | | 57 | | | | | | | | | | | | 10.9 | | | | | | |
| 81 | SN. 70 TO SN. 71 | | | | 55 | | | | | | | | | | | | 15.1 | | | | | | |
| | TOTAL | 274 | 399 | 50 | 1355 | 106 | 38 | 93 | 28 | 5 | 3 | 2 | 5 | 2 | 8 | 2 | 870.3 | 303.8 | 115 | 71 | 126 | 22 | 42 |

### PIPE CULVERT REMOVAL

| LOCATION | FT |
|---|---|
| CL STA 16+47 12" CONC | 30 |
| CL STA 20+09 15" CONC | 31 |
| RT STA 25+51 PE 12" CONC | 24 |
| RT STA 26+40 PE 12" CONC | 24 |
| LT STA 26+69 PE 8" CONC | 25 |
| CL STA 27+33 15" CONC | 31 |
| RT STA 31+60 FE 12" CONC | 40 |
| CL STA 33+04 12" CONC | 33 |
| CL STA 38+48 15" CMP | 38 |
| CL STA 42+20 12" CONC | 37 |
| RT STA 43+69 PE 8" CONC | 26 |
| CL STA 49+38 30" CMP | 40 |
| RT STA 50+57 PE 12" CONC | 22 |
| CL STA 54+36 12" CONC | 32 |
| CL STA 62+28 18" CONC | 28 |
| TOTAL | 461 |


HLR

Rice, Berry and Associates
A Division of Hampton, Lenzini and Renwick, Inc.
Civil & Structural Engineers
801 S. Durkin Drive
Springfield, Illinois 62704
217-546-3400


Account Number 03-47-0001-1

Date: 03-19-07

DESIGNED: L.F.S. | CHECKED: S.W.M. | DRAWN: W.J.S.

# CULVERT AND STORM SEWER SCHEDULE

## SECTION 99-02118-00-FP

## F.A.U. 9713 / EAST PLEASANT HILL ROAD

## JACKSON COUNTY

| ROUTE NO. | SECTION | COUNTY | TOTAL SHEETS | SHEET NO. |
|---|---|---|---|---|
| FAU 9713 | 99-02118-00-FP | JACKSON | 122 | 9 |
| FED. ROAD DIST. NO. | | ILLINOIS | FED. AID PROJECT- | |

CONTRACT NO. 99219

## DRAINAGE STRUCTURE TABLE

| No. | STATION | OFFSET | MANHOLES (RESTRICTED DEPTH) TY A 4' TY 1 F & CL | TY 3V F & G | TY 8 G | TY 24 F & G | TY A 5' TY 1 F & CL | INLETS TYPE A TY 3V F & G | TY 8 G | T 24 F & G | TYPE B TY 1 F & CL | TY 3V F & G | TY 8 G | TY 24 F & G | REMOVE CATCH BASIN | TOP CASTING | TOP OF CURB OR EDGE OF PAV | INVERT | | |
|---|---|---|---|---|---|---|---|---|---|---|---|---|---|---|---|---|---|---|---|---|
| EAST PLEASANT HILL ROAD ℄ | | | EACH | EACH | EACH | EACH | EACH | EACH | EACH | EACH | EACH | EACH | EACH | EACH | EACH | ELEV. | ELEV. | ELEV. | ELEV. | ELEV. |
| 1 | 12+53.40 | LT | | 1 | | | | | | | | | | | 1 | | 471.66 EP | 463.87 W | 468.80 S | 468.00 E |
| 1.1 | 12+53.40 | RT | | | | | | 1 | | | | | | | 1 | | 471.66 EP | 469.10 N | | |
| 2 | 15+00.00 | LT | 1 | | | | | | | | | | | | | 477.00 TG | | 470.00 E, W | 473.00 S | |
| 2.1 | 15+00.00 | RT | | | | | | | 1 | | | | | | | 476.20 TG | | 473.20 N | | |
| 3 | 16+58.33 | LT | | | 1 | | | | | | | | | | | 474.00 TG | | 471.00 W | 471.00 S | 471.25 E |
| 3.1 | 16+58.33 | LT | | | | | | | | | | 1 | | | | | 476.32 TC | 471.5 N | 471.80 N | 472.65 E, W |
| 3.2 | 16+25.00 | LT | | | | | | | | 1 | | | | | | | 475.99 EP | 472.96 E | | |
| 3.3 | 16+25.00 | RT | | | | | | 1 | | | | | | | | | 476.37 TC | 472.96 E | | |
| 3.4 | 16+58.33 | RT | | | | | | | | | | 1 | | | | | 476.32 TC | 472.40 N, S | 472.65E W | |
| 3.5 | 16+58.33 | RT | | | | | | | 1 | | | | | | | 475.00 TG | | 472.50 N | | |
| 3.6 | 16+91.66 | LT | | | | | | 1 | | | | | | | | | 476.37 TC | 472.96 W | | |
| 3.7 | 16+91.66 | RT | | | | | | | | 1 | | | | | | | 475.99 EP | 472.96 W | | |
| 4 | 17+63.00 | LT | | | | | | | | | | | 1 | | | 474.50 TG | | 472.25 E | 472.25 W | |
| 5 | 20+20.00 | LT | | | | | | | | | 1 | | | | | 479.00 TG | | 474.75 W, SE | | |
| 6 | 20+33.00 | LT | | | | | | | | | | | | 1 | | | 479.06 EP | 475.00 S, NW | | |
| 6.1 | 20+33.00 | RT | | | | | | | | 1 | | | | | | | 479.06 EP | 476.00 N | | |
| | | | | | | | | | | | | | | | | | | | | |
| 10 | 27+23.40 | LT | | 1 | | | | | | | | | | | | | 479.78 TC | 476.00 NE, S | 476.45 E | |
| 10.1 | 27+23.40 | RT | | | | | | | | | | 1 | | | | | 479.78 TC | 476.20 N | 476.45 E | |
| 10.2 | 27+49.00 | RT | | | | | | | | | | 1 | | | | | 479.70 TC | 476.70 E, W | | |
| 10.3 | 27+75.00 | RT | | | | | | | | 1 | | | | | | | 479.40 EP | 476.90 W | | |
| 11 | 27+49.00 | LT | | | | | | | | | | 1 | | | | | 479.70 TC | 476.70 E, W | | |
| 12 | 27+75.00 | LT | | | | | | 1 | | | | | | | | | 479.78 TC | 476.95 W | | |
| | | | | | | | | | | | | | | | | | | | | |
| 20 | 32+83.34 | LT | | 1 | | | | | | | | | | | | | 472.17 TC | 467.20 NE | 468.50 S | 469.00 E |
| 20.1 | 33+10.34 | LT | | | | | | | | | | 1 | | | | | 472.12 TC | 469.70 E W | | |
| 20.2 | 33+37.34 | LT | | | | | | 1 | | | | | | | | | 472.17 TC | 469.90 W | | |
| 21 | 32+83.34 | RT | | 1 | | | | | | | | | | | | | 472.17 TC | 468.80 N, S | 469.50 E | |
| 21.1 | 33+10.34 | RT | | | | | | | | | | 1 | | | | | 472.12 TC | 469.70 E, W | | |
| 21.2 | 33+37.34 | RT | | | | | | 1 | | | | | | | | | 472.17 TC | 469.90 W | | |
| 22 | 32+83.34 | RT | | | | | | | 1 | | | | | | | 471.00 TG | | 469.00 N | | |
| | | | | | | | | | | | | | | | | | | | | |
| 30 | 38+63.43 | LT | | 1 | | | | | | | | | | | | | 465.81 TC | 462.37 E | 456.92 NW | 457.52 S |
| 30.1 | 38+83.43 | LT | | | | | | | | | | 1 | | | | | 465.76 TC | 462.46 E, W | | |
| 30.2 | 39+03.43 | LT | | | | | | 1 | | | | | | | | | 465.81 TC | 462.65 W | | |
| 31 | 38+63.43 | RT | | 1 | | | | | | | | | | | | | 465.81 TC | 462.37 E | 458.56 N | 458.56 S |
| 31.1 | 38+83.43 | RT | | | | | | | | | | 1 | | | | | 465.76 TC | 462.46 E, W | | |
| 31.2 | 39+03.43 | RT | | | | | | 1 | | | | | | | | | 465.81 TC | 462.65 W | | |
| 32 | 38+63.43 | RT | | | | | | | | | | | 1 | | | 461.50 TG | | 458.90 N | | |
| | | | | | | | | | | | | | | | | | | | | |
| 40 | 42+20.00 | LT | | | | 1 | | | | | | | | | | | 462.92 EP | 456.04 N | 458.54 N | |
| 41 | 42+20.00 | RT | | | | 1 | | | | | | | | | | | 462.92 EP | 458.68 S | 458.68 N | |
| 42 | 42+20.00 | RT | | | 1 | | | | | | | | | | | 461.00 TG | | 458.72 N | | |
| | | | | | | | | | | | | | | | | | | | | |
| | | | | | | | | | | | | | | | | | | | | |
| 51 | 46+50.00 | LT | | | | | | | | | | | | 1 | | | 435.74 EP | 431.06 S | 433.00 N | |
| 52 | 46+50.00 | RT | | | | | | | | 1 | | | | | | | 435.74 EP | 433.25 N | | |
| | | | | | | | | | | | | | | | | | | | | |
| 60 | 49+33.39 | RT | | | | | 1 | | | | | | | | | 426.00 TG | | 419.80 N, S | 421.51 E | 421.8 W |
| 61 | 49+03.81 | RT | | | | | | | | | | | | | | | 429.42 TC | 422.00 SE | 426.00 N | 426.28 W |
| 61.1 | 48+83.81 | RT | | 1 | | | | | | | | 1 | | | | | 429.37 TC | 426.38 W, E | | |
| 61.2 | 48+63.81 | RT | | | | | | 1 | | | | | | | | | 429.42 TC | 426.48 E | | |
| 62 | 49+03.81 | LT | | | | | | | | | | | | | | | 429.42 TC | 426.28 S, W | | |
| 62.1 | 48+83.81 | LT | | 1 | | | | | | | | 1 | | | | | 429.37 TC | 426.38 E, W | | |
| 62.2 | 48+63.81 | LT | | | | | | 1 | | | | | | | | | 429.42 TC | 426.48 E | | |
| | | | | | | | | | | | | | | | | | | | | |
| 72 | 50+83.00 | RT | | | 1 | | | | | | | | | | | 430.00 TG | | 427.5 W | 427.5 NE | 427.5 E |
| 72.1 | 51+50.00 | RT | | | | | | | 1 | | | | | | | 436.00 TG | | 434.25 W | | |
| | | | | | | | | | | | | | | | | | 434.73 TC | 429.73 N, S | 431.00 E, W | |
| 80 | 54+43.57 | LT | | 1 | | | | | | | | | | | | | 434.78 TC | 431.53 E | | |
| 80.1 | 54+23.24 | LT | | | | | | 1 | | | | | | | | | 434.78 TC | 431.53 W | | |
| 80.2 | 54+63.90 | LT | | | | | | 1 | | | | | | | | | 434.73 TC | 429.87 N, S | 431.00 E, W | |
| 81 | 54+43.57 | RT | | 1 | | | | | | | | | | | | | 434.78 TC | 431.53 E | | |
| 81.1 | 54+23.24 | RT | | | | | | 1 | | | | | | | | | 434.78 TC | 431.53 W | | |
| 81.2 | 54+63.90 | RT | | | | | | 1 | | | | | | | | | | | | |
| | | | | | | | | | | 1 | | | | | | | 425.75 EP | 423.13 S | | |
| 90 | 59+00.00 | LT | | | | | | | | | | | | | | | | | | |
| | | | | | | | | | | | | | | | | | 417.18 TC | 413.31 NW, S | 414.18 E, W | |
| 100 | 61+80.77 | LT | | 1 | | | | | | | | | | | | | 417.23 TC | 414.24 E | | |
| 100.1 | 61+61.77 | LT | | | | | | 1 | | | | | | | | | 417.23 TC | 414.24 W | | |
| 100.2 | 61+99.77 | LT | | | | | | 1 | | | | | | | | | | | | |
| | | | | | | | | | | | | | | | | | 418.47 TC | 415.47 S | | |
| 110 | 64+50.00 | LT | | | | | | 1 | | | | | | | | | | | | |
| | | | | | | | | | | 1 | | | | | | | 401.94 EP | 398.81 SE | | |
| 120 | 69+40.00 | LT | | | | | | | | | | | | | | | | | | |
| | | | | | | | | | | 1 | | | | | | | 396.29 EP | 392.69 S | | |
| 125 | 70+32.72 | LT | | | | | | | | | | | | | | | | | | |
| WARREN ROAD ℄ | | | | | | | | | | | | | | | | | | | | |
| | | | | | | | | | | | | | | | | | | | | |
| | | | | | | | | | | | | 1 | | | | | 435.58 TC | 431.58 SW, E | | |
| 70 | 300+26.90 | LT | | | | | | | | | | | | | | | 436.38 TC | 431.88 W | | |
| 71 | 300+26.90 | RT | | | | | | 1 | | | | | | | | | | | | |
| TOTAL | | | 1 | 11 | 3 | 2 | 1 | 18 | 4 | 8 | 1 | 12 | 2 | 2 | 2 | | | | | |


Rice, Berry and Associates
A Division of Hampton, Lenzini and Renwick, Inc.
Civil & Structural Engineers
801 S. Durkin Drive
Springfield, Illinois 62704
217-546-3400


Account Number 03-47-0001-1

Date: 03-20-07

DESIGNED: L.F.S. | CHECKED: S.W.M. | DRAWN: W.J.S.

# DRAINAGE STRUCTURE SCHEDULE

## SECTION 99-02118-00-FP

## F.A.U. 9713 / EAST PLEASANT HILL ROAD

## JACKSON COUNTY

| ROUTE NO. | SECTION | COUNTY | TOTAL SHEETS | SHEET NO. |
|---|---|---|---|---|
| FAU 9713 | 99-02118-00-FP | JACKSON | 122 | 10 |
| FED. ROAD DIST. NO. | | ILLINOIS | FED. AID PROJECT- | |

CONTRACT NO. 99219

## RIGHT-OF-WAY MARKER SCHEDULE

| LOCATION | No. | LOCATION | No. |
|---|---|---|---|
| EAST PLEASANT HILL ROAD | | EAST PLEASANT HILL ROAD | |
| 25.00 RT STA 12+97.83 | 1 | 45.00 RT STA 62+00.00 | 1 |
| 25.00 RT STA 13+91.47 | 1 | 20.00 LT STA 65+82.51 | 1 |
| 23.00 RT STA 16+92.25 | 1 | 45.00 RT STA 65+82.51 | 1 |
| 25.00 RT STA 16+92.12 | 1 | 20.00 LT STA 67+85.55 | 1 |
| 34.16 LT STA 18+84.59 | 1 | 45.00 RT STA 67+85.55 | 1 |
| 25.00 LT STA 18+83.77 | 1 | 14.43 LT STA 68+99.73 | 1 |
| 25.00 LT STA 20+40.00 | 1 | 20.00 LT STA 68+99.88 | 1 |
| 21.02 LT STA 20+40.00 | 1 | 25.00 LT STA 69+00.01 | 1 |
| 23.00 RT STA 23+00.00 | 1 | 45.00 RT STA 70+91.49 | 1 |
| 23.00 LT STA 23+87.18 | 1 | 25.00 LT STA 71+35.00 | 1 |
| 25.00 RT STA 25+99.22 | 1 | 30.00 LT STA 71+35.00 | 1 |
| 23.00 LT STA 32+80.00 | 1 | 45.00 RT STA 71+38.22 | 1 |
| 35.00 LT STA 32+80.00 | 1 | 50.00 RT STA 71+38.22 | 1 |
| 25.00 RT STA 33+00.00 | 1 | 50.00 RT STA 73+12.20 | 1 |
| 35.00 LT STA 33+10.00 | 1 | 40.00 LT STA 74+72.18 | 1 |
| 23.00 LT STA 33+10.00 | 1 | 50.00 RT STA 74+26.14 | 1 |
| 33.00 RT STA 35+55.33 | 1 | 70.00 LT STA 78+79.95 | 1 |
| 23.00 LT STA 37+23.75 | 1 | 56.57 LT STA 78+80.08 | 1 |
| 25.75 LT STA 37+23.94 | 1 | 50.00 RT STA 79+38.22 | 1 |
| 24.82 LT STA 38+40.00 | 1 | 60.00 RT STA 79+38.22 | 1 |
| 35.00 LT STA 38+40.00 | 1 | 70.00 LT STA 79+46.15 | 1 |
| 35.00 LT STA 38+70.00 | 1 | 60.00 RT STA 79+46.15 | 1 |
| 24.58 LT STA 38+70.00 | 1 | 70.00 LT STA 79+75.57 | 1 |
| 33.00 RT STA 39+20.46 | 1 | 60.00 RT STA 79+75.57 | 1 |
| 25.00 RT STA 39+20.87 | 1 | 60.00 RT STA 80+50.00 | 1 |
| 21.89 LT STA 42+05.00 | 1 | 85.00 RT STA 80+50.00 | 1 |
| 40.00 LT STA 42+05.00 | 1 | 70.00 LT STA 81+38.22 | 1 |
| 25.00 RT STA 42+10.00 | 1 | 85.00 RT STA 82+00.00 | 1 |
| 35.00 RT STA 42+10.00 | 1 | 92.17 RT STA 82+61.29 | 1 |
| 35.00 RT STA 42+30.00 | 1 | 130.00 RT STA 83+14.04 | 1 |
| 25.00 RT STA 42+30.00 | 1 | 70.00 LT STA 83+14.04 | 1 |
| 40.00 LT STA 42+35.00 | 1 | 137.49 RT STA 84+05.59 | 1 |
| 21.65 LT STA 42+35.00 | 1 | SUBTOTAL | 86 |
| 25.00 RT STA 43+00.00 | 1 | | |
| 20.00 LT STA 44+59.03 | 1 | | |
| 25.00 RT STA 45+00.00 | 1 | | |
| 20.00 LT STA 46+42.84 | 1 | | |
| 30.00 LT STA 46+43.52 | 1 | | |
| 30.00 LT STA 48+50.00 | 1 | | |
| 50.00 LT STA 48+50.00 | 1 | WARREN ROAD | |
| 32.48 RT STA 48+73.95 | 1 | 35.00 RT STA 301+00.00 | 1 |
| 55.00 RT STA 49+20.00 | 1 | 25.00 RT STA 302+00.00 | 1 |
| 55.00 RT STA 49+40.00 | 1 | 25.00 RT STA 303+50.00 | 1 |
| 33.00 RT STA 49+40.00 | 1 | 18.66 RT STA 303+75.00 | 1 |
| 33.00 RT STA 51+21.06 | 1 | SUBTOTAL | 4 |
| 20.00 RT STA 51+21.99 | 1 | | |
| 50.00 LT STA 51+22.93 | 1 | | |
| 35.00 LT STA 51+96.49 | 1 | GIANT CITY ROAD | |
| 20.00 RT STA 53+80.00 | 1 | 60.00 RT STA 93+92.12 | 1 |
| 33.00 RT STA 53+80.00 | 1 | 50.00 LT STA 95+00.00 | 1 |
| 28.00 LT STA 53+00.00 | 1 | 85.00 LT STA 95+00.00 | 1 |
| 33.00 RT STA 55+50.00 | 1 | 60.00 LT STA 96+25.00 | 1 |
| 40.00 RT STA 55+50.00 | 1 | 60.00 LT STA 96+25.00 | 1 |
| 40.00 RT STA 59+00.00 | 1 | SUBTOTAL | 5 |
| | | PROJECT TOTAL | 95 |


Rice, Berry and Associates
A Division of Hampton, Lenzini and Renwick, Inc.
Civil & Structural Engineers
801 S. Durkin Drive
Springfield, Illinois 62704
217-546-3400


Account Number
03-47-0001-1

Date: 03-19-07

DESIGNED: L.F.S. | CHECKED: S.W.M. | DRAWN: W.J.S.

# QUANTITY SCHEDULES

**SECTION 99-02118-00-FP**

**F.A.U. 9713 / EAST PLEASANT HILL ROAD**

**JACKSON COUNTY**

| ROUTE NO. | SECTION | COUNTY | TOTAL SHEETS | SHEET NO. |
|---|---|---|---|---|
| FAU 9713 | 99-02118 -00-FP | JACKSON | 122 | 11 |
| FED. ROAD DIST. NO. | | ILLINOIS | FED. AID PROJECT- | |

CONTRACT NO. 99219

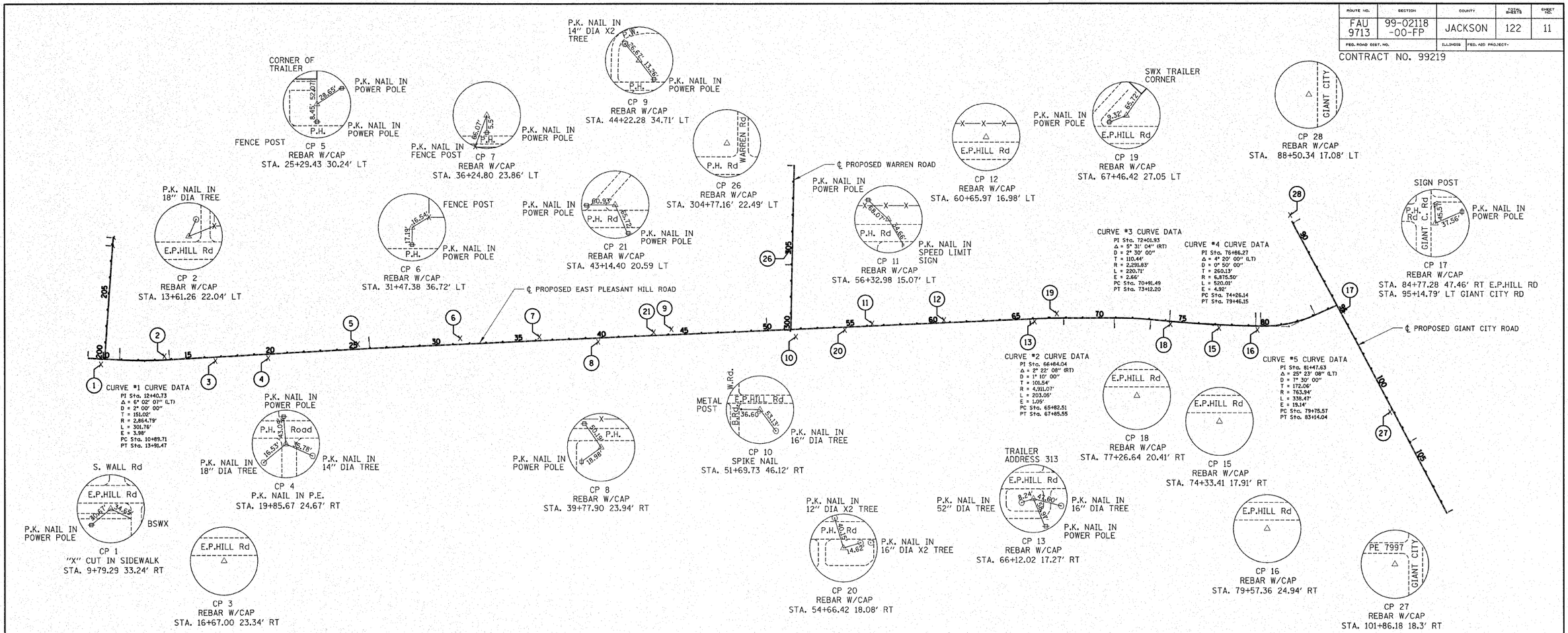


## CONTROL POINTS

| CNTRL PT. | LOC. FROM ℄ E. PLEASANT HILL Rd | NORTHING | EASTING |
|---|---|---|---|
| 1 | 33.24 RT 9+79.29 | 1951.6995 | 1617.5095 |
| 2 | 22.04 LT 13+61.26 | 2000.0000 | 2000.0000 |
| 3 | 23.34 RT 16+67.00 | 1970.8626 | 2307.5008 |
| 4 | 24.67 RT 19+85.67 | 1986.5869 | 2625.7909 |
| 5 | 30.24 LT 25+29.43 | 2070.5088 | 3165.8365 |
| 6 | 36.72 LT 31+47.38 | 2105.4676 | 3783.0839 |
| 7 | 23.86 LT 36+24.80 | 2114.1608 | 4260.6022 |
| 8 | 23.94 RT 39+77.90 | 2082.3477 | 4615.4971 |
| 9 | 34.71 LT 44+22.28 | 2160.9853 | 5056.783 |
| 10 | 46.12 RT 51+69.73 | 2113.9489 | 5807.1058 |
| 11 | 15.07 LT 56+32.98 | 2195.9224 | 6267.137 |
| 12 | 16.98 LT 60+65.97 | 2217.3105 | 6699.6062 |
| 13 | 17.27 RT 66+12.03 | 2207.5741 | 7246.5464 |
| 15 | 17.91 RT 74+33.41 | 2190.7939 | 8064.7444 |
| 16 | 24.94 RT 79+57.36 | 2155.6884 | 8589.0374 |
| 18 | 20.41 RT 77+26.64 | 2167.6597 | 8357.8679 |
| 19 | 27.05 LT 67+46.42 | 2255.2819 | 7379.9097 |
| 20 | 18.08 RT 54+66.42 | 2155.3111 | 6102.238 |
| 21 | 20.59 LT 43+14.40 | 2142.0205 | 4949.6482 |
| 29 | 25.49 RT 51+29.583 | 2132.755 | 5766.075 |
| | | | |
| | LOCATION FROM ℄ WARREN ROAD | | |
| 26 | 22.49 LT 304+77.16 | 2634.1172 | 5762.9389 |
| | | | |
| | LOCATION FROM ℄ GIANT CITY ROAD | | |
| 17 | 17.13 LT 95+14.59 | 2272.7445 | 9104.6342 |
| 27 | 18.30 RT 101+86.18 | 1662.9539 | 9388.2748 |
| 28 | 17.08 LT 88+50.34 | 2859.409 | 8793.1011 |

## HORIZONTAL ALIGNMENT

| POINT | NORTHING | EASTING |
|---|---|---|
| **EAST PLEASANT HILL ROAD** | | |
| POT STA. 9+00.24 | 1,988.9860 | 1,540.2900 |
| PI STA. 12+40.73 | 1,971.3537 | 1,880.3215 |
| PI STA. 25+99.43 | 2,044.0590 | 3,237.3530 |
| PI STA. 49+98.68 | 2,152.3260 | 5,634.1656 |
| PI STA. 66+84.04 | 2,228.1588 | 7,317.8196 |
| PI STA. 72+01.93 | 2,230.0573 | 7,835.7325 |
| PI STA. 76+86.27 | 2,185.2372 | 8,318.1608 |
| PI STA. 81+47.63 | 2,177.3873 | 8,779.7022 |
| POT STA. 84+57.16 | 2,307.6466 | 9,066.7083 |
| | | |
| **GIANT CITY ROAD** | | |
| POT STA. 89+00.00 | 2,807.5360 | 8,801.3030 |
| PI STA. 104+00.00 | 1,482.6860 | 9,504.7040 |
| POT STA. 108+80.00 | 1,058.7340 | 9,729.7920 |
| | | |
| **WARREN ROAD** | | |
| POT STA. 300+00.00 | 2,156.5310 | 5,776.6240 |
| PI STA. 304+00.62 | 2,557.0860 | 5,783.6910 |
| POT STA. 309+99.67 | 3,155.9840 | 5,797.2520 |

**B.M. D ~ RR SPIKE IN POWER POLE**
STA. 18+44.34 19.22 FT. LT.
ELEV. 479.115

**B.M. E ~ RR SPIKE IN POWER POLE**
STA. 28+56.98 22.33 FT. RT.
ELEV. 481.475

**B.M. F ~ RR SPIKE IN POWER POLE**
STA. 42+53.49 24.04 FT. LT.
ELEV. 460.245

**B.M. G ~ RR SPIKE IN POWER POLE**
STA. 51+16.48 26.63 FT. LT.
ELEV. 434.78

**B.M. H ~ RR SPIKE IN POWER POLE**
STA. 70+04.91 21.29 FT. LT.
ELEV. 388.33

**B.M. I ~ CHISELED "X" TOP OF S.E. HEADWALL**
STA. 95+68.48 32.30 FT. RT.
ELEV. 389.26

**LEGEND**

CONTROL POINT LOCATION


HLR
Rice, Berry and Associates
A Division of Hampton, Lenzini and Renwick, Inc.
Civil & Structural Engineers
801 S. Durkin Drive
Springfield, Illinois 62704
217-546-3400


Account Number 03-47-0001-1

Date: 09-21-06

DESIGNED: L.F.S. | CHECKED: S.W.M. | DRAWN: W.J.S.

# HORIZONTAL ALIGNMENT AND BENCH MARKS

## SECTION 99-02118-00-FP

## F.A.U. 9713 / EAST PLEASANT HILL ROAD

## JACKSON COUNTY

| ROUTE | SECTION | COUNTY | TOTAL SHEETS | SHEET NO. |
|---|---|---|---|---|
| FAU 9713 | 99-02118-00-FP | JACKSON | 122 | 12 |
| FED. ROAD DIST. NO. | | ILLINOIS | FED. AID PROJECT- | |

CONTRACT NO. 99219

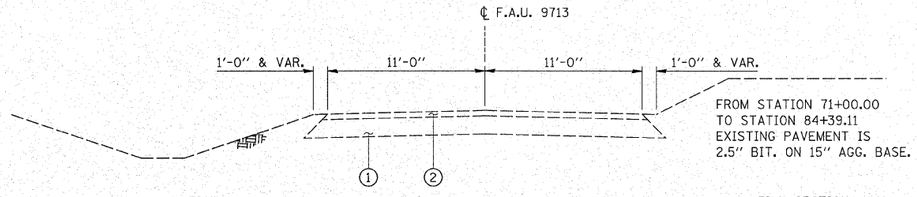


## EXISTING TYPICAL CROSS SECTION

F.A.U. 9713 (EAST PLEASANT HILL ROAD)
STA 12+36.00 TO STA. 84+39.13

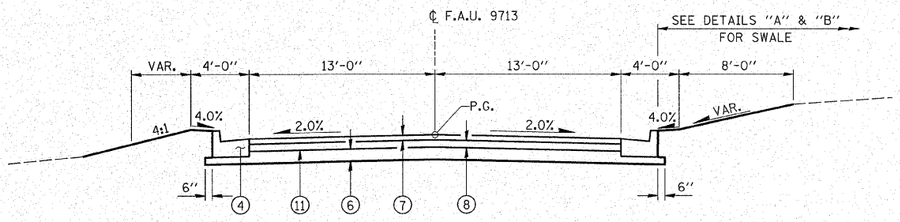


## PROPOSED TYPICAL CROSS SECTION

STA. 12+36.00 TO STA. 55+50.00 (EAST PLEASANT HILL ROAD)

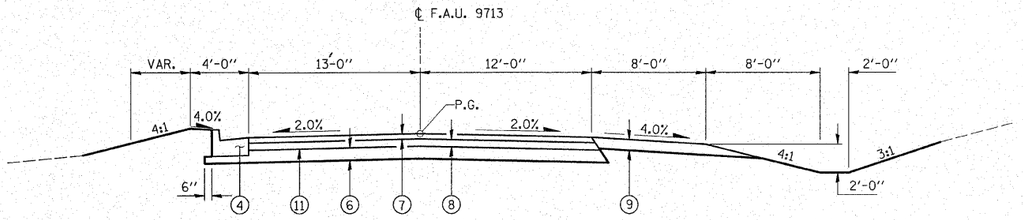


## PROPOSED TYPICAL CROSS SECTION

STA. 55+50.00 TO STA. 70+91.49 (EAST PLEASANT HILL ROAD)
STA. 73+12.20 TO STA. 74+58.00 (EAST PLEASANT HILL ROAD)

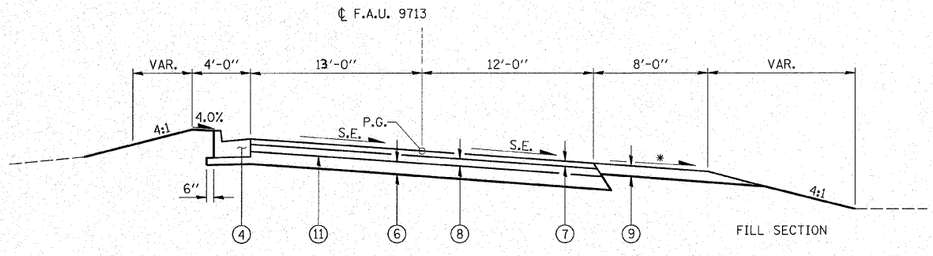


## PROPOSED TYPICAL CROSS SECTION

(SUPERELEVATION)
STA. 70+91.49 TO STA. 73+12.20 (EAST PLEASANT HILL ROAD)

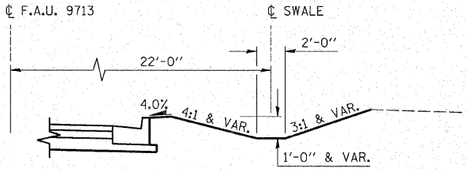


## DETAIL "A"

RT. STA. 13+70 TO STA. 16+60
RT. STA. 24+80 TO STA. 25+40

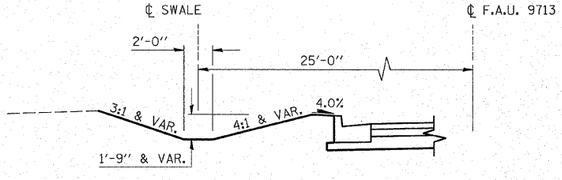


## DETAIL "B"

LT. STA. 17+30 TO STA. 17+80

### PAVEMENT DESIGN

EAST PLEASANT HILL ROAD
DESIGN PERIOD: 20 YEARS
STRUCTURAL DESIGN TRAFFIC (S.D.T.) = 5,420 YEAR 2015
P.V. = 97.44% S.U. = 2.20% M.U. = 0.37%
CLASS II ROAD
PERCENT OF S.D.T. IN DESIGN LANE P = 50 S = 50 M = 50
80,000 LB. LOAD LIMIT
DESIGN PER BLR MANUAL 37-3
MINIMUM SOIL SUPPORT: ERI = 2KSI
TRAFFIC FACTOR = 0.22

## LEGEND

1. EXISTING AGGREGATE BASE
2. EXISTING BITUMINOUS PAVEMENT
3. EXISTING BITUMINOUS AGGREGATE MIXTURE SHOULDER
4. COMBINATION CONCRETE CURB AND GUTTER, TYPE B-6.24
5. HOT-MIX ASPHALT BINDER COURSE, IL-19.0, N70 (2¼" THICKNESS)
6. AGGREGATE BASE COURSE, TYPE A (8" THICKNESS)
7. HOT-MIX ASPHALT SURFACE COURSE, MIX "D", N70 (2" THICKNESS)
8. HOT-MIX ASPHALT BINDER COURSE, IL-19.0, N70 (3¾" THICKNESS)
9. AGGREGATE SHOULDERS, TYPE A (6" THICKNESS)
11. BITUMINOUS MATERIALS (PRIME COAT)
13. AGGREGATE BASE COURSE, TYPE A (4" THICKNESS)
14. AGGREGATE (PRIME COAT)
16. HOT-MIX ASPHALT BASE COURSE, (8" THICKNESS)
18. HOT-MIX ASPHALT SHOULDER 6"
19. STRIP REFLECTIVE CRACK CONTROL
20. LEVELING BINDER (MACHINE METHED) N70 (VARIABLE DEPTH) (1¼" MIN)

BITUMINOUS CONCRETE SHOULDER REMOVAL (INCIDENTAL TO EARTH EXCAVATION)

* S.E. SLOPE OR 4.0% WHICHEVER IS GREATER

** ALGEBRAIC DIFFERENCE BETWEEN SHOULDER SLOPE AND SUPERELEVATION RATE NOT TO EXCEED 8.0% WITH A MAXIMUM SLOPE OF 4.0%


Rice, Berry and Associates
A Division of Hampton, Lenzini and Renwick, Inc.
Civil & Structural Engineers
801 S. Durkin Drive
Springfield, Illinois 62704
217-546-3400


Account Number
03-47-0001-1
Date: 10-10-06
DESIGNED: L.F.S. | CHECKED: S.W.M. | DRAWN: W.J.S.

# TYPICAL CROSS SECTIONS

**SECTION 99-02118-00-FP**

**F.A.U. 9713 / EAST PLEASANT HILL ROAD**

**JACKSON COUNTY**

| ROUTE | SECTION | COUNTY | TOTAL SHEETS | SHEET NO. |
|---|---|---|---|---|
| FAU 9713 | 99-02118-00-FP | JACKSON | 122 | 13 |
| FED. ROAD DIST. NO. | | ILLINOIS | FED. AID PROJECT- | |

CONTRACT NO. 99219

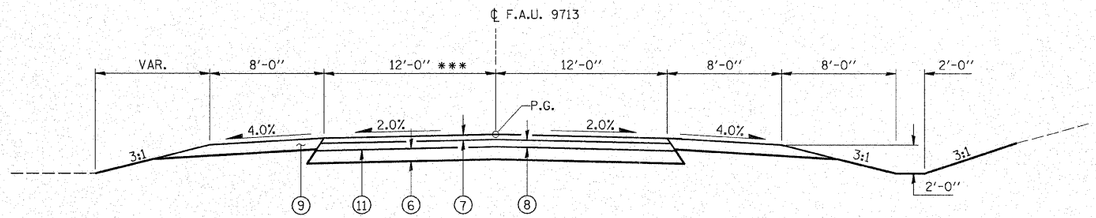


## PROPOSED TYPICAL CROSS SECTION

STA. 74+58.00 TO STA. 79+75.57 (EAST PLEASANT HILL ROAD)

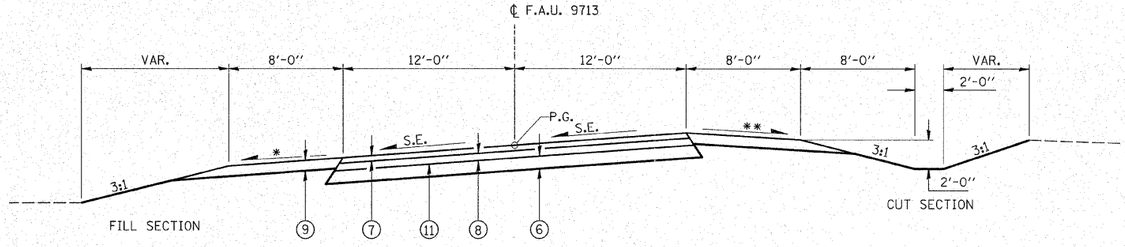


## PROPOSED TYPICAL CROSS SECTION

(SUPERELEVATION)

STA. 79+75.57 TO STA. 81+53.96 (EAST PLEASANT HILL ROAD)
(BRIDGE OMISSION STA. 80+69.29 TO STA. 81+20.71)

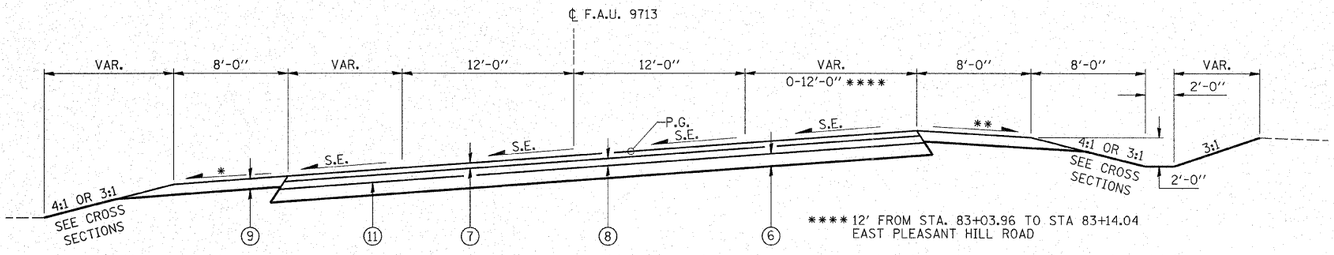


## PROPOSED TYPICAL CROSS SECTION

(SUPERELEVATION)

STA. 81+53.96 TO STA. 83+14.04 (EAST PLEASANT HILL ROAD)

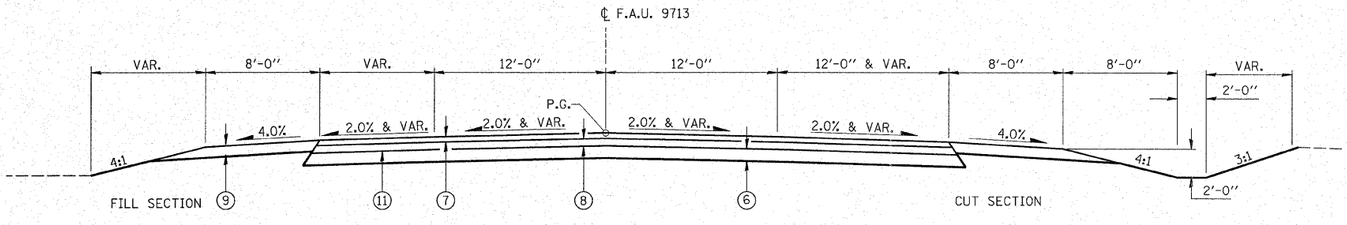


## PROPOSED TYPICAL CROSS SECTION

STA. 83+14.04 TO STA. 84+39.13 (EAST PLEASANT HILL ROAD)

## LEGEND

1. EXISTING AGGREGATE BASE
2. EXISTING BITUMINOUS PAVEMENT
3. EXISTING BITUMINOUS AGGREGATE MIXTURE SHOULDER
4. COMBINATION CONCRETE CURB AND GUTTER, TYPE B-6.24
5. HOT-MIX ASPHALT BINDER COURSE, IL-19.0, N70 (2¼" THICKNESS)
6. AGGREGATE BASE COURSE, TYPE A (8" THICKNESS)
7. HOT-MIX ASPHALT SURFACE COURSE, MIX "D", N70 (2" THICKNESS)
8. HOT-MIX ASPHALT BINDER COURSE, IL-19.0, N70 (3¾" THICKNESS)
9. AGGREGATE SHOULDERS, TYPE A (6" THICKNESS)
11. BITUMINOUS MATERIALS (PRIME COAT)
13. AGGREGATE BASE COURSE, TYPE A (4" THICKNESS)
14. AGGREGATE (PRIME COAT)
16. HOT-MIX ASPHALT BASE COURSE, (8" THICKNESS)
18. HOT-MIX ASPHALT SHOULDER 6"
19. STRIP REFLECTIVE CRACK CONTROL
20. LEVELING BINDER (MACHINE METHED) N70 (VARIABLE DEPTH) (1¼" MIN)

BITUMINOUS CONCRETE SHOULDER REMOVAL (INCIDENTAL TO EARTH EXCAVATION)

* S.E. SLOPE OR 4.0% WHICHEVER IS GREATER

** ALGEBRAIC DIFFERENCE BETWEEN SHOULDER SLOPE AND SUPERELEVATION RATE NOT TO EXCEED 8.0% WITH A MAXIMUM SLOPE OF 4.0%


Rice, Berry and Associates
A Division of Hampton, Lenzini and Renwick, Inc.
Civil & Structural Engineers
801 S. Durkin Drive
Springfield, Illinois 62704
217-546-3400


Account Number 03-47-0001-1

Date: 10-09-06

DESIGNED: L.F.S. | CHECKED: S.W.M. | DRAWN: W.J.S.

# TYPICAL CROSS SECTIONS

**SECTION 99-02118-00-FP**

**F.A.U. 9713 / EAST PLEASANT HILL ROAD**

**JACKSON COUNTY**

| ROUTE | SECTION | COUNTY | TOTAL SHEETS | SHEET NO. |
|---|---|---|---|---|
| FAU 9713 | 99-02118-00-FP | JACKSON | 122 | 14 |
| FED. ROAD DIST. NO. | | ILLINOIS | FED. AID PROJECT- | |

CONTRACT NO. 99219

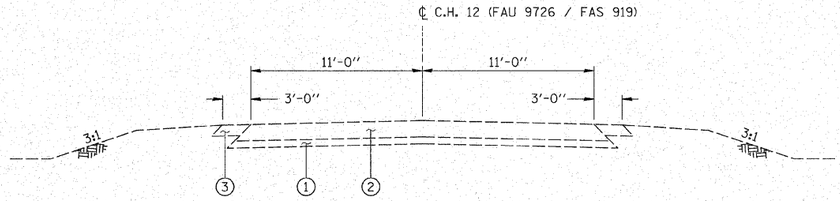


## EXISTING TYPICAL CROSS SECTION

C.H. 12 (GIANT CITY ROAD)

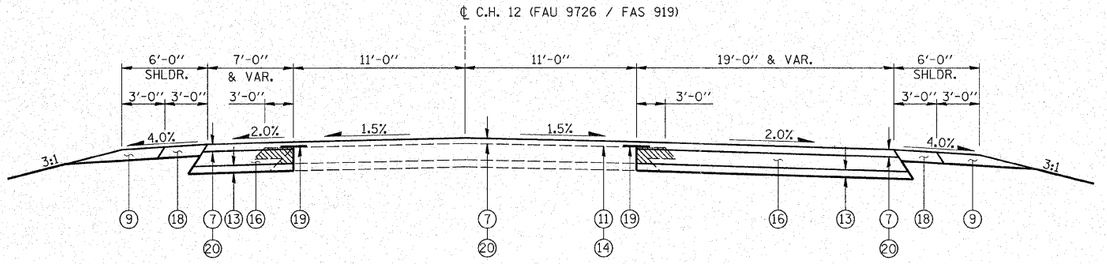


## PROPOSED TYPICAL CROSS SECTION

STA. 88+86.23 TO STA. 101+53.78 (GIANT CITY ROAD)

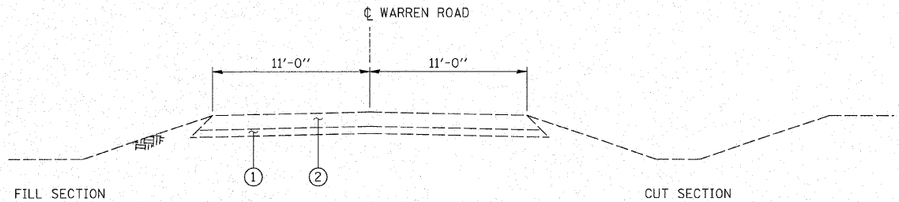


## EXISTING TYPICAL CROSS SECTION

(WARREN ROAD)

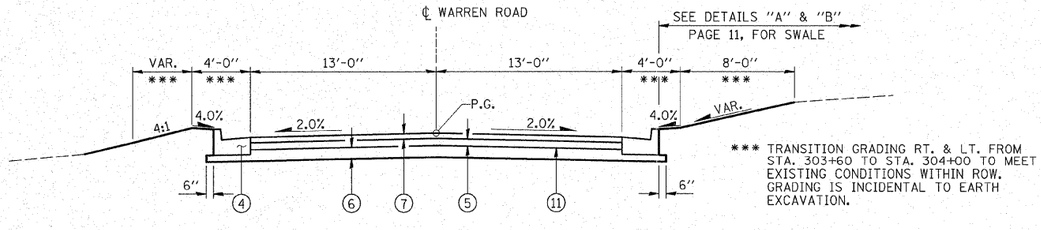


*** TRANSITION GRADING RT. & LT. FROM STA. 303+60 TO STA. 304+00 TO MEET EXISTING CONDITIONS WITHIN ROW. GRADING IS INCIDENTAL TO EARTH EXCAVATION.

## PROPOSED TYPICAL CROSS SECTION

STA. 300+15.24 TO STA. 303+60.00 (WARREN ROAD)

### PAVEMENT DESIGN

GIANT CITY ROAD
DESIGN PERIOD: 20 YEARS
STRUCTURAL DESIGN TRAFFIC (S.D.T.) = 8,863 YEAR 2015
P.V. = 96.86% S.U. = 2.46% M.U. = 0.68%
CLASS II ROAD
PERCENT OF S.D.T. IN DESIGN LANE P = 50 S = 50 M = 50
80,000 LB. LOAD LIMIT
DESIGN PER BLR MANUAL 37-8
MINIMUM SOIL SUPPORT: IBR = 2
TRAFFIC FACTOR = 0.49

### PAVEMENT DESIGN

WARREN ROAD
DESIGN PERIOD: 20 YEARS
STRUCTURAL DESIGN TRAFFIC (S.D.T.) = 2182 YEAR 2015
P.V. = 97% S.U. = 2% M.U. = 1%
CLASS II ROAD
PERCENT OF S.D.T. IN DESIGN LANE P = 50 S = 50 M = 50
73,280 LB. LOAD LIMIT
DESIGN PER BLR MANUAL 37-3
MINIMUM SOIL SUPPORT: ERI = 2KSI
TRAFFIC FACTOR = 0.11

## LEGEND

(1) EXISTING AGGREGATE BASE
(2) EXISTING BITUMINOUS PAVEMENT
(3) EXISTING BITUMINOUS AGGREGATE MIXTURE SHOULDER
(4) COMBINATION CONCRETE CURB AND GUTTER, TYPE B-6.24
(5) HOT-MIX ASPHALT BINDER COURSE, IL-19.0, N70 (2¼" THICKNESS)
(6) AGGREGATE BASE COURSE, TYPE A (8" THICKNESS)
(7) HOT-MIX ASPHALT SURFACE COURSE, MIX "D", N70 (2" THICKNESS)
(8) HOT-MIX ASPHALT BINDER COURSE, IL-19.0, N70 (3¾" THICKNESS)
(9) AGGREGATE SHOULDERS, TYPE A (6" THICKNESS)
(11) BITUMINOUS MATERIALS (PRIME COAT)
(13) AGGREGATE BASE COURSE, TYPE A (4" THICKNESS)
(14) AGGREGATE (PRIME COAT)
(16) HOT-MIX ASPHALT BASE COURSE, (8" THICKNESS)
(18) HOT-MIX ASPHALT SHOULDER 6"
(19) STRIP REFLECTIVE CRACK CONTROL
(20) LEVELING BINDER (MACHINE METHED) N70 (VARIABLE DEPTH) (1¼" MIN)

BITUMINOUS CONCRETE SHOULDER REMOVAL (INCIDENTAL TO EARTH EXCAVATION)

* S.E. SLOPE OR 4.0% WHICHEVER IS GREATER

** ALGEBRAIC DIFFERENCE BETWEEN SHOULDER SLOPE AND SUPERELEVATION RATE NOT TO EXCEED 8.0% WITH A MAXIMUM SLOPE OF 4.0%


Rice, Berry and Associates
A Division of Hampton, Lenzini and Renwick, Inc.
Civil & Structural Engineers
801 S. Durkin Drive
Springfield, Illinois 62704
217-546-3400


Account Number 03-47-0001-1
Date: 10-10-06
DESIGNED: L.F.S. | CHECKED: S.W.M. | DRAWN: W.J.S.

# TYPICAL CROSS SECTIONS

**SECTION 99-02118-00-FP**

**F.A.U. 9713 / EAST PLEASANT HILL ROAD**

**JACKSON COUNTY**

| ROUTE NO. | SECTION | COUNTY | TOTAL SHEETS | SHEET NO. |
|---|---|---|---|---|
| FAU 9713 | 99-02118 -00-FP | JACKSON | 122 | 15 |
| FED. ROAD DIST. NO. | | ILLINOIS | FED. AID PROJECT- | |

**CONTRACT NO. 99219**

| MIXTURE REQUIREMENTS | |
|---|---|
| LOCATION(S): | EAST PLEASANT HILL ROAD, GIANT CITY ROAD, WARREN ROAD |
| MIXTURE USE(S): | HOT-MIX ASPHALT SURFACE |
| AC/PG: | PG 64-22 |
| RAP % (MAX): | 10% |
| DESIGN AIR VOIDS: | 4% @ $N_{DES}$ 70 |
| MIXTURE COMPOSITION: (GRADATION MIXTURE): | IL 9.5 OR IL 12.5 |
| FRICTION AGGREGATE: | MIXTURE D |
| MIXTURE WEIGHTS | 112 LBS/SY/INCH THICKNESS |

| MIXTURE REQUIREMENTS | |
|---|---|
| LOCATION(S): | DRIVEWAYS |
| MIXTURE USE(S): | INCIDENTAL HOT-MIX ASPHALT SURFACING |
| AC/PG: | PG 64-22 |
| RAP % (MAX): | 15% |
| DESIGN AIR VOIDS: | 4% @ $N_{DES}$ 70 |
| MIXTURE COMPOSITION: (GRADATION MIXTURE): | IL 9.5 OR IL 12.5 |
| FRICTION AGGREGATE: | MIXTURE C |
| MIXTURE WEIGHTS | 112 LBS/SY/INCH THICKNESS |

| MIXTURE REQUIREMENTS | |
|---|---|
| LOCATION(S): | EAST PLEASANT HILL ROAD, GIANT CITY ROAD, WARREN ROAD |
| MIXTURE USE(S): | HOT-MIX ASPHALT BINDER COURSE |
| AC/PG: | PG 64-22 |
| RAP % (MAX): | 15% |
| DESIGN AIR VOIDS: | 4% @ $N_{DES}$ 70 |
| MIXTURE COMPOSITION: (GRADATION MIXTURE): | IL 19.0 |
| FRICTION AGGREGATE: | NONE |
| MIXTURE WEIGHTS | 112 LBS/SY/INCH THICKNESS |

| MIXTURE REQUIREMENTS | |
|---|---|
| LOCATION(S): | GIANT CITY ROAD |
| MIXTURE USE(S): | HOT-MIX ASPHALT BASE COURSE |
| AC/PG: | PG 58-22 |
| RAP % (MAX): | 25% |
| DESIGN AIR VOIDS: | 4% @ $N_{DES}$ 70 |
| MIXTURE COMPOSITION: (GRADATION MIXTURE): | IL 19.0 |
| FRICTION AGGREGATE: | NONE |
| MIXTURE WEIGHTS | 112 LBS/SY/INCH THICKNESS |

| MIXTURE REQUIREMENTS | |
|---|---|
| LOCATION(S): | GIANT CITY ROAD |
| MIXTURE USE(S): | LEVELING BINDER (MACHINE METHOD) |
| AC/PG: | PG 64-22 |
| RAP % (MAX): | 10% |
| DESIGN AIR VOIDS: | 4% @ $N_{DES}$ 70 |
| MIXTURE COMPOSITION: (GRADATION MIXTURE): | IL 9.5 OR IL 12.5 |
| FRICTION AGGREGATE: | NONE |
| MIXTURE WEIGHTS | 112 LBS/SY/INCH THICKNESS |

| MIXTURE REQUIREMENTS | |
|---|---|
| LOCATION(S): | GIANT CITY ROAD |
| MIXTURE USE(S): | HOT-MIX ASPHALT SHOULDERS (BOTTOM LIFT) |
| AC/PG: | PG 58-22 |
| RAP % (MAX): | 25% |
| DESIGN AIR VOIDS: | 4% @ $N_{DES}$ 70 |
| MIXTURE COMPOSITION: (GRADATION MIXTURE): | IL 19.0 |
| FRICTION AGGREGATE: | - |
| MIXTURE WEIGHTS | 112 LBS/SY/INCH THICKNESS |

| MIXTURE REQUIREMENTS | |
|---|---|
| LOCATION(S): | GIANT CITY ROAD |
| MIXTURE USE(S): | HOT-MIX ASPHALT SHOULDERS (TOP LIFT) |
| AC/PG: | PG 64-22 |
| RAP % (MAX): | 10% |
| DESIGN AIR VOIDS: | 4% @ $N_{DES}$ 70 |
| MIXTURE COMPOSITION: (GRADATION MIXTURE): | IL 9.5 OR IL 12.5 |
| FRICTION AGGREGATE: | MIXTURE D |
| MIXTURE WEIGHTS | 112 LBS/SY/INCH THICKNESS |

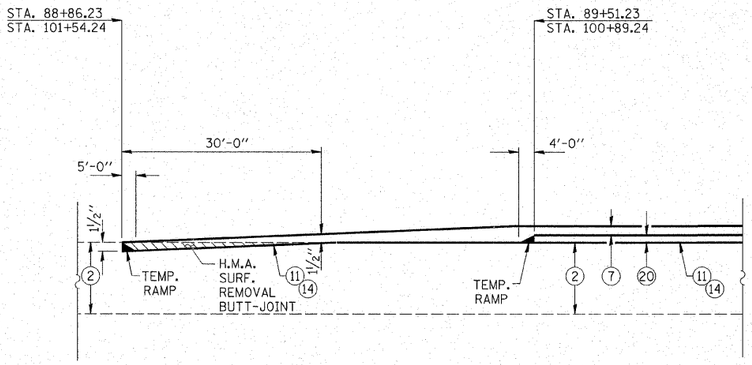


BUTT JOINT GIANT CITY ROAD DETAIL

## LEGEND

1. EXISTING AGGREGATE BASE
2. EXISTING BITUMINOUS PAVEMENT
3. EXISTING BITUMINOUS AGGREGATE MIXTURE SHOULDER
4. COMBINATION CONCRETE CURB AND GUTTER, TYPE B-6.24
5. HOT-MIX ASPHALT BINDER COURSE, IL-19.0, N70 (2¼" THICKNESS)
6. AGGREGATE BASE COURSE, TYPE A (8" THICKNESS)
7. HOT-MIX ASPHALT SURFACE COURSE, MIX "D", N70 (2" THICKNESS)
8. HOT-MIX ASPHALT BINDER COURSE, IL-19.0, N70 (3¾" THICKNESS)
9. AGGREGATE SHOULDERS, TYPE A (6" THICKNESS)
11. BITUMINOUS MATERIALS (PRIME COAT)
13. AGGREGATE BASE COURSE, TYPE A (4" THICKNESS)
14. AGGREGATE (PRIME COAT)
16. HOT-MIX ASPHALT BASE COURSE, (8" THICKNESS)
18. HOT-MIX ASPHALT SHOULDER 6"
19. STRIP REFLECTIVE CRACK CONTROL
20. LEVELING BINDER (MACHINE METHED) N70 (VARIABLE DEPTH) (1¼" MIN)

BITUMINOUS CONCRETE SHOULDER REMOVAL (INCIDENTAL TO EARTH EXCAVATION)

* S.E. SLOPE OR 4.0% WHICHEVER IS GREATER

** ALGEBRAIC DIFFERENCE BETWEEN SHOULDER SLOPE AND SUPERELEVATION RATE NOT TO EXCEED 8.0% WITH A MAXIMUM SLOPE OF 4.0%


HLR

Rice, Berry and Associates
A Division of Hampton, Lenzini and Renwick, Inc.
Civil & Structural Engineers
801 S. Durkin Drive
Springfield, Illinois 62704
217-546-3400


Account Number 03-47-0001-1

Date: 10-09-06

DESIGNED: L.F.S. | CHECKED: S.W.M. | DRAWN: W.J.S.

# MIXTURE REQUIREMENTS

**SECTION 99-02118-00-FP**

**F.A.U. 9713 / EAST PLEASANT HILL ROAD**

**JACKSON COUNTY**

| FAU | SECTION | COUNTY | TOTAL SHEETS | SHEET NO. |
|---|---|---|---|---|
| 9713 | 99-02118-00-FP | JACKSON | 122 | 16 |
| STA. 9+00.24 | | TO STA. 14+00 | | |
| FED. ROAD DIST. NO. | ILLINOIS | FED. AID PROJECT | | |

CONTRACT NO. 99219

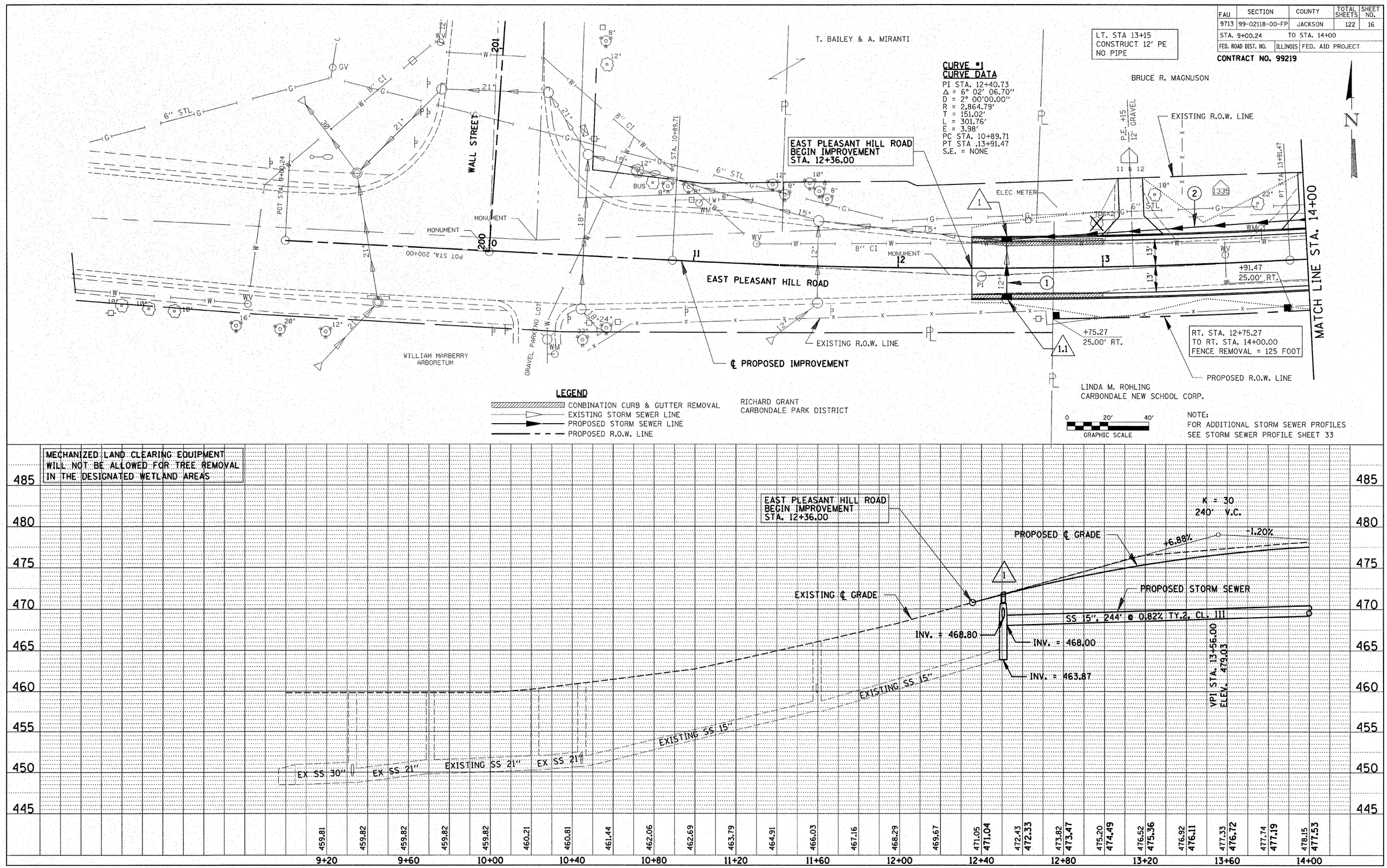


PLAN
NOTE BOOK NO.
SURVEYED
PLOTTED
ALIGNMENT CHECKED
RT. OF WAY CHECKED
CADD FILE NAME
BY
DATE

PROFILE
NOTE BOOK NO.
SURVEYED
PLOTTED
GRADES CHECKED
B.M. NOTED
STRUCTURE NOTAT'NS CHKD
BY
DATE

DATE: 19-Mar-07 14:42
FILE: P:\03\03470001\Cad\Phase II\47001ppl.dgn

| FAU | SECTION | COUNTY | TOTAL SHEETS | SHEET NO. |
|---|---|---|---|---|
| 9713 | 99-02118-00-FP | JACKSON | 122 | 17 |
| STA. 14+00 | TO STA. 20+00 | | | |
| FED. ROAD DIST. NO. | ILLINOIS | FED. AID PROJECT | | |

CONTRACT NO. 99219

LT. STA 14+15
CONSTRUCT 35' CE
NO PIPE

LT. STA 15+40
CONSTRUCT 20' CE
NO PIPE

LT. STA 16+29
CONSTRUCT 18' PE
NO PIPE

LT. STA 17+15
CONSTRUCT 16' PE
NO PIPE

LT. STA 18+15
CONSTRUCT 28' CE
NO PIPE
SAW CUT INCIDENTAL
TO ENTRANCE
CONSTRUCTION

LT. STA 18+64
CONSTRUCT 18' PE
NO PIPE

LT. STA 19+76
CONSTRUCT 14' PE
NO PIPE

BRUCE R. MAGNUSON

BILL MCELROY

BILL MCELROY

DONNA M. BUSH &

CF & RA LAND TRUST

PARCEL 2
LINDA RUSH

TRAILER PARK

TRAILER PARK

BUS

BUS

BIT PARKING

TEMP. EASEMENT

EXISTING R.O.W. LINE

PROPOSED R.O.W. LINE

EXISTING R.O.W. LINE

EAST PLEASANT HILL ROAD

MATCH LINE STA. 14+00

MATCH LINE STA. 20+00

BETTY ADAMS TRUSTEE

BETTY ADAMS TRUSTEE

JEFF WOODRUFF

GRAVEL PARKING LOT

PROPOSED R.O.W. LINE

PLEASANT HILL SCHOOL

LINDA M. ROHLING

PARCEL 1

℄ PROPOSED IMPROVEMENT

RT. STA. 14+00.00
TO RT. STA. 15+60.00
FENCE REMOVAL = 160 FOOT

RT. STA 15+71
CONSTRUCT 18' CE
NO PIPE

RT. STA 16+84
CONSTRUCT 16' CE
NO PIPE

RT. STA 17+06
CONSTRUCT 14' PE
NO PIPE

RT. STA 17+43
CONSTRUCT 24' PE
NO PIPE

RT. STA 18+87
CONSTRUCT 12' PE
NO PIPE

RT. STA 19+93
CONSTRUCT 18' PE
NO PIPE

A.R. STA. 16+47.00
EXISTING 12" R.C.C.P.
PIPE CULVERT REMOVAL = 30 FOOT
C.L.S.M. = 10.0 CU.YD.

**LEGEND**

- SIDEWALK REMOVAL & REPLACEMENT
- EXISTING STORM SEWER LINE
- PROPOSED STORM SEWER LINE

NOTE:
FOR ADDITIONAL STORM SEWER PROFILES
SEE STORM SEWER PROFILE SHEET 33

0 20' 40'
GRAPHIC SCALE

PLAN
SURVEYED
DRAWN
ALIGNMENT CHECKED
GRADES CHECKED
H.W. TIED
STRUCTURE
NOTE BOOK
NO.
DATE
BY
MAPPED
TM
ESCRIPT.DGN

PROFILE
SURVEYED
DRAWN
ALIGNMENT CHECKED
GRADES CHECKED
H.W. TIED
STRUCTURE
NOTE BOOK
NO.
DATE
BY
NOTATNS CHKD

MECHANIZED LAND CLEARING EQUIPMENT WILL NOT BE ALLOWED FOR TREE REMOVAL IN THE DESIGNATED WETLAND AREAS

VPI STA. 16+25
ELEV. 475.80

VPI STA. 19+50
ELEV. 477.75

K = 111
200' V.C.

K = 156
200' V.C.

SS 12", 31' @ 1.00%, TY. 1, CL. IV — INV. = 472.96

SS 12", 31' @ 1.00%, TY. 1 CL. IV — INV. = 472.96

INV. = 472.65 E,W
INV. = 471.80 S
INV. = 471.25 N

SPECIAL DITCH RIGHT

EXISTING ℄ GRADE

PROPOSED ℄ GRADE

SPECIAL DITCH RIGHT

476.70 RT.

INV. = 473.00 S

SPECIAL DITCH RIGHT

SS 15", 244' @ 0.82% TY. 2, CL. III

476.20 RT.

476.50 RT.

476.00 RT.

INV. = 470.00

SS 15", 155' @ 0.65% TY. 2, CL. III

INV. = 471.00

475.00 RT.

SS 12", 102' @ 0.98% TY. 2 CL. III

INV. = 471.25 E&S

475.00 LT.

474.50 LT.

476.00 LT.

INV. = 472.25

SS 12", 254' @ 0.98% TY. 1, CL. IV

PROPOSED STORM SEWER

SS 12", 31' @ 1.00%, TY. 1, CL. IV — INV. = 472.96

SS 12", 31' @ 1.00%, TY. 1 CL. IV — INV. = 472.96

INV. = 472.65 E,W
INV. = 472.40 N,S

-0.50% +0.60% -1.20% +0.60% -1.52% +4.05% +0.60% +1.88%

| 14+00 | 14+40 | 14+80 | 15+20 | 15+60 | 16+00 | 16+40 | 16+80 | 17+20 | 17+60 | 18+00 | 18+40 | 18+80 | 19+20 | 19+60 | 20+00 |
|---|---|---|---|---|---|---|---|---|---|---|---|---|---|---|---|
| 478.15 / 477.53 | 478.28 / 477.73 | 478.11 / 477.80 | 477.95 / 477.74 | 477.78 / 477.54 | 477.62 / 477.30 | 477.44 / 477.06 | 477.25 / 476.83 | 477.00 / 476.64 | 476.72 / 476.48 | 476.41 / 476.35 | 476.28 / 476.27 | 476.32 / 476.22 | 476.46 / 476.20 | 476.59 / 476.22 | 476.78 / 476.28 | 476.92 / 476.37 | 476.99 / 476.49 | 477.08 / 476.61 | 477.19 / 476.73 | 477.30 / 476.85 | 477.41 / 476.97 | 477.57 / 477.09 | 477.73 / 477.21 | 478.01 / 477.36 | 478.22 / 477.53 | 478.38 / 477.73 | 478.55 / 477.95 | 478.72 / 478.20 | 478.90 / 478.47 | 479.11 / 478.77 |

DATE: 19-Mar-07 14:43
FILE: P:\03\0347000I\Cad\Phase II\4700lpp2.dgn

| FAU | SECTION | COUNTY | TOTAL SHEETS | SHEET NO. |
|---|---|---|---|---|
| 9713 | 99-02118-00-FP | JACKSON | 122 | 18 |
| STA. 20+00 | | TO STA. 26+00 | | |
| FED. ROAD DIST. NO. | ILLINOIS | FED. AID PROJECT | | |

CONTRACT NO. 99219

LT. STA 20+94
CONSTRUCT 12' PE
NO PIPE

EXISTING 15" CONC.
PIPE CULVERT REMOVAL = 31.0 FT
C.L.S.M. = 12.1

LT. STA 21+72
CONSTRUCT 12' PE
NO PIPE

LT. STA 23+11
CONSTRUCT 20' PE
NO PIPE

LT. STA 23+71
CONSTRUCT 12' PE
NO PIPE

LT. STA 23+94
CONSTRUCT 12' FE
NO PIPE

LT. STA 24+96
CONSTRUCT 16' PE
NO PIPE

PARCEL 3
LELIAN F. ADAMS TRUSTEE
BETTY F. ADAMS TRUSTEE

EARL & BETTY CULP

PARCEL 6
RUSSEL MAYER

P.I. STA. 25+99.43
Δ = 0° 28' 49.44" (RT)
NO CURVE

℄ PROPOSED IMPROVEMENT

CONSTRUCTION LIMITS

EXISTING R.O.W. LINE

PROPOSED R.O.W. LINE
+40.00
25.00 LT.

+40.00
21.02' LT

+87.18
23.00' LT.

+87.53
26.81' LT.

MICHAEL D. DIXON

BRICK PILLAR

BRICK PILLAR
2' SQ.

TD12X4

CONC. HEADWALL
AND CULVERT

EAST PLEASANT HILL ROAD

MATCH LINE STA. 20+00

MATCH LINE STA. 26+00

+90.00
23.00' RT.

+90.00
30.00' RT.

+30.00
23.00' RT.

+30.00
30.00' RT.

+00.00
23.00' RT.

+25.00
23.17' RT.

+25.00
30.00' RT.

+00.00
30.00' RT.

+00.00
23.67' RT.

+50.00
24.00' RT.

+50.00
35.00' RT.

+75.00
35.00' RT.

+99.43
23.00' RT.

+75.00
24.84' RT.

BETTY FROST ADAMS

STAN &
BEVERLY ROBBINS

TEMP. EASEMENT

BETTY L. FROST ADAMS
PARCEL 4

TEMP. EASEMENT

EXISTING R.O.W. LINE

ROBERT C. & MAXINE BUSH
PARCEL 5

TEMP. EASEMENT

BUSH TRAILER PARK

ROBERT C. & MAXINE BUSH
PARCEL 5

TEMP. EASEMENT

JOHN A. FLY

RT. STA 20+79
CONSTRUCT 14' FE
NO PIPE

RT. STA 20+95
CONSTRUCT 12' PE
NO PIPE

RT. STA 22+12
CONSTRUCT 14' PE
NO PIPE

RT. STA 23+46
CONSTRUCT 12' PE
NO PIPE

RT. STA 23+69
CONSTRUCT 20' PE
NO PIPE

RT. STA 24+70
CONSTRUCT 12' PE
NO PIPE

RT. STA 25+51
CONSTRUCT 14' PE
NO PIPE

NOTE:
FOR ADDITIONAL STORM SEWER PROFILES
SEE STORM SEWER PROFILE SHEET 33

0 20' 40'
GRAPHIC SCALE

N

MECHANIZED LAND CLEARING EQUIPMENT
WILL NOT BE ALLOWED FOR TREE REMOVAL
IN THE DESIGNATED WETLAND AREAS

EXISTING ℄ GRADE

PROPOSED ℄ GRADE

VPI STA. 24+75.00
ELEV. 487.62

K = 32
200' V.C.

+1.88%

-4.30%

SS 12"
254' @ 1.39%
TY. 1, CL. IV
INV. = 474.75

INV. = 475.00

PROPOSED STORM SEWER

SS 12"
14' @ 1.79%
TY. 1, CL. IV

| | 20+00 | 20+40 | 20+80 | 21+20 | 21+60 | 22+00 | 22+40 | 22+80 | 23+20 | 23+60 | 24+00 | 24+40 | 24+80 | 25+20 | 25+60 | 26+00 |
|---|---|---|---|---|---|---|---|---|---|---|---|---|---|---|---|---|
| EXISTING ℄ | 479.11 | 479.43 | 479.76 | 480.08 | 480.41 | 480.75 | 481.19 | 481.63 | 482.06 | 482.58 | 483.19 | 483.57 | 483.86 | 484.14 | 484.43 | 484.71 |
| PROPOSED ℄ | 478.77 | 479.09 | 479.45 | 479.82 | 480.19 | 480.57 | 480.95 | 481.32 | 481.70 | 482.07 | 482.45 | 482.83 | 483.20 | 483.58 | 483.95 | 484.33 |
| | 485.08 | 485.76 | 486.06 | 486.38 | 486.61 | 486.84 | 486.48 | 485.85 | 484.94 | 484.16 | 483.38 | 482.70 | 482.17 | 481.64 | | |
| | 484.71 | 485.46 | 485.83 | 486.11 | 486.27 | 486.31 | 486.22 | 486.01 | 485.68 | 485.22 | 484.64 | 483.93 | 483.11 | 482.32 | | |

DATE: 19-Mar-07 14:44
FILE: P:\03\0347000l\Cad\Phase II\4700lpp3.dgn

| FAU | SECTION | COUNTY | TOTAL SHEETS | SHEET NO. |
|---|---|---|---|---|
| 9713 | 99-02118-00-FP | JACKSON | 122 | 19 |
| STA. 26+00 | TO STA. 32+00 | | | |
| FED. ROAD DIST. NO. | ILLINOIS | FED. AID PROJECT | | |

CONTRACT NO. 99219

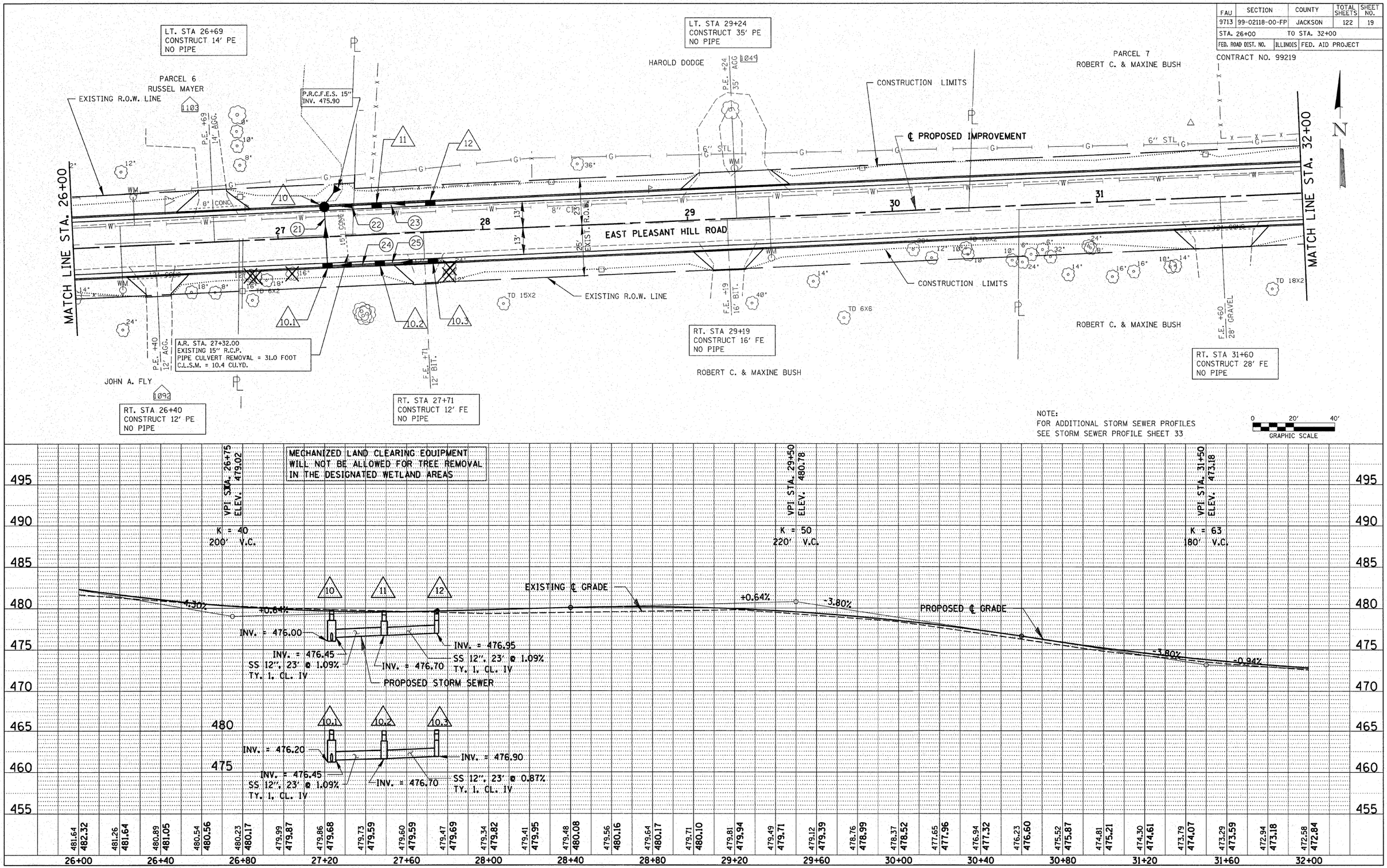


DATE: 19-Mar-07 14:45
FILE: P:\03\03470001\Cad\Phase II\4700lpp4.dgn

| FAU | SECTION | COUNTY | TOTAL SHEETS | SHEET NO. |
|---|---|---|---|---|
| 9713 | 99-02118-00-FP | JACKSON | 122 | 20 |
| STA. 32+00 | | TO STA. 38+00 | | |
| FED. ROAD DIST. NO. | ILLINOIS | FED. AID PROJECT | | |

CONTRACT NO. 99219

PARCEL 7

ROBERT. C. & MAXINE BUSH

PROPOSED R.O.W. LINE

AGGREGATE DITCH SEE SHEET 45 FOR QUANTITIES

P.R.C.F.E.S. 18" INV. 467.00

A.R. STA. 33+04.00 SKEW = 0°
EXISTING 12"R.C.C.P. TO BE REMOVED
PIPE CULVERT. REMOVAL = 33 FOOT
C.L.S.M. = 11.0 CU.YD.

TEMP. EASEMENT +00.00 23.00' LT.

+80.00 35.00' LT.

+80.00 30.00' LT.

+80.00 23.00' LT.

+10.00 35.00' LT.

+10.00 23.00' LT.

TEMP. EASEMENT +50.00 30.00" LT.

EXISTING R.O.W. LINE

+00.00 23.00' LT.

℄ PROPOSED IMPROVEMENT

CONSTRUCTION LIMITS

+23.94 25.75' LT.

+23.75 23.00' LT.

TEMP. EASEMENT +50.00 25.54' LT.

+00.00 35.00' LT.

+68.26 25.45' LT.

MATCH LINE STA. 32+00

MATCH LINE STA. 38+00

EAST PLEASANT HILL ROAD

8" CI

12" SMC

12" SMC

12" PVC

ID10X2

WM

+00.00 25.00' RT.

+20.38 33.00' RT.

+19.76 45.00' RT.

+55.33 33.00' RT.

EXISTING R.O.W. LINE

CONSTRUCTION LIMITS

TEMPORARY EASEMENT LINE

P.E. +10 18' CONC.

936

RT.. STA 34+10
CONSTRUCT 18' PE
NO PIPE

P.E. +79 14" AGG.

RT.. STA 35+79
CONSTRUCT 14' PE
NO PIPE

P.E. +44 14" AGG.

RT.. STA 37+44
CONSTRUCT 14' PE
NO PIPE

ROBERT. C. & MAXINE BUSH

NORMAN & BETH KINNEY

ROBERT. C. & MAXINE BUSH

JEFFERSON LINDSEY IV
PARCEL 10

NOTE:
FOR ADDITIONAL STORM SEWER PROFILES
SEE STORM SEWER PROFILE SHEET 33

0 20' 40'
GRAPHIC SCALE

N

PLAN
SURVEYED
DRAWN
ALIGNMENT CHECKED
NOTE BOOK
NO.
PLOT FILE NAME
DATE
BY
DESCRIPTION

PROFILE
SURVEYED
DRAWN
GRADES CHECKED
NOTE BOOK
NO.
STRUCTURE NOTATING CHKD

MECHANIZED LAND CLEARING EQUIPMENT WILL NOT BE ALLOWED FOR TREE REMOVAL IN THE DESIGNATED WETLAND AREAS

VPI STA. 33+50
ELEV. 471.30

K = 75
220' V.C.

VPI STA. 35+75
ELEV. 475.80

K = 34
230' V.C.

EXISTING ℄ GRADE

PROPOSED ℄ GRADE

-0.94%

+2.00%

+2.00%

-4.80%

SS 12"

24" @ 2.92%
TY. 1. CL. IV

25' @ 0.80%
TY. 1. CL. IV

INV = 468.50 S

INV = 469.90 W

INV = 469.70 E,W

INV = 469.00 E

INV = 467.20 NE

24" @ 0.83%
TY. 1. CL. IV

INV = 468.80 N,S

INV = 469.50 E

485 480 475 470 465 460 455 450 445

| 32+00 | 32+40 | 32+80 | 33+20 | 33+60 | 34+00 | 34+40 | 34+80 | 35+20 | 35+60 | 36+00 | 36+40 | 36+80 | 37+20 | 37+60 | 38+00 |
|---|---|---|---|---|---|---|---|---|---|---|---|---|---|---|---|
| 472.58 / 472.84 | 472.41 / 472.55 | 472.23 / 472.33 | 472.05 / 472.17 | 471.88 / 472.06 | 471.70 / 472.01 | 471.75 / 472.01 | 471.80 / 472.06 | 471.85 / 472.17 | 471.90 / 472.33 | 471.94 / 472.54 | 472.22 / 472.81 | 472.52 / 473.13 | 472.82 / 473.50 | 473.12 / 473.84 | 473.42 / 474.06 | 473.60 / 474.17 | 473.78 / 474.15 | 473.96 / 474.02 | 474.07 / 473.77 | 473.68 / 473.40 | 472.88 / 472.92 | 472.07 / 472.31 | 470.93 / 471.59 | 469.69 / 470.75 | 468.40 / 469.81 | 467.16 / 468.95 | 465.93 / 468.19 | 464.99 / 467.53 | 464.29 / 466.97 | 463.59 / 466.50 |

DATE: 19-Mar-07 14:50
FILE: P:\03\0347000l\Cad\Phase II\4700lpp5.dgn

| FAU | SECTION | COUNTY | TOTAL SHEETS | SHEET NO. |
|---|---|---|---|---|
| 9713 | 99-02118-00-FP | JACKSON | 122 | 21 |
| STA. 38+00 | TO STA. 44+00 | | | |
| FED. ROAD DIST. NO. | ILLINOIS | FED. AID PROJECT | | |

CONTRACT NO. 99219

PLEASANT WOODS SUBDIVISION

LT. STA 40+59
CONSTRUCT 12' PE
NO PIPE

LT. STA. 41+47.00
TO LT. STA. 42+47.00
FENCE REMOVAL = 100 FOOT

LT. STA 42+90
CONSTRUCT 30' PE
NO PIPE

AGGREGATE DITCH SEE SHEET 45 FOR QUANTITIES

P.R.C.F.E.S. 18"
INV. 456.00

A.R. STA. 38+48.00 SKEW = 0°
EXISTING 15" CMP TO BE REMOVED
PIPE CULVERT. REMOVAL = 38 FOOT
C.L.S.M. = 11.6 CU.YD.

P.R.C.F.E.S. 24"
INV. 455.97

AGGREGATE DITCH SEE SHEET 45 FOR QUANTITIES

MATCH LINE STA. 38+00

MATCH LINE STA. 44+00

℄ PROPOSED IMPROVEMENT

PARCEL 7
ROBERT C. & MAXINE BUSH

PARCEL 8
AMY L. McMORROW

EAST PLEASANT HILL ROAD

PROPOSED R.O.W. LINE

TEMP. EASEMENT

TEMP. EASEMENT CONSRUCTION LIMITS

EXISTING R.O.W. LINE

+40.00 35.00' LT.
TEMP. EASEMENT

+00.00 35.00' LT.
+40.00 24.82' LT.

+70.00 35.00' LT.
+70.00 24.58' LT.

+00.00 23.54' LT.

+27.00 22.52' LT.

+05.00 40.00' LT.
+05.00 35.00' LT.

+05.00 21.89' LT.

+35.00 40.00' LT.
+35.00 35.00' LT.

+75.00 55.00' LT.
+50.00 35.00' LT.

+05.00 55.00' LT.

+35.00 21.65' LT.

+50.00 20.73' LT.

+00.00 25.00' RT.

+20.87 25.00' RT.

+00.00 33.00' RT.
+20.46 33.00' RT.

+50.00 45.00' RT.

+95.94 25.00' RT.

+40.00

+10.00 25.00' RT.

+10.00 40.00' RT.

+30.00 25.00' RT.

+00.00 25.00' RT.

+40.00 25.00' RT.

+50.00 45.00' RT.

+85.00 45.00' RT.

+20.47 35.00' RT.

+30.00 35.00' RT.

+10.00 35.00' RT.

P.E. +59 12' BIT.

P.E. +90 30' BIT.

P.E. +69 14' BIT.

C.E. +44 30' BIT.

P.E. +29 14' AGG.

P.E. +62 12' AGG.

6" STL

8" CI

12" CMP

15" CMP

18" CMP

24" CMP

12" CONC

18" CONC

24" CONC

PINCH PIPE

TDG

WM

BUS

639 638 808 834

30 30.1 30.2 31 31.1 31.2 32

39 40 41 42 43 44 45 46 50 51 52

TEMPORARY EASEMENT LINE

PROPOSED R.O.W. LINE
PAUL L. & TRACY L. LOGEMAN

A.R. STA. 42+20.00 SKEW = 0°
EXISTING 12" R.C.C.P. TO BE REMOVED
PIPE CULVERT. REMOVAL = 37 FOOT

JOHN MYERS & SELINA WANG
PARCEL 13

M. ALLEN ARNOLD TRUSTEE
PARCEL 14

RT. STA 43+69
CONSTRUCT 14' PE
NO PIPE

JEFFERSON LINDSEY IV
PARCEL 10

PARCEL 11

THOMAS E. MARGOLIS &
DONNA MARIE MARGOLIS

TEMP. EASEMENT

RT. STA 38+29
CONSTRUCT 14' PE
15" CMP 38' LONG
END SECTIONS = 2

M. ALLEN ARNOLD

PLEASANT HILL MOBILE
HOME PARK

RT. STA 39+44
CONSTRUCT 30' CE
NO PIPE

JOAN B. PHEMISTER

PARCEL 12

RT. STA 41+62
CONSTRUCT 12' PE
NO PIPE

NOTE:
FOR ADDITIONAL STORM SEWER PROFILES
SEE STORM SEWER PROFILE SHEET 33

LEGEND

TREE REMOVAL ACRE

N

0 20' 40'
GRAPHIC SCALE

MECHANIZED LAND CLEARING EQUIPMENT WILL NOT BE ALLOWED FOR TREE REMOVAL IN THE DESIGNATED WETLAND AREAS

VPI STA. 38+25
ELEV. 463.80

K = 40
270' V.C.

-4.80%
+1.90%
-1.57%

462.50 RT.

15" C.M.P.
38' LONG

SPECIAL DITCH RIGHT

SS 12", 17', @ 0.53% TY.I, CL. IV

INV. = 462.65 W
463.17 RT.
SS 12", 18', @ 1.06% TY.I, CL. IV
461.50 RT.
INV. = 462.46 E.W
INV. = 462.37 E
INV. = 457.52 S
INV. = 456.92 N

SS 12", 17', @ 0.53% TY.I, CL. IV
SS 12", 18', @ 1.06% TY.I, CL. IV
TY. I, CL. IV
INV. = 462.65 W
INV. = 462.46 E.W
INV. = 462.37 E
INV. = 458.57 N.S

EXISTING ℄ GRADE

VPI STA. 40+25
ELEV. 467.60

K = 32
130' V.C.

+1.90%
-2.20%

PROPOSED ℄ GRADE

461.25 RT.
INV. = 458.54 S
INV. = 456.04 N

-1.25%
+1.67%

461.00 RT.
461.50 RT.

-2.20%
-8.00%

SPECIAL DITCH RIGHT

VPI STA. 43+25
ELEV. 461.00

K = 34
200' V.C.

| 38+00 | 38+40 | 38+80 | 39+20 | 39+60 | 40+00 | 40+40 | 40+80 | 41+20 | 41+60 | 42+00 | 42+40 | 42+80 | 43+20 | 43+60 | 44+00 |
|---|---|---|---|---|---|---|---|---|---|---|---|---|---|---|---|
| 463.59 466.50 | 463.22 466.14 | 462.92 465.87 | 463.10 465.71 | 463.28 465.64 | 463.46 465.67 | 464.06 465.80 | 464.67 466.03 | 465.30 466.37 | 465.94 466.68 | 466.58 466.87 | 466.70 466.94 | 466.81 466.88 | 466.80 466.69 | 465.87 466.37 | 464.93 465.95 | 464.13 465.51 | 463.34 465.07 | 462.56 464.63 | 462.11 464.19 | 461.67 463.75 | 461.58 463.31 | 461.49 462.84 | 461.39 462.25 | 461.30 461.55 | 461.11 460.73 | 460.25 459.80 | 459.38 458.75 | 458.43 457.59 | 456.42 456.31 | 454.37 454.91 |

DATE: 19-Mar-07 14:51
FILE: P:\03\0347000I\Cad\Phase II\4700lpp6.dgn

| FAU | SECTION | COUNTY | TOTAL SHEETS | SHEET NO. |
|---|---|---|---|---|
| 9713 | 99-02118-00-FP | JACKSON | 122 | 22 |
| STA. 44+00 | TO STA. 50+00 | | | |
| FED. ROAD DIST. NO. | ILLINOIS | FED. AID PROJECT | | |

CONTRACT NO. 99219

P.I. STA. 49+98.68
Δ = 0° 00' 26.89" (RT)
NO CURVE

A.R. STA. 49+36.53 SKEW = 6°24'12"
PIPE CULVERT TYPE 2 R.C.C.P. 30"
71 FT. LONG
U.S.F.L. AT END OF FLARED END SECTION
44.7' RT. STA. 49+30.7 ELEV. 420.50
D.S.F.L. AT END OF FLARED END SECTION
43.2' LT. STA. 49+41.4 ELEV. 416.96
PRECAST REINFORCED CONCRETE FLARED
END SECTIONS 30" = 2 EACH
EXISTING 30" C.M.P. TO BE REMOVED
PIPE CULVERT REMOVAL = 40 FOOT

LT. STA 46+59
CONSTRUCT 16' FE
NO PIPE

AGGREGATE DITCH SEE SHEET 45 FOR QUANTITIES

AGGREGATE DITCH SEE SHEET 45 FOR QUANTITIES

P.R.C.F.E.S. 12"
INV. 429.15

F.E. +59
16' BIT.

PARCEL 8
AMY L. McMORROW

PARCEL 9
JEFFERSON F. LINDSEY, IV

PARCEL 18
JAY D. CUPP

PROPOSED R.O.W. LINE
TEMP. EASEMENT
CONSRUCTION LIMITS
EXISTING R.O.W. LINE
℄ PROPOSED IMPROVEMENT

+59.03 20.00' LT.
+43.52 30.00' LT.
+42.84 20.00' LT.
+00.00 30.00' LT.
+50.00 50.00' LT.
+50.00 30.00' LT.
+98.69 50.00' LT.

6" PVC
6" STL
8" CI
4" CI
12" CMP
16"

MATCH LINE STA. 44+00
MATCH LINE STA. 50+00
BT STA. 49+98.68

EAST PLEASANT HILL ROAD

45 46 47 48 49

13' 13'

+00.00 25.00' RT.
+00.00 35.00' RT.
+00.00 35.00' RT.
+50.00 28.00' RT.
+50.00 25.00' RT.
+73.95 32.48' RT.
+40.00 33.00' RT.
+06.52 48.41' RT.
+20.00 55.00' RT.
+40.00 55.00' RT.
+55.00 64.16' RT.
+64.81 62.65' RT.

M. ALLEN ARNOLD TRUSTEE
PARCEL 14

GEORGE R. ARNOLD TRUSTEE
PARCEL 15

GEORGE R. ARNOLD TRUSTEE

M ALLEN ARNOLD TRUSTEE

TIMOTHY R & JULIE A CULLEN

TEMP. EASEMENT

CONSRUCTION LIMITS

EXISTING R.O.W. LINE

PROPOSED R.O.W. LINE

NOTE:
FOR ADDITIONAL STORM SEWER PROFILES
SEE STORM SEWER PROFILE SHEET 33

**LEGEND**

TREE REMOVAL ACRE

RT. STA 49+61
CONSTRUCT 16' PE
NO PIPE

P.E. +61
16' ACC.

0 20' 40'
GRAPHIC SCALE

MECHANIZED LAND CLEARING EQUIPMENT
WILL NOT BE ALLOWED FOR TREE REMOVAL
IN THE DESIGNATED WETLAND AREAS

PROPOSED ℄ GRADE

EXISTING ℄ GRADE

VPI STA. 48+15.00
ELEV. 421.80

K = 40
510' V.C.

INV. = 433.00 S
INV. = 431.06 N

430.00 RT.

-1.00%
-6.00%
-8.00%
-10.00%
+4.60%

429.00 RT.
INV. = 426.48

426.00 RT.
INV. = 426.38

INV. = 426.48

SPECIAL DITCH RIGHT

INV. = 426.28

421.00 RT.
INV. = 426.38

INV. = 426.28 W
INV. = 426.00 N
INV. = 422.00 SE

INV. = 421.80
INV. = 419.80

INV. = 421.51

SS 12" 145' @ 4.14%
TY. 2, CL. III

27' @ 0.74%
TY. 2, CL. III

18' @ 0.56%
17' @ 0.59%
SS 12"
TY. I, CL. IV

30" PIPE @ ℄

| 454.37 454.91 | 452.09 453.40 | 449.80 451.80 | 447.52 450.20 | 445.23 448.60 | 442.95 447.00 | 441.26 445.40 | 439.58 443.80 | 437.89 442.20 | 436.20 440.65 | 434.57 439.20 | 433.72 437.84 | 432.87 436.59 | 432.03 435.44 | 431.18 434.38 | 430.35 433.42 | 429.80 432.56 | 429.26 431.80 | 428.71 431.14 | 428.17 430.58 | 427.66 430.12 | 427.17 429.75 | 426.73 429.48 | 426.28 429.32 | 425.84 429.25 | 425.41 429.28 | 425.26 429.41 | 425.19 429.64 | 425.24 429.96 | 425.65 430.39 | 426.07 430.92 |
|---|---|---|---|---|---|---|---|---|---|---|---|---|---|---|---|---|---|---|---|---|---|---|---|---|---|---|---|---|---|
| 44+00 | 44+40 | 44+80 | 45+20 | 45+60 | 46+00 | 46+40 | 46+80 | 47+20 | 47+60 | 48+00 | 48+40 | 48+80 | 49+20 | 49+60 | 50+00 | | | | | | | | | | | | | | |

DATE: 19-Mar-07 14:53
FILE: P:\03\0347000l\Cad\Phase II\4700lpp7.dgn

| FAU | SECTION | COUNTY | TOTAL SHEETS | SHEET NO. |
|---|---|---|---|---|
| 9713 | 99-02118-00-FP | JACKSON | 122 | 23 |
| STA. 50+00 | TO STA. 56+00 | | | |
| FED. ROAD DIST. NO. | ILLINOIS | FED. AID PROJECT | | |

CONTRACT NO. 99219

| FAU | SECTION | COUNTY | TOTAL SHEETS | SHEET NO. |
|---|---|---|---|---|
| 9713 | 99-02118-00-FP | JACKSON | 122 | 24 |
| STA. 56+00 | TO STA. 62+00 | | | |
| FED. ROAD DIST. NO. | ILLINOIS | FED. AID PROJECT | | |

CONTRACT NO. 99219

PARCEL 19
HAROLD F & VIVIAN M YOUNG, TRUSTEES

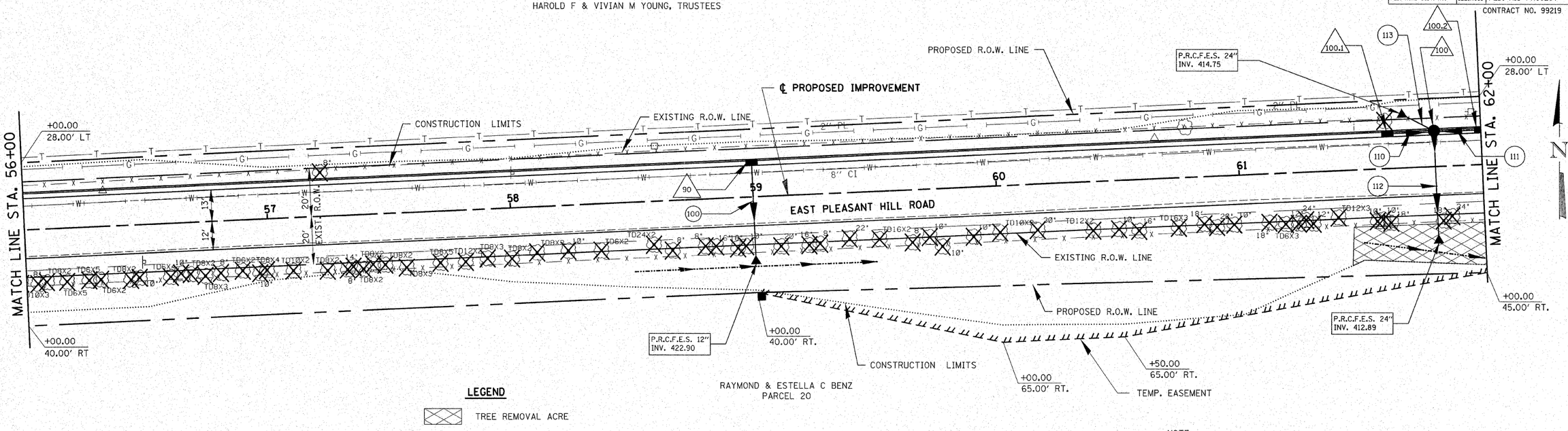


**LEGEND**

TREE REMOVAL ACRE

NOTE:
FOR ADDITIONAL STORM SEWER PROFILES
SEE STORM SEWER PROFILE SHEET 33

0 20' 40'
GRAPHIC SCALE

MECHANIZED LAND CLEARING EQUIPMENT WILL NOT BE ALLOWED FOR TREE REMOVAL IN THE DESIGNATED WETLAND AREAS

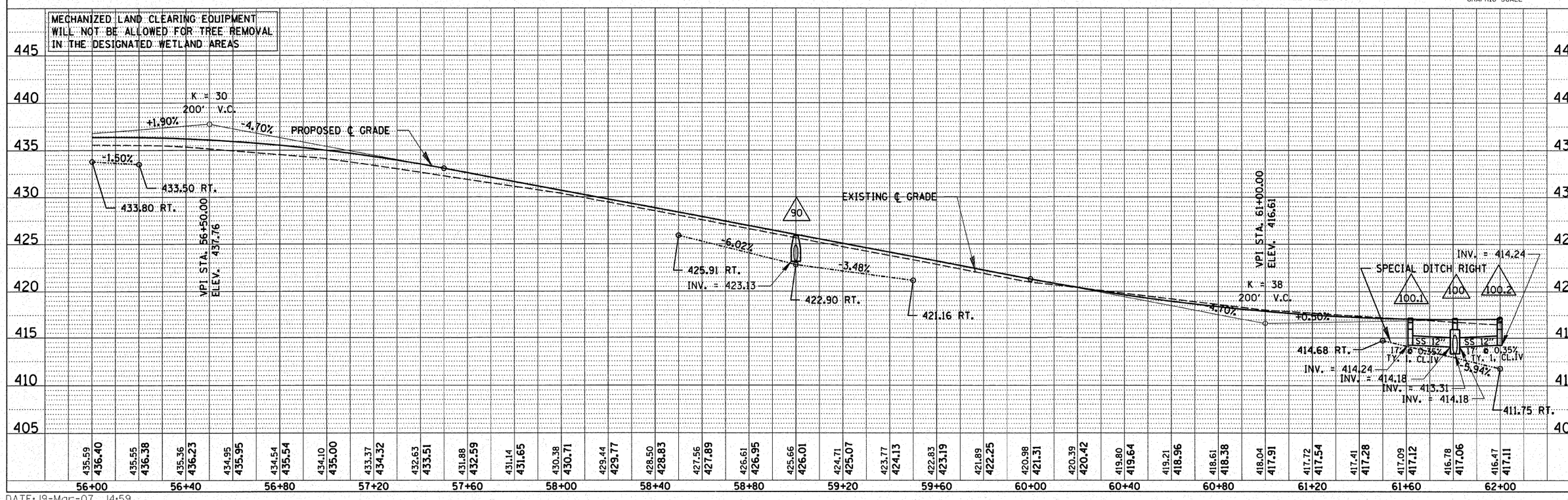


DATE: 19-Mar-07 14:59
FILE: P:\03\0347000l\Cad\Phase II\4700lpp9.dgn

| FAU | SECTION | COUNTY | TOTAL SHEETS | SHEET NO. |
|---|---|---|---|---|
| 9713 | 99-02118-00-FP | JACKSON | 122 | 25 |
| STA. 62+00 | TO STA. 68+00 | | | |
| FED. ROAD DIST. NO. | ILLINOIS | FED. AID PROJECT | | |

CONTRACT NO. 99219

PARCEL 19
HAROLD F & VIVIAN M YOUNG, TRUSTEES

LT. STA 63+14
CONSTRUCT 15' PE
NO PIPE

LT. STA 63+87
CONSTRUCT 16' CE
NO PIPE

LT. STA 66+66
CONSTRUCT 20' CE
NO PIPE

LT. STA 67+35
CONSTRUCT 12' PE
NO PIPE

TRAILER PARK

EXISTING R.O.W. LINE

CONSTRUCTION LIMITS

TEMP. EASEMENT

+50.00 28.00' LT
+50.00 30.00' LT
+50.00 20.00' LT
+10.00 30.00' LT.
+10.00 25.00' LT
+82.51 25.00' LT.
+40.00 30.00' LT.
+40.00 25.00' LT.
+10.00 50.00' LT.
+10.00 30.00' LT.
+60.00 50.00' LT.
PARCEL 22
MICHAEL D. & CONNIE YOUNG
+60.00 20.00' LT.
+82.51 20.00' LT
+85.55 20.00' LT.

P.E. +14 15' AGG.
C.E. +87 16' AGG.
C.E. +66 20' BIT.
P.E. +35 12' BIT.
P.E. +85 18' AGG.
P.E. +64 18' AGG.
P.E. +38 20' BIT.

403 110 120 313

MATCH LINE STA. 62+00

MATCH LINE STA. 68+00

EAST PLEASANT HILL ROAD

PLEASANT HILL RD

12" CMP
18" RCP
8" PE CORRUGATED PLASTIC PIPE
8" CI
18" RCCP

EXISTING R.O.W. LINE
CONSTRUCTION LIMITS
PROPOSED R.O.W. LINE
TEMP. EASEMENT

+00.00 45.00' RT.
+06.11 45.00' RT.
+50.00 45.00' RT.
+50.00 60.00' RT.
+82.51 45.00' RT.
+82.51 60.00' RT.
+00.00 45.00' RT.
+85.55 45.00' RT.
+85.55 55.00' RT.
+00.00 55.00' RT.

℄ PROPOSED IMPROVEMENT

AR. STA 62+28
EXISTING 18" RCCP TO BE REMOVED
PIPE CULVERT REMOVAL = 28 FOOT
C.L.S.M. = 16.7 CU.YD.

P.R.C.F.E.S. 12"
INV. = 415.35

RT. STA 64+85
CONSTRUCT 16' FE
15" CMP 30' LONG
END SECTION = 2

RT. STA 65+64
CONSTRUCT 18' PE
NO PIPE

RT. STA 66+38
CONSTRUCT 20' PE
15" CMP 34' LONG
END SECTIONS = 2

RAYMOND & ESTELLA C BENZ
PARCEL 20

JAMES & JENNY PREST
PARCEL 21

NOTE:
FOR ADDITIONAL STORM SEWER PROFILES
SEE STORM SEWER PROFILE SHEET 33

**LEGEND**

TREE REMOVAL ACRE

**CURVE #2**
**CURVE DATA**
PI STA. 66+84.04
Δ = 2° 22' 07.96" (RT)
D = 1° 10' 31"
R = 4,911.07'
T = 101.54'
L = 203.05'
E = 1.05'
PC STA. 65+82.51
PT STA. 67+85.55
S.E. = NONE

0 20' 40'
GRAPHIC SCALE

N

MECHANIZED LAND CLEARING EQUIPMENT WILL NOT BE ALLOWED FOR TREE REMOVAL IN THE DESIGNATED WETLAND AREAS

EXISTING ℄ GRADE
PROPOSED ℄ GRADE
VPI STA. 67+20.00
ELEV. 419.70
K = 31
260' V.C.
+0.50%
-8.00%
+0.30%
+0.30%
-0.81%
411.50 RT.
411.75 RT.
SPECIAL DITCH RIGHT
415.05 RT.
INV. = 415.47
415.35 RT.
SPECIAL DITCH RIGHT
415.43 RT.
+78
RT 15" C.M.P.
30' LONG & END
SECTIONS
RT 15" C.M.P.
34' LONG & END
SECTIONS

| 62+00 | 62+40 | 62+80 | 63+20 | 63+60 | 64+00 | 64+40 | 64+80 | 65+20 | 65+60 | 66+00 | 66+40 | 66+80 | 67+20 | 67+60 | 68+00 |
|---|---|---|---|---|---|---|---|---|---|---|---|---|---|---|---|
| 416.47 417.11 | 416.45 417.21 | 416.43 417.31 | 416.41 417.41 | 416.38 417.51 | 416.37 417.61 | 416.49 417.71 | 416.74 417.81 | 416.98 417.91 | 417.22 418.01 | 417.40 418.11 | 417.53 418.20 | 417.65 418.30 | 417.78 418.40 | 417.90 418.50 | 418.02 418.60 | 418.20 418.70 | 418.39 418.80 | 418.58 418.90 | 419.07 419.00 | 419.56 419.09 | 419.91 419.05 | 420.19 418.89 | 419.91 418.60 | 419.44 418.18 | 418.88 417.62 | 418.09 416.94 | 417.07 416.12 | 415.77 415.18 | 414.24 414.10 | 412.70 412.89 |

DATE: 19-Mar-07 15:15
FILE: P:\03\0347000l\Cad\Phase II\4700lppl0.dgn

| FAU | SECTION | COUNTY | TOTAL SHEETS | SHEET NO. |
|---|---|---|---|---|
| 9713 | 99-02118-00-FP | JACKSON | 122 | 26 |
| STA. 68+00 | TO STA. 74+00 | | | |
| FED. ROAD DIST. NO. | ILLINOIS | FED. AID PROJECT | | |

CONTRACT NO. 99219

PLAN
SURVEYED
DRAWN
ALIGNMENT CHECKED
GRADES CHECKED
NOTE BOOK
NO.
DATE
BY
REVISIONS
DESCRIPTION

PARCEL 22
MICHAEL D. &
CONNIE YOUNG

+00.01
25.00' LT.

+50.00
25.00' LT.

+99.73
20.00' LT.

+50.00
20.00' LT.

TEMP. EASEMENT

LT. STA 69+87
CONSTRUCT 24' PE

LT. STA 70+98
CONSTRUCT 20' PE

PARCEL 23
WILLIAM H. &
CARLA J. YOUNG

+35.00
25.00' LT.

+35.00
30.00' LT.

CONSTRUCTION LIMITS
PROPOSED R.O.W. LINE
EXISTING R.O.W. LINE

MATCH LINE STA. 68+00

MATCH LINE STA. 74+00

EAST PLEASANT HILL ROAD

+63.97
20.00' RT.

EXISTING R.O.W. LINE

+50.00
45.00' RT.

+63.23
45.00' RT.

P.R.C.F.E.S. 12"
INV. = 398.50

CONSTRUCTION LIMITS

+91.49
45.00' RT.

+38.22
45.00' RT.

+38.22
50.00' RT.

EXISTING R.O.W. LINE

+00.00
55.00' RT.

TEMPORARY EASEMENT

JAMES & JENNY PREST
PARCEL 21

RT. STA 70+24
CONSTRUCT 14' PE
15" CMP 24' LONG
END SECTIONS = 2

P.R.C.F.E.S. 12"
INV. = 391.69

JEFF G. CROWELL
PARCEL 24

WETLANDS SITE 1
POND

+12.20
50.00' RT.

MATT WRIGHT

MICHAEL WRIGHT

RT. STA 72+55
CONSTRUCT 12' PE
30" CMP 22' LONG
END SECTIONS = 2

**LEGEND**

TREE REMOVAL ACRE

NOTE:
FOR ADDITIONAL STORM SEWER PROFILES
SEE STORM SEWER PROFILE SHEET 33

**CURVE #3**
**CURVE DATA**
PI STA. 72+01.93
Δ = 5° 31' 04.29" (RT)
D = 2° 30' 00.00"
R = 2,291.83'
T = 110.44'
L = 220.71'
E = 2.66'
PC STA. 70+91.49
PT STA. 73+12.20
TRANSITION
STA. 70+32.72 TO STA. 71+11.08
STA. 72+92.61 TO STA. 73+70.97
S.E. = 2.5%

0 20' 40'
GRAPHIC SCALE

PROFILE
SURVEYED
DRAWN
ALIGNMENT CHECKED
GRADES CHECKED
NOTE BOOK
NO.
DATE
BY
REVISIONS
DESCRIPTION

MECHANIZED LAND CLEARING EQUIPMENT
WILL NOT BE ALLOWED FOR TREE REMOVAL
IN THE DESIGNATED WETLAND AREAS

405.30

PROPOSED ℄ GRADE

VPI STA. 70+50.00
ELEV. 393.30

K = 39
275' V.C.

-8.00%

-10.60%

402.80 RT.

SPECIAL DITCH RIGHT
INV. = 398.81

-6.00%

397.50 RT.

15" C.M.P.
24' LONG
INV. = 392.69

-0.89%

389.70 RT.

-2.20%

386.62 RT.

30" C.M.P.
22' LONG

SPECIAL DITCH RIGHT

EXISTING ℄ GRADE

-0.89%

VPI STA. 73+40.00
ELEV. 390.73

K = 169
150' V.C.

SPECIAL DITCH LEFT
+0.00%

387.00 LT.

386.50 LT.
-1.00%

385.54 RT.

-0.60%

410 405 400 395 390 385 380 375 370

| 68+00 | 68+40 | 68+80 | 69+20 | 69+60 | 70+00 | 70+40 | 70+80 | 71+20 | 71+60 | 72+00 | 72+40 | 72+80 | 73+20 | 73+60 | 74+00 |
|---|---|---|---|---|---|---|---|---|---|---|---|---|---|---|---|
| 412.70 412.89 | 410.84 411.55 | 408.98 410.08 | 407.11 408.50 | 405.25 406.90 | 403.42 405.30 | 402.11 403.71 | 400.80 402.20 | 399.48 400.79 | 398.17 399.49 | 397.14 398.29 | 396.31 397.19 | 395.51 396.20 | 394.84 395.31 | 394.17 394.53 | 393.50 393.85 | 392.85 393.27 | 392.19 392.79 | 391.61 392.42 | 391.44 392.16 | 391.25 391.97 | 390.96 391.79 | 390.68 391.52 | 390.44 391.44 | 390.22 391.27 | 390.02 391.12 | 389.93 391.00 | 389.83 390.90 | 389.73 390.82 | 389.63 390.77 | 389.54 390.74 |

DATE: 19-Mar-07 15:27
FILE: P:\03\0347000l\Cad\Phase II\4700lppll.dgn

| FAU | SECTION | COUNTY | TOTAL SHEETS | SHEET NO. |
|---|---|---|---|---|
| 9713 | 99-02118-00-FP | JACKSON | 122 | 27 |
| STA. 74+00 | TO STA. 80+00 | | | |
| FED. ROAD DIST. NO. | ILLINOIS | FED. AID PROJECT | | |

CONTRACT NO. 99219

| PLAN | | BY | DATE |
|---|---|---|---|
| NOTE BOOK | SURVEYED | RAPIER | 2-26-01 |
| NO. | PLOTTED | TIM | 4-25-01 |
| | ALIGNMENT CHECKED | | |
| | RT. OF WAY CHECKED | | |
| | CADD FILE NAME | 6100PPL.DGN | |

| PROFILE | | BY | DATE |
|---|---|---|---|
| NOTE BOOK | SURVEYED | | |
| NO. | PLOTTED | | |
| | GRADES CHECKED | | |
| | B.M. NOTED | | |
| | STRUCTURE NOTAT'NS CH'KD | | |

DATE: 19-Mar-07 15:28
FILE: P:\03\03470001\Cad\Phase II\4700lppl2.dgn

| FAU | SECTION | COUNTY | TOTAL SHEETS | SHEET NO. |
|---|---|---|---|---|
| 9713 | 99-02118-00-FP | JACKSON | 122 | 28 |
| STA. 80+00 | TO STA. 86+00 | | | |
| FED. ROAD DIST. NO. | ILLINOIS | FED. AID PROJECT | | |

CONTRACT NO. 99219

MATCH LINE STA. 80+00

+37.82' 70.00' RT.

TEMPORARY EASEMENT LINE

+00.00 80.00' LT.

+00.00 70.00' LT.

+38.22 70.00' LT.

+38.22 50.00' LT.

+95.26 70.00' LT.

PARCEL 25
BILL J. & FAYE MARTIN (2/3 INTEREST)
ROBERT & BETTY MARTIN (1/3 INTEREST)

℄ PROPOSED IMPROVEMENT

CONSTRUCTION LIMITS

PROPOSED R.O.W. LINE

WETLANDS SITE 5
AREA 1
53 SQ. FT.

EXISTING R.O.W. LINE

STREAM

+48.65 47.41' LT.

70°

81

82

EAST PLEASANT HILL ROAD

WETLANDS SITE 3
AREA 2
4 SQ. FT.

82+38.08 12' LT.

+31.46 35.00 RT.

+50.00 35.00 RT.

81+53.96 12' RT.

RIFFLE SEE SHEET 34

EXISTING R.O.W. LINE

+50.00 60.00 RT.

+50.00 85.00 RT. PARCEL 26
MATTHEW MICHAEL &
AMY LYN WRIGHT

+99.38 84.00 RT.

STA. 80+95 (SN 039-3254) SPECIAL BRIDGE DESIGN
PRECAST PRESTRESSED CONCRETE DECK BEAM
BRIDGE, SINGLE SPAN @ 50'-0"
40'-6" ROADWAY; SKEW = 20° RT. AH

+50.00 84.00 RT.

PROPOSED R.O.W. LINE

CONSTRUCTION LIMITS

**CURVE #5**
**CURVE DATA**
PI STA. 81+47.63
Δ = 25° 23' 08.10" (LT.)
D = 7° 30' 00.00"
R = 763.94'
T = 172.06'
L = 338.47'
E = 19.14
PC STA. 79+75.57
PT STA. 83+14.04
TRANSITION
STA. 78+72.05 TO STA. 80+03.41
STA. 82+86.20 TO STA. 83+97.56
S.E. = 4.5%

WETLANDS SITE 5
AREA 2
949 SQ. FT.

+14.04 70.00' LT.

+55.02 70.00 LT.

PT STA. 83+14.04

2CC
60'-400'
12' O/S

93+50.00 70.00 RT.

93+92.12 60.00 RT.

93+64.32

93+76.23 30' RT.

12' 12' 6' 6' 12' 3' 3'

93+64.32

83+76.39 25.81' LT.

8'

12'

24'

83+14.04 24' RT.

83+65.82 24' RT.

83+03.96 24' RT.

2CC 1B
60'-400'
12' O/S

1B

1A

+00.00 58.00' RT.

95+30.82 30.82' RT.

6'

STREAM

POT STA. 84+57.16

86°27'51"

50' R

30' R

GIANT CITY ROAD

94

95

2A

2B

93+92.12 50.00' LT.

94+00.00 38.00' LT.

¾" PVC TRENCH
2 #10 1/C
1 #10 1/C GND

94+25.00 50.00 LT.

94+25.00 85.00 LT.

PARCEL 25
BILL J. & FAYE MARTIN (2/3 INTEREST)
ROBERT & BETTY MARTIN (1/3 INTEREST)

EAST PLEASANT HILL ROAD STA. 84+57.16
GIANT CITY ROAD STA. 94+65.98

F.E. +54.20
16" GRASS

TEMP. EASEMENT

95+00.00 85.00 LT.

95+00.00 50.00 LT.

PROPOSED R.O.W. LINE

CONSTRUCTION LIMITS

¾" PVC PUSHED AND
¾" PVC TRENCH
2 #10 1/C
1 #10 1/C GND

0 20' 40'
GRAPHIC SCALE

LEGEND

1 A.R., STA. 82+88.00
8'x 5'x 42' BOX CULVERT. TO BE REMOVED.

LEGEND

TREE REMOVAL ACRE

N

+00.00 85.00' RT.

+61.29 92.17' RT

RIFFLE SEE SHEET 34

AGGREGATE DITCH SEE SHEET 45 FOR QUANTITIES

A.R. STA. 82+70
PIPE CULVERT TYPE 2 R.C.C.P. 24"
115 FT. LONG
U.S.F.L. AT END OF FLARED END SECTION
53.9' LT. STA. 82+70 ELEV. 381.27
D.S.F.L. AT END OF FLARED END SECTION
73.0' RT. STA. 82+70 ELEV. 380.49
END SECTIONS 24" = 2 EACH
C.L.S.M. = 217.8 CU.YD.

+05.58 137.49' RT.

+14.04 130.00' RT.

MECHANIZED LAND CLEARING EQUIPMENT WILL NOT BE ALLOWED FOR TREE REMOVAL IN THE DESIGNATED WETLAND AREAS

PROFILE

410 405 400 395 390 385 380 375 370

EXISTING ℄ GRADE

PROPOSED ℄ GRADE

VPI STA. 82+04.56
ELEV. 390.73

100 YR. H.W. ELEV. 386.2
30 YR. H.W. ELEV. 385.6
TOP OF BERM ELEV. 386.0

+0.00%

+1.88%

K = 80
150' V.C.

+1.55%

+1.47%

STA. 84+39.13 ELEV. 395.14

STA. 84+45.58 ELEV. 395.24

STA. 87+57.16 ELEV. 395.41

SPECIAL DITCH RIGHT

383.53 RT.

-0.30%

383.68 RT.

-0.50%

381.40 LT. @ 80+65

381.08 LT.

SPECIAL DITCH LEFT

382.50 RT.

F.L. EL. 381.0

CHANNEL EXCAVATION

381.80 LT.

-2.06%

380.97 RT.

2:1 @ RT ℄'S

SPECIAL DITCH LEFT

381.50 LT.

-0.29%

-0.32%

24" RCCP

REMOVE EXISTING 8X5 BOX CULVERT

SPECIAL DITCH RIGHT

84+07.66
379.90 RT.

389.06 390.73 | 389.06 390.73 | 389.07 390.73 | 389.09 390.73 | 389.11 | 389.15 | 389.21 | 389.27 390.74 | 389.33 390.79 | 389.40 390.89 | 389.46 391.04 | 389.50 391.24 | 389.53 391.49 | 389.56 391.80 | 389.70 392.15 | 389.86 392.52 | 390.55 392.90 | 391.24 393.28 | 391.94 393.65 | 392.64 394.03 | 393.35 394.40 | 394.14 394.78 | 394.81 395.15

80+00 80+40 80+80 81+20 81+60 82+00 82+40 82+80 83+20 83+60 84+00 84+40

DATE: 19-Mar-07 15:29
FILE: P:\03\0347000i\Cad\Phase II\4700lppl3.dgn

| FAU | SECTION | COUNTY | TOTAL SHEETS | SHEET NO. |
|---|---|---|---|---|
| 9713 | 99-02118-00-FP | JACKSON | 122 | 29 |
| STA. 300+00 | | TO STA. 305+00 | | |
| FED. ROAD DIST. NO. | ILLINOIS | FED. AID PROJECT | | |

CONTRACT NO. 99219

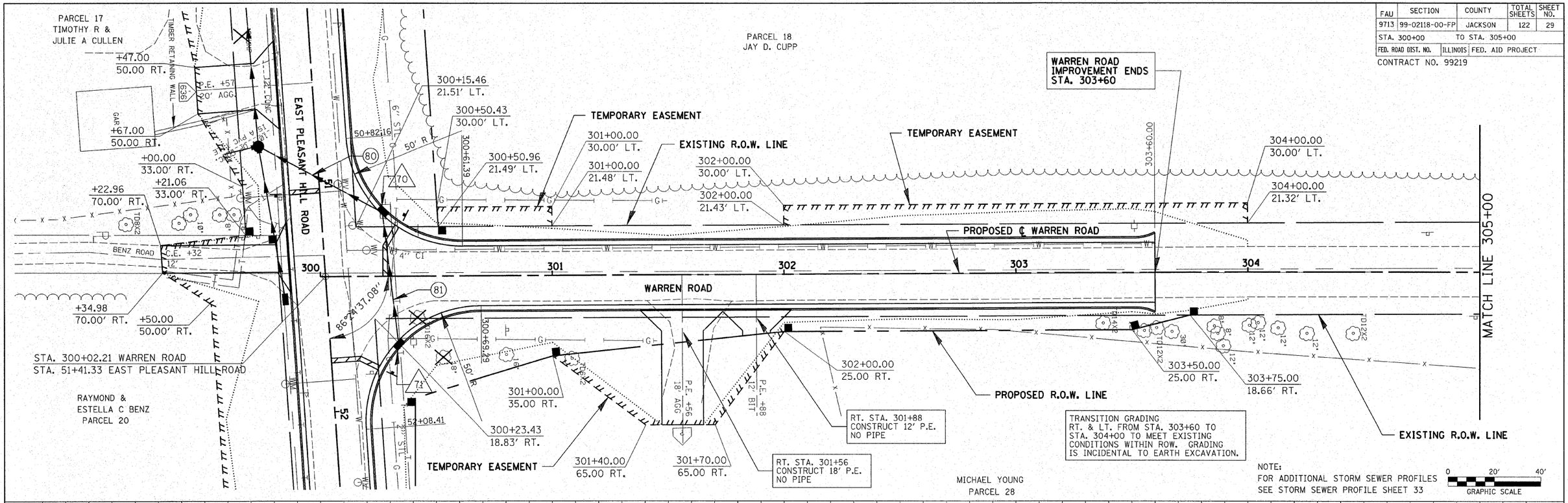


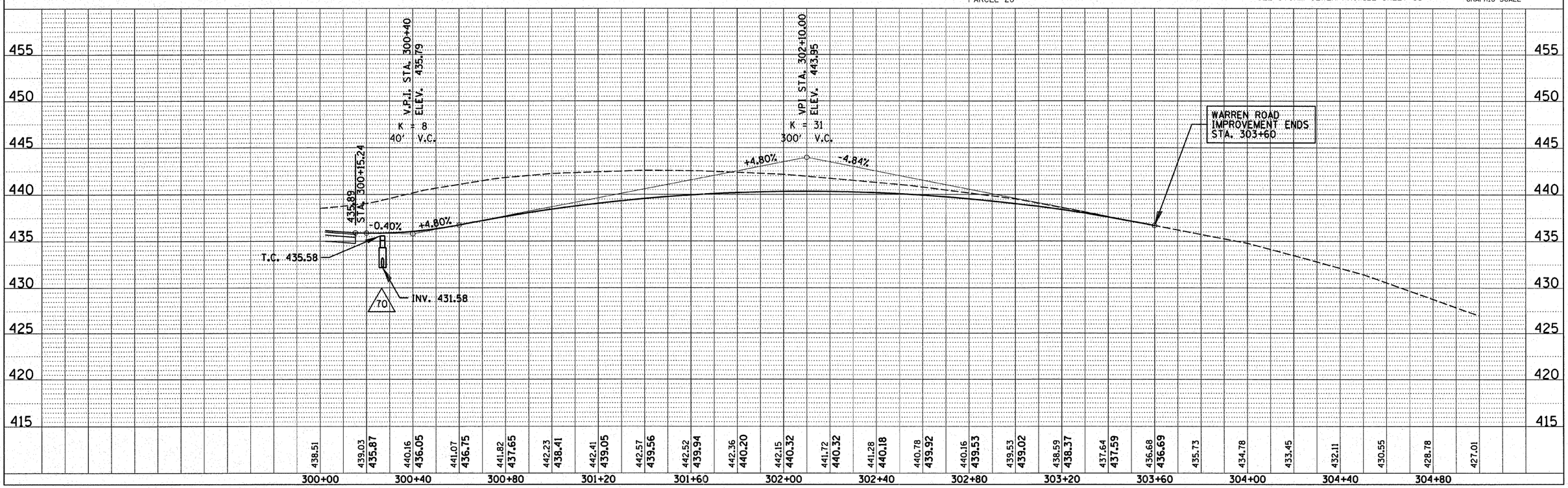


DATE: 19-Mar-07 15:30
FILE: P:\03\0347000\Cad\Phase II\4700lpplwar.dgn

WARREN ROAD

| FAU | SECTION | COUNTY | TOTAL SHEETS | SHEET NO. |
|---|---|---|---|---|
| 9713 | 99-02118-00-FP | JACKSON | 122 | 30 |
| STA. 88+86.23 | TO STA. 95+00 | | | |
| FED. ROAD DIST. NO. | ILLINOIS | FED. AID PROJECT | | |

CONTRACT NO. 99219

DATE: 19-Mar-07 15:32
FILE: P:\03\03470001\Cad\Phase II\4700lgcityppl.dgn

GIANT CITY ROAD

| FAU | SECTION | COUNTY | TOTAL SHEETS | SHEET NO. |
|---|---|---|---|---|
| 9713 | 99-02118-00-FP | JACKSON | 122 | 31 |
| STA. 95+00 | | TO STA. 101+00 | | |
| FED. ROAD DIST. NO. | ILLINOIS | FED. AID PROJECT | | |

CONTRACT NO. 99219

PLAN — SURVEYED / DRAWN / ALIGNMENT CHECKED / GRADES TAKEN / NOTE BOOK / NO. / BY / DATE

PROFILE — SURVEYED / DRAWN / GRADES CHECKED / STA. NO. ADJ. / PROFILE NOTATIONS CHKD

PARCEL 25
BILL J. & FAYE MARTIN (2/3 INTEREST)
ROBERT & BETTY MARTIN (1/3 INTEREST)
95+00.00
85.00' LT.
+00.24
85.00' LT.
PROPOSED R.O.W. LINE
95+00.00
50.00' LT.
MATCH LINE STA. 95+00
LT. STA 97+49
CONSTRUCT 12' PE
NO PIPE
P.E. 97+49
12" BIT
EXISTING R.O.W. LINE
EXISTING R.O.W. LINE
WETLANDS SITE 9
R 15'
R 15'
PROPOSED 3' AGG. SHLDR.
PROPOSED 3' H.M.A. SHLDR.
℄ PROPOSED IMPROVEMENT
MATCH LINE STA. 101+00
GIANT CITY ROAD
95+30.82
30.82' RT.
96+08.78
96+10.34
97+88.78
100+88.78
PROPOSED 3' AGG. SHLDR.
PROPOSED 3' H.M.A. SHLDR.
84+05.58
137.49' RT.
8' PVC
35'-0"
AGGREGATE DITCH SEE SHEET 45 FOR QUANTITIES
EXISTING R.O.W. LINE
WETLANDS SITE 8
PROPOSED R.O.W. LINE
MATTHEW MICHAEL & AMY LYN WRIGHT
PARCEL 26

LEGEND
(1) A.R., STA. 95+56.18
12' x 8' DOUBLE BOX CULVERT TO BE EXTENDED.
SEE CULVERT EXTENSION DRAWINGS.

LEGEND
TREE REMOVAL ACRE
AGGREGATE DITCH

0 20' 40'
GRAPHIC SCALE

MECHANIZED LAND CLEARING EQUIPMENT WILL NOT BE ALLOWED FOR TREE REMOVAL IN THE DESIGNATED WETLAND AREAS

WIDENING & RESURFACING
WIDENING & RESURFACING
WIDENING ENDS STA. 100+88.78
PAVEMENT TRANSITION
EXISTING 12' x 8' BOUBLE BOX CULVERT

405 400 395 390 385 380 375 370 365

395.14 395.14 395.14 395.14 395.11 395.08 395.04 395.00 394.97 394.97 394.99 395.00 395.02 395.07 395.09 395.10 395.10 395.11 395.12 395.16 395.15 395.14 395.12 395.11 395.12 395.14 395.16 395.18 395.20 395.23 395.26

95+20 95+60 96+00 96+40 96+80 97+20 97+60 98+00 98+40 98+80 99+20 99+60 100+00 100+40 100+80

DATE: 20-Mar-07 14:01
FILE: P:\03\0347000I\Cad\Phase II\4700lgcitypp2.dgn

GIANT CITY ROAD

| FAU | SECTION | COUNTY | TOTAL SHEETS | SHEET NO. |
|---|---|---|---|---|
| 9713 | 99-02118-00-FP | JACKSON | 122 | 32 |
| STA. 101+00 | | TO STA. 104+00 | | |
| FED. ROAD DIST. NO. | ILLINOIS | FED. AID PROJECT | | |

CONTRACT NO. 99219

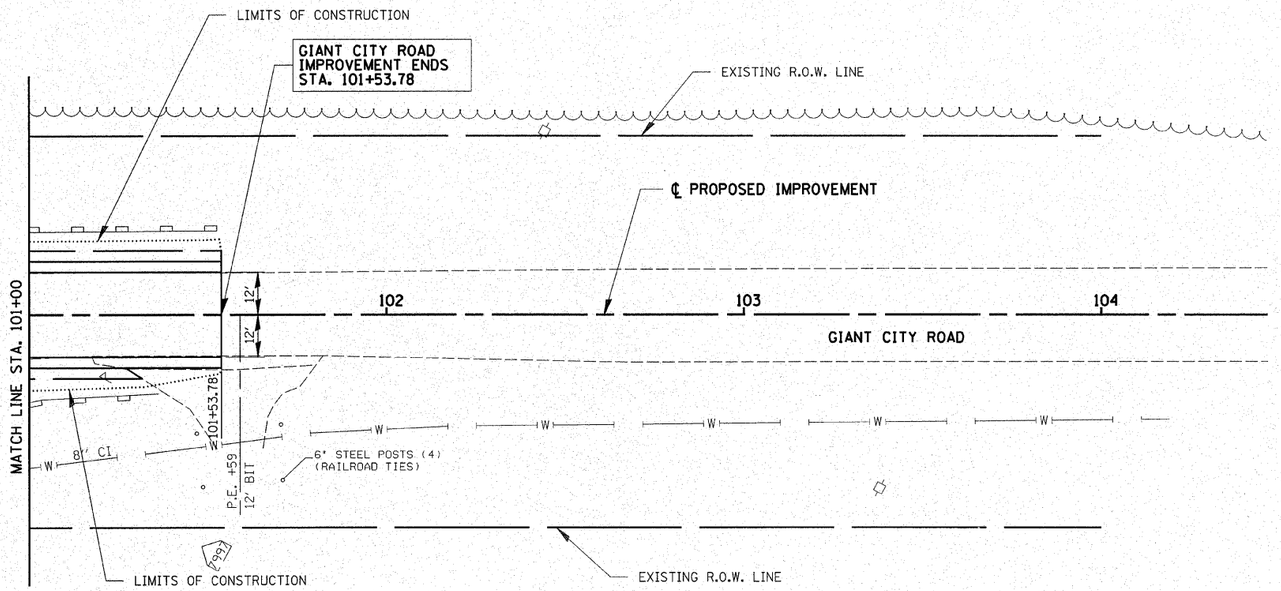


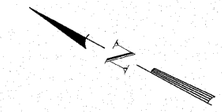


0 20' 40'
GRAPHIC SCALE

PLAN
NOTE BOOK NO.
SURVEYED
PLOTTED
ALIGNMENT CHECKED
RT. OF WAY CHECKED
CADD FILE NAME
BY
DATE

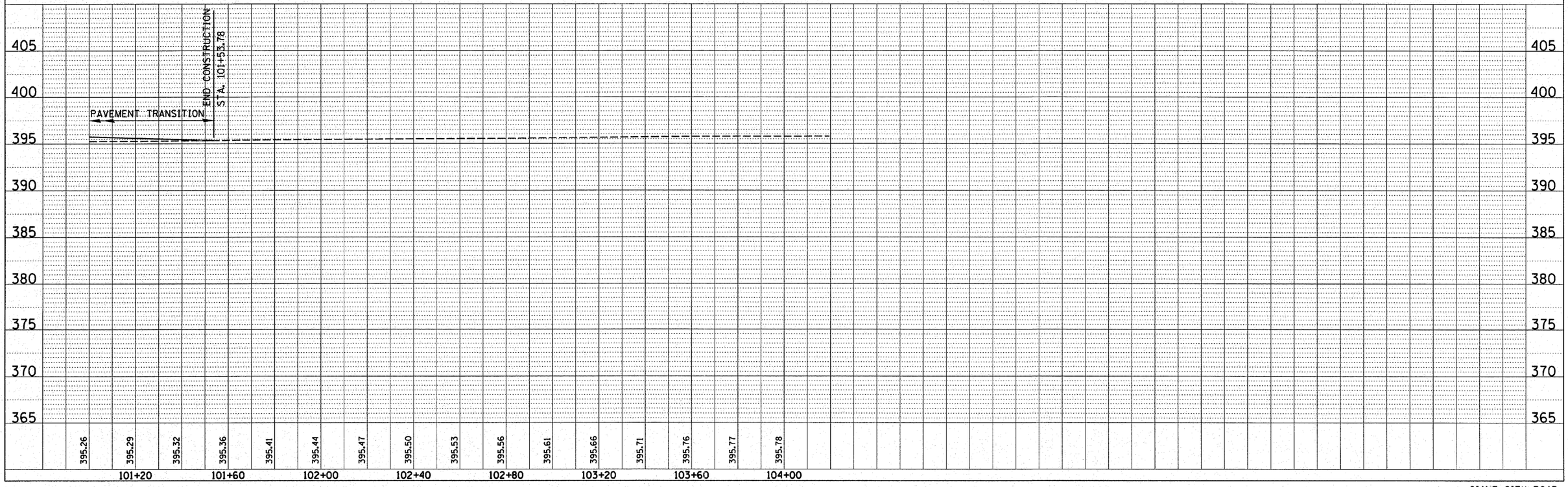


PROFILE
NOTE BOOK NO.
SURVEYED
PLOTTED
GRADES CHECKED
B.M. NOTED
STRUCTURE NOTAT'NS CHK'D
BY
DATE

GIANT CITY ROAD

| FAU | SECTION | COUNTY | TOTAL SHEETS | SHEET NO. |
|---|---|---|---|---|
| 9713 | 99-02118-00-FP | JACKSON | 122 | 33 |
| STA. | TO STA. | | | |
| FED. ROAD DIST. NO. | ILLINOIS | FED. AID PROJECT | | |

CONTRACT NO. 99219

NOTE:
PROFILES ARE SHOWN
ALONG STORM SEWER RUNS

FINAL SURVEY — NOTE BOOK — NO. — BY — DATE
SURVEYED — PLOTTED — TYPED — AREAS — AREAS CHECKED

ORIGINAL SURVEY — NOTE BOOK — NO. — BY — DATE
SURVEYED — PLOTTED — TYPED — AREAS — AREAS CHECKED

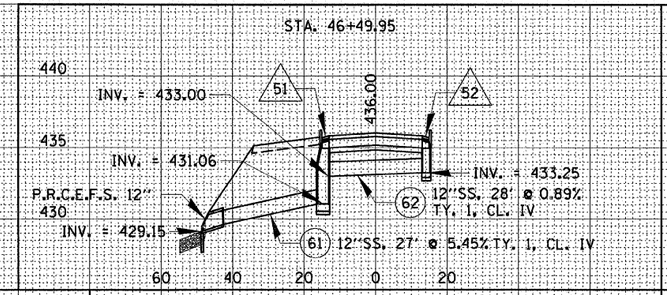


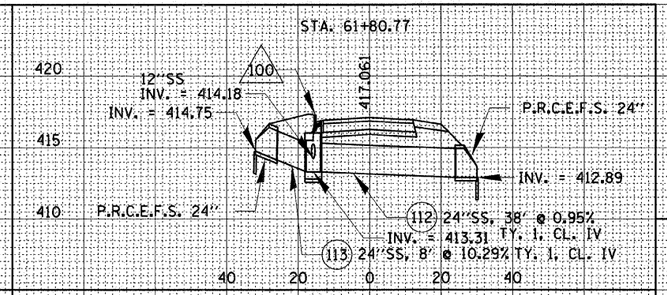


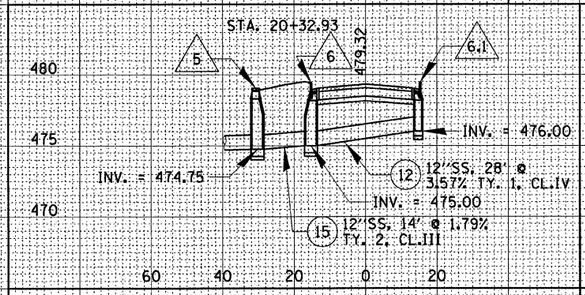


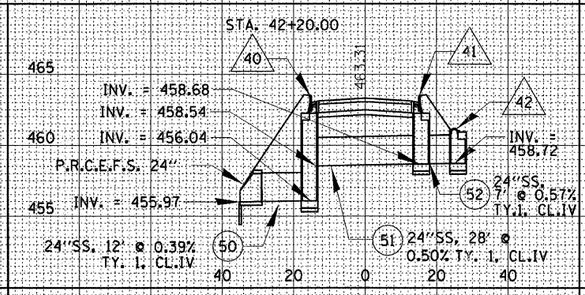


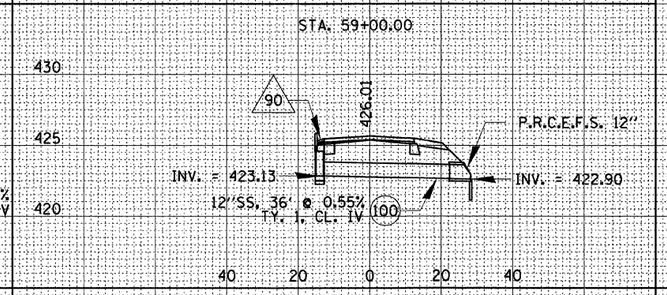


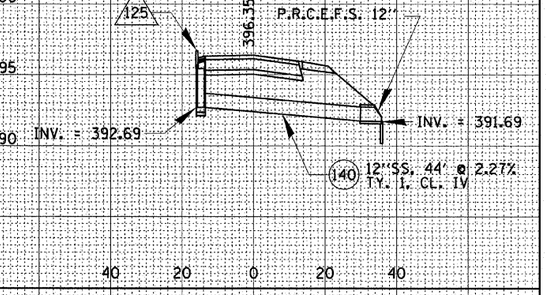


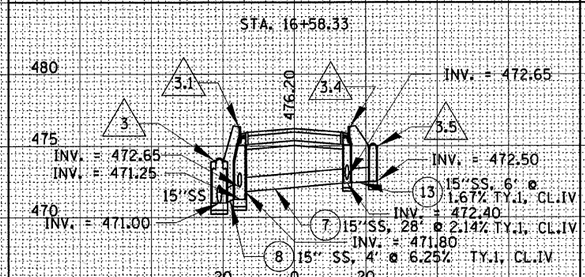


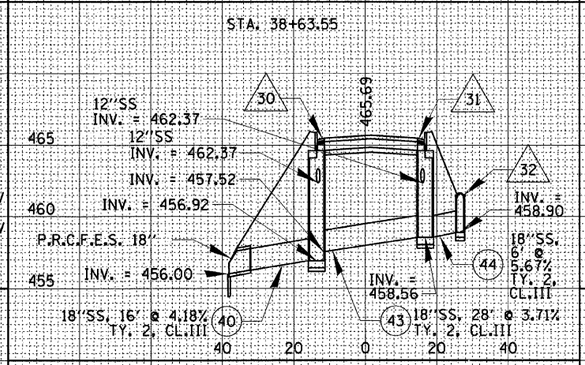


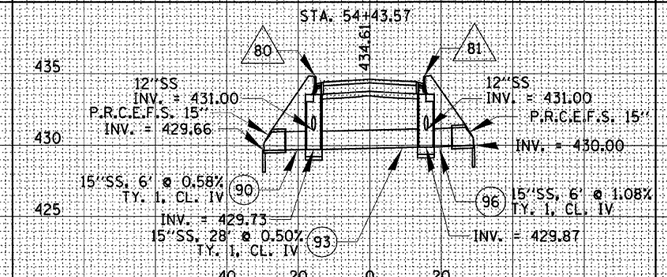


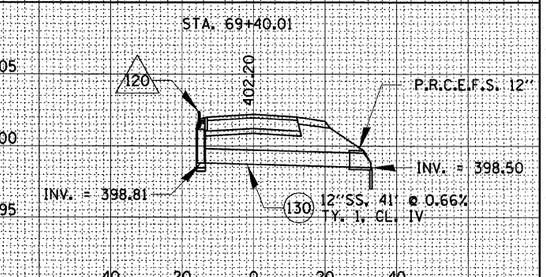


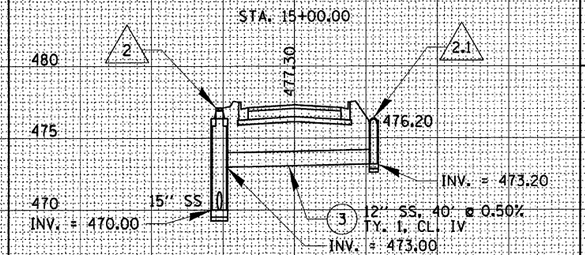


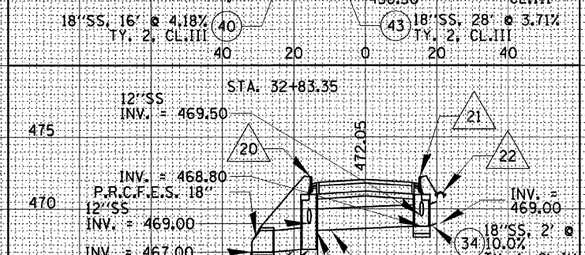


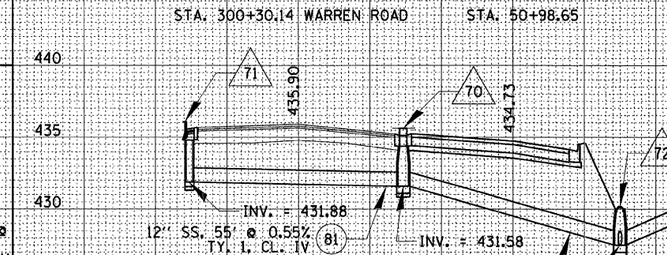


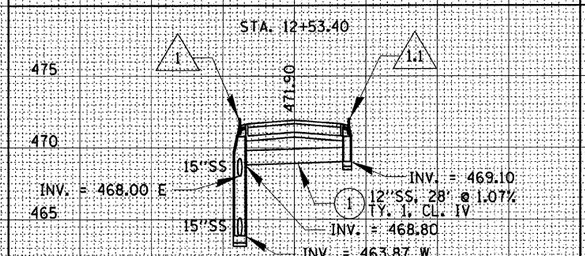


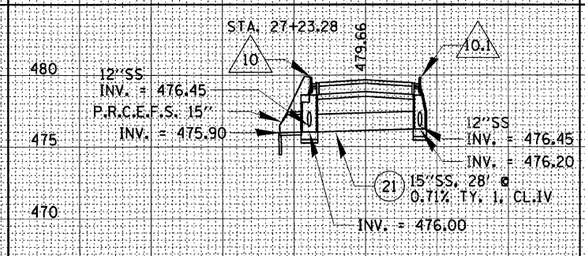


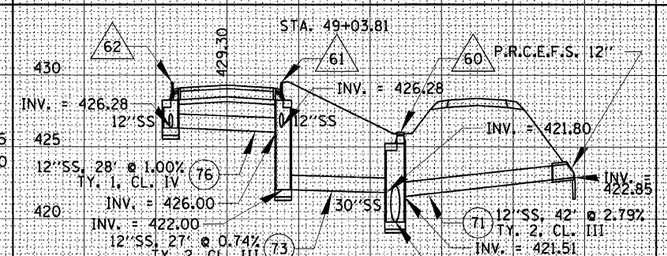


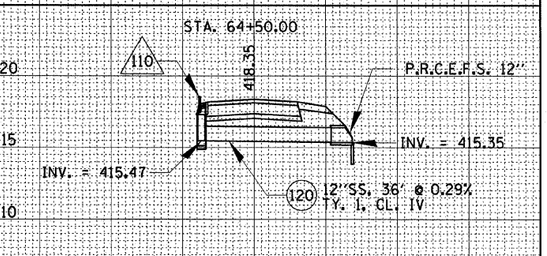

| ROUTE | SECTION | COUNTY | TOTAL SHEETS | SHEET NO. |
|---|---|---|---|---|
| FAU 9713 | 99-02118-00-FP | JACKSON | 122 | 34 |
| FED. ROAD DIST. NO. | | ILLINOIS | FED. AID PROJECT- | |

CONTRACT NO. 99219

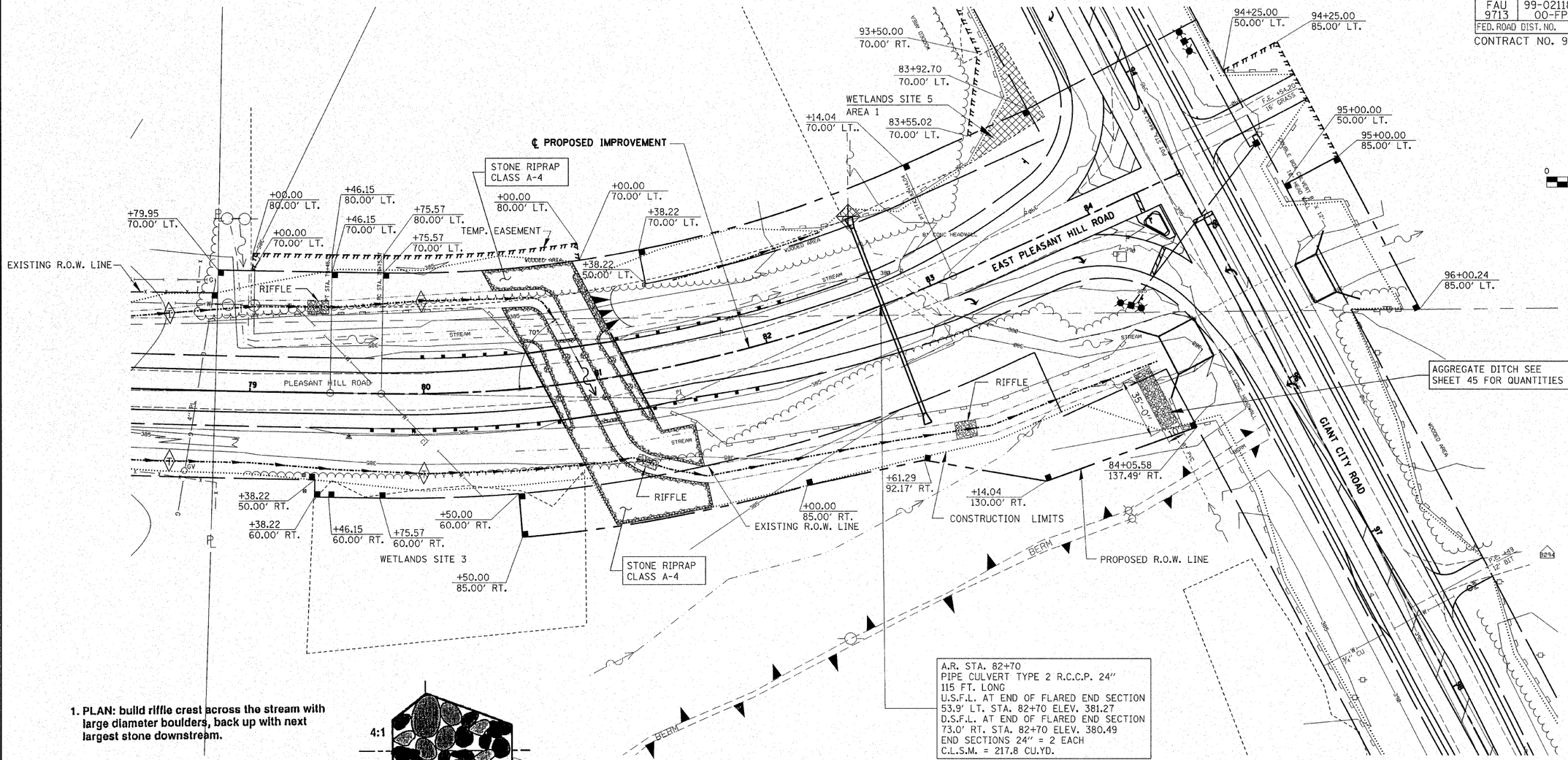


1. **PLAN:** build riffle crest across the stream with large diameter boulders, back up with next largest stone downstream.

2. **PROFILE:** construct downstream face of riffle at 20:1 slope and upstream face at 4:1 slope.

3. **CROSS-SECTION:** V-shape crest down towards the centre of channel.

4. **SURFACE:** space large surface rocks 8" to 12" apart on the downstream face of the riffle to form low flow fish passage channels.

5. **BANKS:** rip-rap banks with embedded rock to the floodplain level on both sides of the riffle.

6. **RIFFLES:** construction of riffels including stone riprap class A4 is to be considered as incidental to Earth Excavation.

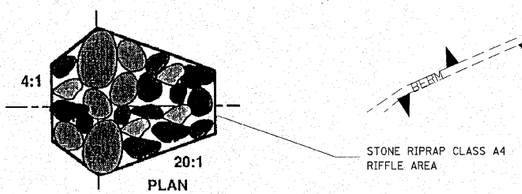


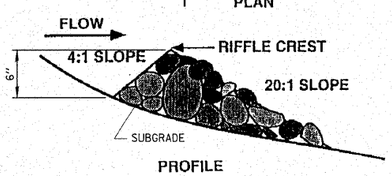


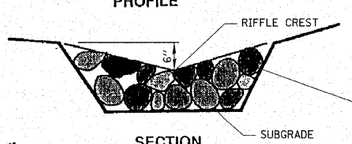


| RIFFLE LOCATION |
|---|
| STA. 79+38.00 LT. |
| STA. 81+20.00 RT. |
| STA. 82+87.00 RT. |


Rice, Berry and Associates
A Division of Hampton, Lenzini and Renwick, Inc.
Civil & Structural Engineers
801 S. Durkin Drive
Springfield, Illinois 62704
217-546-3400

Account Number 03-47-0001-1
Date: 03-19-07
DESIGNED: L.F.S. | CHECKED: S.W.M. | DRAWN: W.J.S.


# STREAM PLAN

**SECTION 99-02118-00-FP**

**F.A.U. 9713 / EAST PLEASANT HILL ROAD**

**JACKSON COUNTY**

DATE: 20-Mar-07 11:24
FILE: P:\03\0347000l\Cad\Phase II\4700lcorps30.dgn

| ROUTE | SECTION | COUNTY | TOTAL SHEETS | SHEET NO. |
|---|---|---|---|---|
| FAU 9713 | 99-02118-00-FP | JACKSON | 122 | 35 |
| FED. ROAD DIST. NO. | | ILLINOIS | FED. AID PROJECT- | |

**CONTRACT NO. 99219**

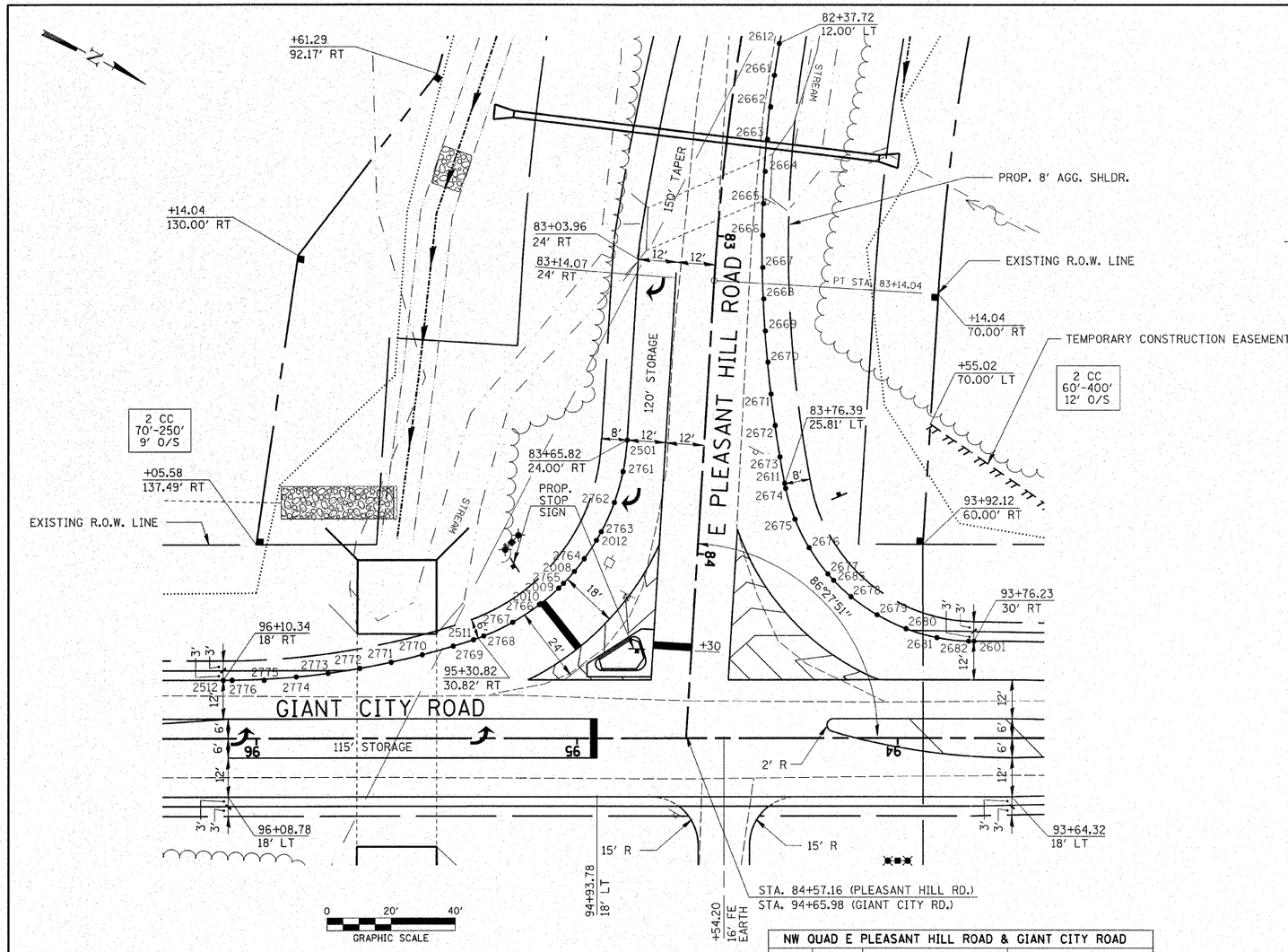


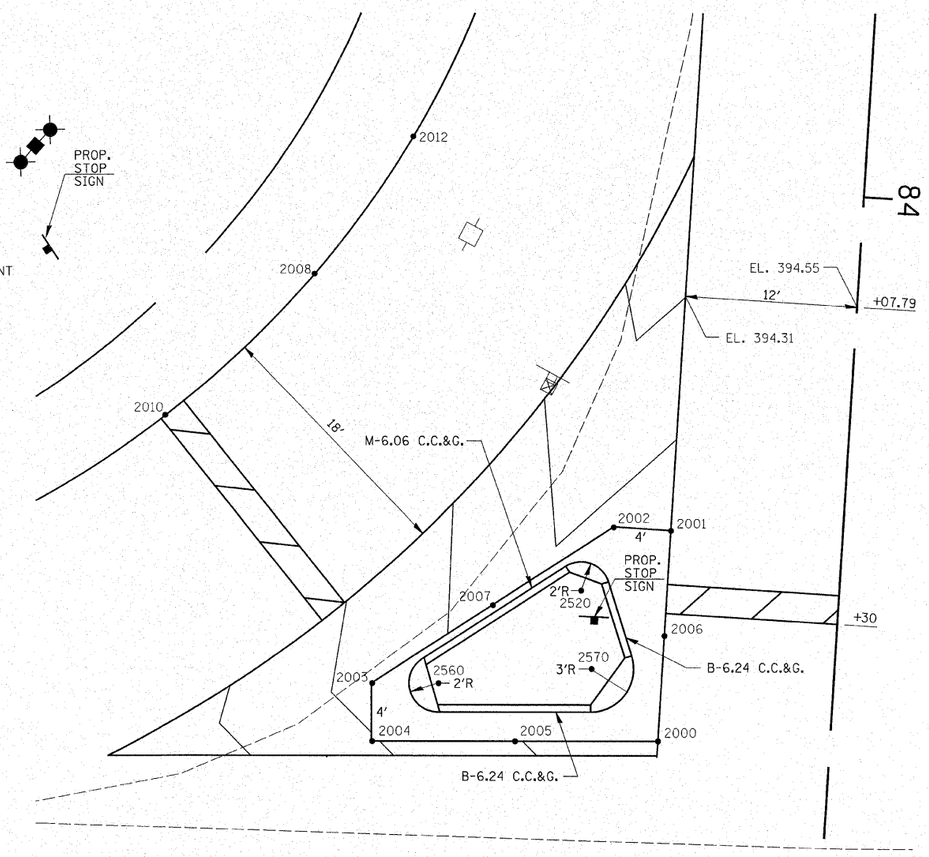


## INTERSECTION DETAIL

| SW QUAD E PLEASANT HILL ROAD & GIANT CITY ROAD | | | | | |
|---|---|---|---|---|---|
| POINT No. | ELEV. | E PLEASANT HILL | | GIANT CITY | |
| | | STA M.L. | OFF. M.L. | STA M.L. | OFF. M.L. |
| 2501 | 393.73 | 83+65.82 | 24.00 RT. | 94+84.27 | 92.66 RT. |
| 2761 | 393.76 | 83+75.78 | 24.71 RT. | 94+85.60 | 82.76 RT. |
| 2762 | 393.79 | 83+85.55 | 26.84 RT. | 94+88.32 | 73.15 RT. |
| 2763 | 393.75 | 83+94.91 | 30.33 RT. | 94+92.39 | 64.02 RT. |
| 2012 | 393.72 | 83+97.71 | 31.69 RT. | 94+93.92 | 61.31 RT. |
| 2764 | 393.87 | 84+03.68 | 35.12 RT. | 94+97.71 | 55.57 RT. |
| 2008 | 393.98 | 84+07.79 | 37.98 RT. | 95+00.82 | 51.64 RT. |
| 2765 | 394.09 | 84+11.67 | 41.11 RT. | 95+04.19 | 47.95 RT. |
| 2009 | 394.14 | 84+13.23 | 42.50 RT. | 95+05.68 | 46.48 RT. |
| 2010 | 394.30 | 84+18.39 | 47.78 RT. | 95+11.26 | 41.67 RT. |
| 2766 | 394.31 | 84+18.74 | 48.18 RT. | 95+11.68 | 41.34 RT. |
| 2767 | 394.53 | 84+24.72 | 56.18 RT. | 95+20.04 | 35.87 RT. |
| 2768 | 394.75 | 84+29.51 | 64.95 RT. | 95+29.09 | 31.63 RT. |
| 2511 | 394.82 | 84+30.83 | 68.06 RT. | 95+32.28 | 30.50 RT. |
| 2769 | 394.85 | 84+33.20 | 74.24 RT. | 95+38.59 | 28.52 RT. |
| 2770 | 394.90 | 84+36.47 | 83.69 RT. | 95+48.22 | 25.84 RT. |
| 2771 | 394.94 | 84+39.36 | 93.26 RT. | 95+57.95 | 23.55 RT. |
| 2772 | 394.97 | 84+41.87 | 102.94 RT. | 95+67.77 | 21.65 RT. |
| 2773 | 395.00 | 84+43.98 | 112.72 RT. | 95+77.66 | 20.15 RT. |
| 2774 | 395.01 | 84+45.71 | 122.57 RT. | 95+87.60 | 19.04 RT. |
| 2775 | 395.02 | 84+47.03 | 132.48 RT. | 95+97.57 | 18.33 RT. |
| 2776 | 395.02 | 84+47.96 | 142.43 RT. | 96+07.56 | 18.02 RT. |
| 2512 | 395.02 | 84+48.15 | 145.20 RT. | 96+10.34 | 18.00 RT. |

| NW QUAD E PLEASANT HILL ROAD & GIANT CITY ROAD | | | | | |
|---|---|---|---|---|---|
| POINT No. | ELEV. | E PLEASANT HILL | | GIANT CITY | |
| | | STA M.L. | OFF. M.L. | STA M.L. | OFF. M.L. |
| 2612 | 390.92 | 82+37.72 | 12.00 LT. | 94+36.74 | 216.73 RT. |
| 2661 | 391.07 | 82+47.88 | 12.06 LT. | 94+38.22 | 206.84 RT. |
| 2662 | 391.21 | 82+58.04 | 12.23 LT. | 94+39.47 | 196.92 RT. |
| 2663 | 391.37 | 82+68.20 | 12.53 LT. | 94+40.46 | 186.97 RT. |
| 2664 | 391.54 | 82+78.36 | 12.94 LT. | 94+41.20 | 176.99 RT. |
| 2665 | 391.72 | 82+88.52 | 13.47 LT. | 94+41.70 | 167.01 RT. |
| 2666 | 391.97 | 82+98.68 | 14.11 LT. | 94+41.94 | 157.01 RT. |
| 2667 | 392.22 | 83+08.85 | 14.87 LT. | 94+41.94 | 147.01 RT. |
| 2668 | 392.47 | 83+18.91 | 15.76 LT. | 94+41.68 | 137.01 RT. |
| 2669 | 392.73 | 83+28.85 | 16.88 LT. | 94+41.17 | 127.07 RT. |
| 2670 | 392.88 | 83+38.75 | 18.25 LT. | 94+40.42 | 117.06 RT. |
| 2671 | 393.04 | 83+48.62 | 19.87 LT. | 94+39.42 | 107.11 RT. |
| 2672 | 393.18 | 83+58.44 | 21.74 LT. | 94+38.16 | 97.19 RT. |
| 2673 | 393.33 | 83+68.22 | 23.85 LT. | 94+36.66 | 87.30 RT. |
| 2611 | 393.44 | 83+76.39 | 25.81 LT. | 94+35.21 | 79.02 RT. |
| 2674 | 393.45 | 83+77.93 | 26.22 LT. | 94+34.90 | 77.46 RT. |
| 2675 | 393.51 | 83+87.30 | 29.70 LT. | 94+32.00 | 67.90 RT. |
| 2676 | 393.57 | 83+95.95 | 34.68 LT. | 94+27.57 | 58.95 RT. |
| 2677 | 393.63 | 84+03.66 | 41.04 LT. | 94+21.70 | 50.86 RT. |
| 2685 | 393.65 | 84+05.50 | 42.91 LT. | 94+19.95 | 48.91 RT. |
| 2678 | 393.83 | 84+10.20 | 48.58 LT. | 94+14.58 | 43.86 RT. |
| 2679 | 394.07 | 84+15.41 | 57.11 LT. | 94+06.39 | 38.14 RT. |
| 2680 | 394.31 | 84+19.13 | 66.38 LT. | 93+97.37 | 33.85 RT. |
| 2681 | 394.55 | 84+21.26 | 76.13 LT. | 93+87.76 | 31.12 RT. |
| 2682 | 394.79 | 84+21.74 | 86.11 LT. | 93+77.83 | 30.02 RT. |
| 2601 | 394.83 | 84+21.66 | 87.72 LT. | 93+76.23 | 30.00 RT. |

## ISLAND DETAIL

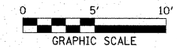


| EDGE OF PAVEMENT AROUND ISLAND | | | | | |
|---|---|---|---|---|---|
| POINT No. | ELEV. | E PLEASANT HILL | | GIANT CITY | |
| | | STA M.L. | OFF. M.L. | STA M.L. | OFF. M.L. |
| 2000 | 395.07 | 84+38.88 | 12.00 RT. | 94+76.82 | 19.00 RT. |
| 2006 | 394.76 | 84+31.56 | 12.00 RT. | 94+76.37 | 26.30 RT. |
| 2001 | 394.62 | 84+24.25 | 12.00 RT. | 94+75.91 | 33.60 RT. |
| 2002 | 394.55 | 84+24.25 | 16.00 RT. | 94+79.91 | 33.85 RT. |
| 2007 | 394.74 | 84+30.19 | 24.09 RT. | 94+88.35 | 28.42 RT. |
| 2003 | 394.93 | 84+36.12 | 32.18 RT. | 94+96.79 | 23.00 RT. |
| 2004 | 395.03 | 84+40.41 | 31.85 RT. | 94+96.73 | 19.00 RT. |
| 2005 | 395.05 | 84+39.64 | 21.93 RT. | 94+86.78 | 19.00 RT. |
| CENTER OF CURVES AROUND ISLAND | | | | | |
| 2520 | | 84+28.72 | 18.00 RT. | 94+82.18 | 29.50 RT. |
| 2560 | | 84+35.83 | 27.57 RT. | 94+92.17 | 23.00 RT |
| 2570 | | 84+34.18 | 17.00 RT | 94+81.52 | 24.00 RT |


Rice, Berry and Associates
A Division of Hampton, Lenzini and Renwick, Inc.
Civil & Structural Engineers
801 S. Durkin Drive
Springfield, Illinois 62704
217-546-3400


Account Number
03-47-0001-1

Date: 10-05-06

DESIGNED: L.F.S. | CHECKED: S.W.M. | DRAWN: W.J.S.

# INTERSECTION DETAILS

## SECTION 99-02118-00-FP

## F.A.U. 9713 / EAST PLEASANT HILL ROAD

## JACKSON COUNTY

| ROUTE | SECTION | COUNTY | TOTAL SHEETS | SHEET NO. |
|---|---|---|---|---|
| FAU 9713 | 99-02118-00-FP | JACKSON | 122 | 36 |
| FED. ROAD DIST. NO. | | ILLINOIS | FED. AID PROJECT- | |

CONTRACT NO. 99219

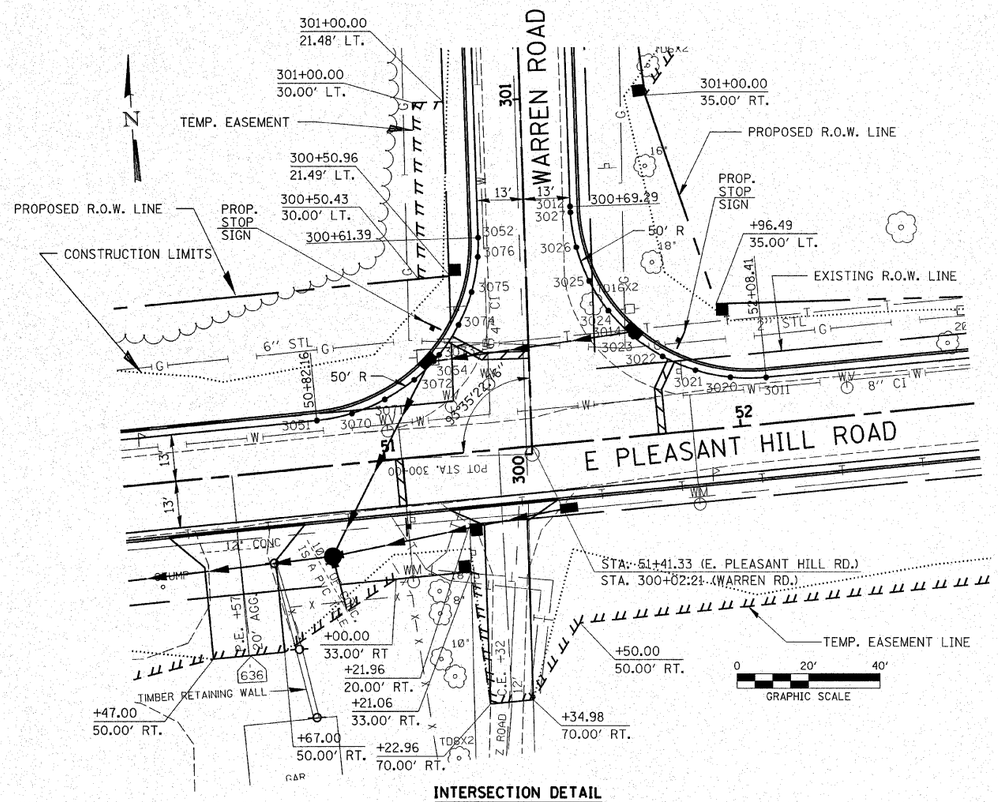


**INTERSECTION DETAIL**

| NW QUAD E PLEASANT HILL ROAD & WARREN ROAD | | | | | |
|---|---|---|---|---|---|
| POINT No. | ELEV. | E PLEASANT HILL | | WARREN | |
| | | STA M.L. | OFF. M.L. | STA S.R. | OFF. S.R. |
| 3051 | 433.87 | 50+82.16 | 13.00 LT | 300+11.48 | 59.87 LT |
| 3070 | 434.22 | 50+92.09 | 14.00 LT | 300+13.10 | 50.02 LT |
| 3071 | 434.58 | 51+01.63 | 16.95 LT | 300+16.64 | 40.68 LT |
| 3072 | 434.93 | 51+10.39 | 21.73 LT | 300+21.97 | 32.24 LT |
| 3054 | 435.20 | 51+16.39 | 26.56 LT | 300+27.16 | 26.56 LT |
| 3073 | 435.30 | 51+18.03 | 28.17 LT | 300+28.86 | 25.02 LT |
| 3074 | 435.60 | 51+24.23 | 35.99 LT | 300+37.06 | 19.32 LT |
| 3075 | 435.90 | 51+28.76 | 44.88 LT | 300+46.22 | 15.36 LT |
| 3076 | 436.30 | 51+31.43 | 54.50 LT | 300+55.99 | 13.29 LT |
| 3052 | 436.62 | 51+32.06 | 59.87 LT | 300+61.39 | 13.00 LT |

| NE QUAD E PLEASANT HILL ROAD & WARREN ROAD | | | | | |
|---|---|---|---|---|---|
| POINT No. | ELEV. | E PLEASANT HILL | | WARREN | |
| | | STA M.L. | OFF. M.L. | STA S.R. | OFF. S.R. |
| 3011 | 436.87 | 52+08.41 | 13.00 LT | 300+19.39 | 66.13 RT |
| 3020 | 436.67 | 51+98.47 | 14.00 LT | 300+19.76 | 56.15 RT |
| 3021 | 436.45 | 51+88.94 | 16.95 LT | 300+22.11 | 46.45 RT |
| 3022 | 436.23 | 51+80.17 | 21.73 LT | 300+26.34 | 37.41 RT |
| 3023 | 436.02 | 51+72.54 | 28.17 LT | 300+32.28 | 29.38 RT |
| 3014 | 436.00 | 51+71.96 | 28.77 LT | 300+32.84 | 28.77 RT |
| 3024 | 436.05 | 51+66.33 | 35.99 LT | 300+39.69 | 22.70 RT |
| 3025 | 436.15 | 51+61.80 | 44.88 LT | 300+48.29 | 17.63 RT |
| 3026 | 436.45 | 51+59.13 | 54.50 LT | 300+57.72 | 14.36 RT |
| 3027 | 436.92 | 51+58.43 | 64.46 LT | 300+67.62 | 13.03 RT |
| 3012 | 437.00 | 51+58.50 | 66.13 LT | 300+69.29 | 13.00 RT |


HLR
Rice, Berry and Associates
A Division of Hampton, Lenzini and Renwick, Inc.
Civil & Structural Engineers
801 S. Durkin Drive
Springfield, Illinois 62704
217-546-3400


Account Number
03-47-0001-1

Date: 01-18-07

| DESIGNED: L.F.S. | CHECKED: S.W.M. | DRAWN: W.J.S. |
|---|---|---|

# INTERSECTION DETAILS

**SECTION 99-02118-00-FP**

**F.A.U. 9713 / EAST PLEASANT HILL ROAD**

**JACKSON COUNTY**

| ROUTE | SECTION | COUNTY | TOTAL SHEETS | SHEET NO. |
|---|---|---|---|---|
| FAU 9713 | 99-02118-00-FP | JACKSON | 122 | 37 |
| FED. ROAD DIST. NO. | | ILLINOIS | FED. AID PROJECT- | |

CONTRACT NO. 99219

# URBAN ENTRANCE DETAILS

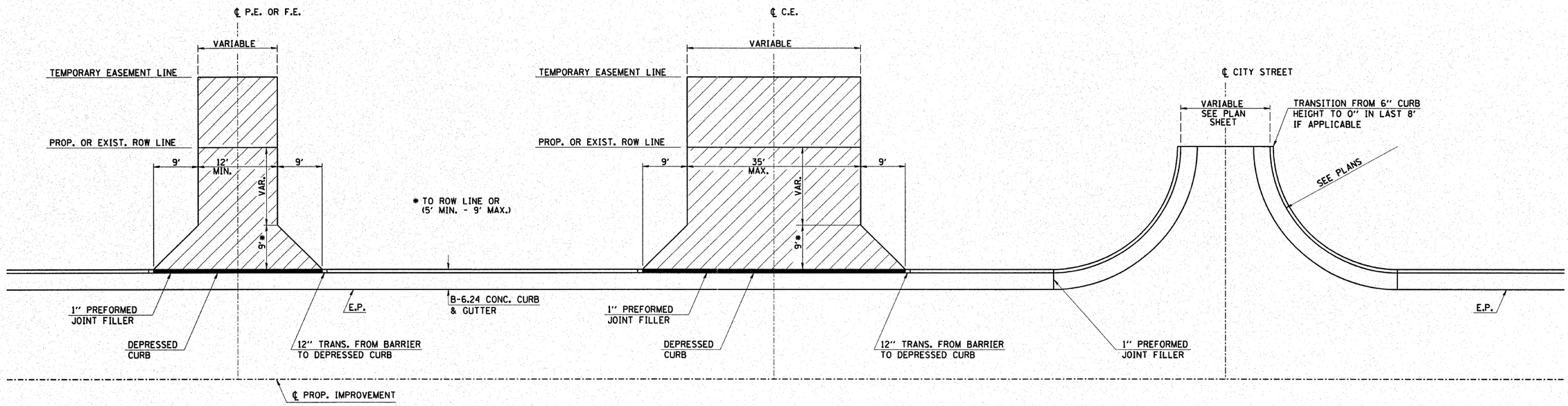


DETAILS P.E.'S & F.E.'S

DETAILS COMMERCIAL ENTRANCE

DETAILS CITY STREETS

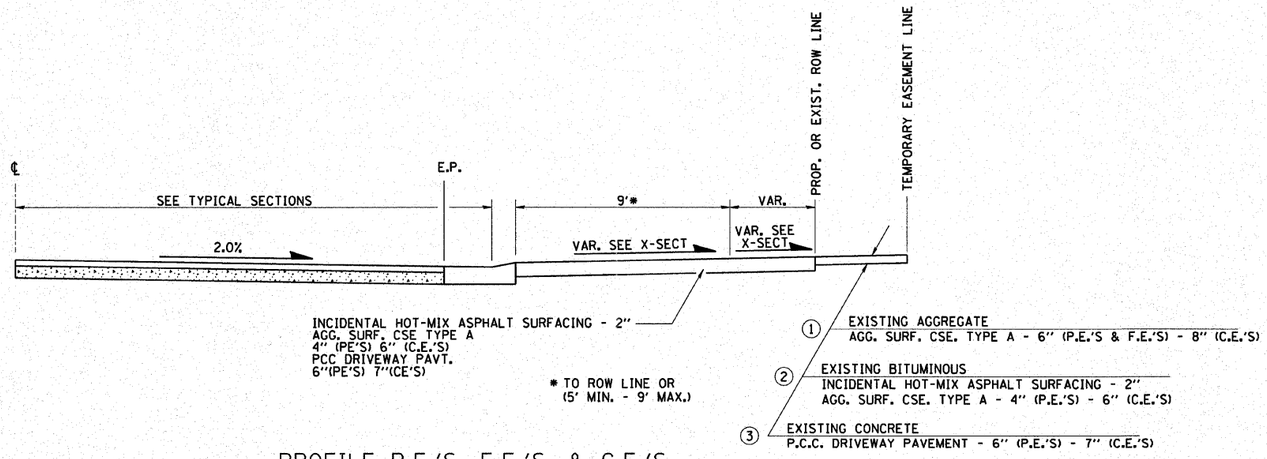


PROFILE P.E.'S, F.E.'S, & C.E.'S


Rice, Berry and Associates
A Division of Hampton, Lenzini and Renwick, Inc.
Civil & Structural Engineers
801 S. Durkin Drive
Springfield, Illinois 62704
217-546-3400


Account Number 03-47-0001-1

Date: 10-09-06

DESIGNED: L.F.S. | CHECKED: S.W.M. | DRAWN: W.J.S.

## URBAN ENTRANCE DETAILS

**SECTION 99-02118-00-FP**

**F.A.U. 9713 / EAST PLEASANT HILL ROAD**

**JACKSON COUNTY**

# RURAL SIDE APPROACH DETAILS

| ROUTE | SECTION | COUNTY | TOTAL SHEETS | SHEET NO. |
|---|---|---|---|---|
| FAU 9713 | 99-02118-00-FP | JACKSON | 122 | 38 |
| FED. ROAD DIST. NO. | | ILLINOIS | FED. AID PROJECT- | |

CONTRACT NO. 99219

## M.L. ENTRANCES

( P.E., F.E., & C.E. )

PLAN VEIW

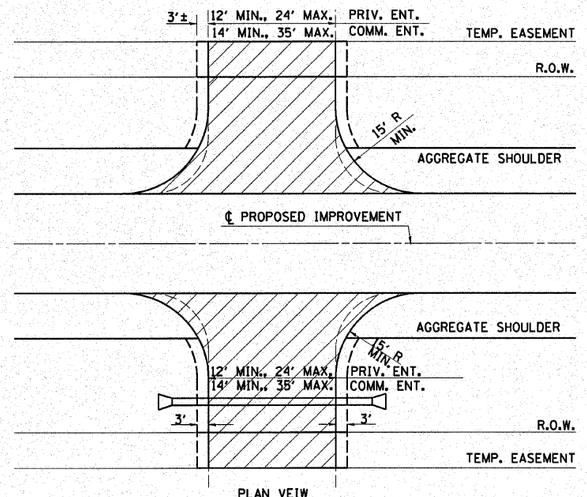


PLAN VEIW

SECTION VEIW

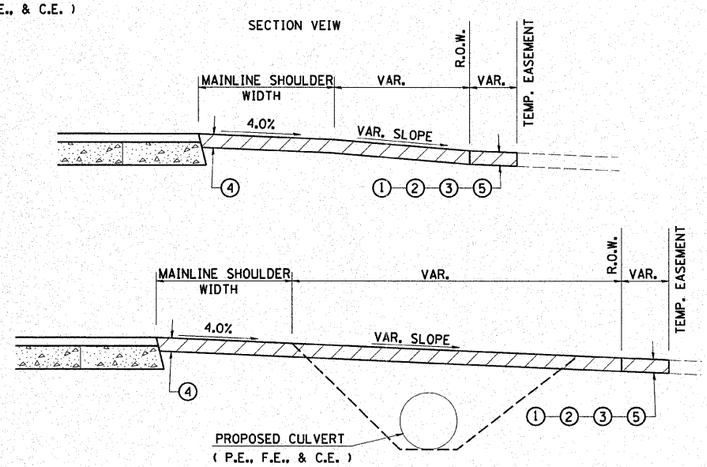


SECTION VEIW

## M.L. ENTRANCES

( P.E., F.E., & C.E. )
( PROPOSED CULVERT )

## GIANT CITY ROAD ENTRANCES

( P.E., F.E., & C.E. )

PLAN VEIW

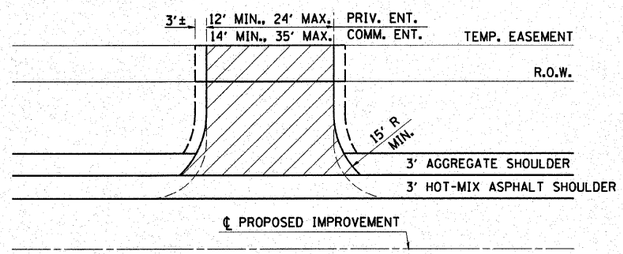


SECTION VEIW

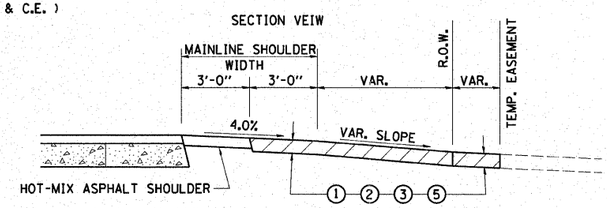


## GENERAL NOTES

1. ENTRANCE LOCATIONS ARE TO COMPLY WITH IDOT'S POLICY "ACCESS TO STATE HIGHWAYS".
2. IN GENERAL, RELOCATED PRIVATE ENTRANCES ARE TO HAVE A 16' WIDE SURFACE WITH 3' WIDE SHOULDERS (22' WIDE EMBANKMENT).
3. SEE PLANS FOR PROPOSED PROFILE GRADES AT ENTRANCES/SIDEROADS. THE DESIRABLE MAXIMUM PROFILE GRADE FOR ENTRANCES ARE 12% FOR PE; 10% FOR CE.
4. IF A FIELD ENTRANCE PIPE IS REQUIRED, PROVIDE A 22' WIDE EARTH EMBANKMENT WITH 15' RADII AT THE INTERSECTION.

   CONSTRUCT FIELD ENTRANCE SURFACE PER ①
5. SIDE SLOPES SHALL BE NO STEEPER THAN 4:1

## LEGEND

① EXISTING AGGREGATE.
AGGREGATE SURFACE COURSE TYPE A - 6" (P.E.'S & F.E.'S) - 8" (C.E.'S)

② EXISTING BITUMINOUS
INCIDENTAL HOT-MIX ASPHALT SURFACING - 2"
AGGREGATE SURFACE COURSE TYPE A - 4" (P.E.'S) - 6" (C.E.'S)

③ EXISTING CONCRETE.
P.C.C. DRIVEWAY PAVEMENT - 6" (P.E.'S) - 7" (C.E.'S)

④ INCIDENTAL HOT-MIX ASPHALT SURFACING - 2"
AGGREGATE SURFACE COURSE TYPE A - 4" (P.E.'S) - 6" (C.E.'S)

⑤ EXISTING EARTH TO REMAIN (F.E.'S)

## CURB TRANSITION DETAIL

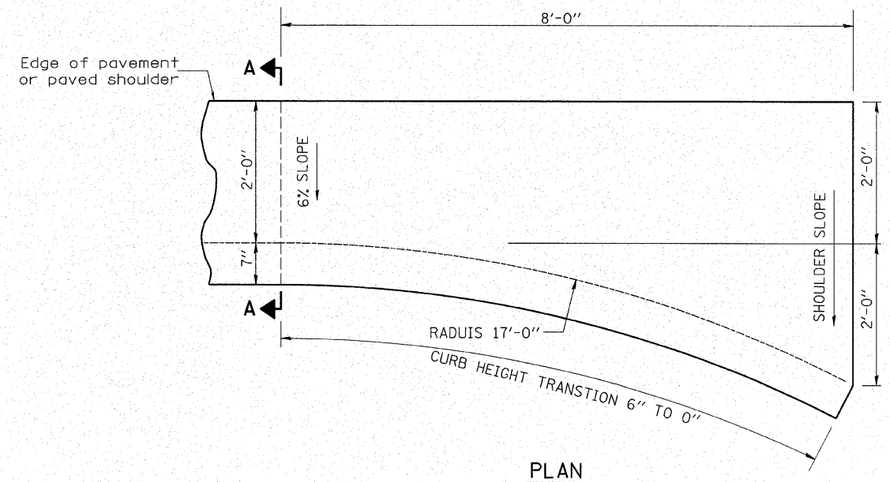


PLAN

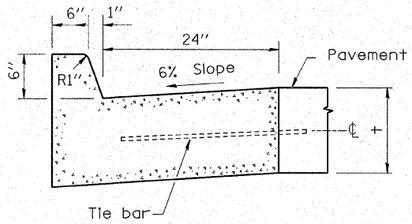


SECTION A-A

BARRIER CURB B6.24

Two 1-1/4"x18" dowel bars shall be installed in all joints when the gutter is constructed adjacent to flexible pavement.

The curb transition shall be measured along the edge of pavement and included in the quantity for combination concrete curb and gutter, type B-6.24.

The bottom slope of combination curb and gutter constructed adjacent to pcc pavement shall be the same slope as the subbase or 6% when subbase is omitted.

t = Thickness of pavement.

Longitudinal joint tie bars shall be No. 20 (No. 6) at 600 mm (24") centers in accordance with details for longitudinal construction joint shown on Standard 420001.

A minimum clearance of 50 mm (2") between the end of the tie bar and the back of the curb shall be maintained.


Rice, Berry and Associates
A Division of Hampton, Lenzini and Renwick, Inc.
Civil & Structural Engineers
801 S. Durkin Drive
Springfield, Illinois 62704
217-546-3400


Account Number
03-47-0001-1

Date: 03-20-07

DESIGNED: L.F.S. | CHECKED: S.W.M. | DRAWN: W.J.S.

## RURAL SIDE APPROACH & MISCELLANEOUS DETAILS

**SECTION 99-02118-00-FP**

**F.A.U. 9713 / EAST PLEASANT HILL ROAD**

**JACKSON COUNTY**

| ROUTE | SECTION | COUNTY | TOTAL SHEETS | SHEET NO. |
|---|---|---|---|---|
| FAU 9713 | 99-02118-00-FP | JACKSON | 122 | 39 |
| FED. ROAD DIST. NO. | | ILLINOIS | FED. AID PROJECT- | |

CONTRACT NO. 99219

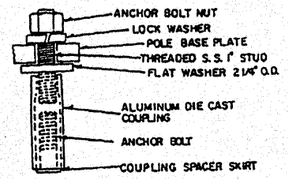


TYP BREAKAWAY COUPLING

LOW MOUNT DESIGN TABLE

| MOUNTING HEIGHT | FOUNDATION DEPTH | BOLT CIRCLE |
|---|---|---|
| 30' OR LESS | 5'-0" | 11 1/2" |
| 31' - 35' | 6'-0" | 11 1/2" |
| 36' - 40' | 7'-0" | 15" |
| 41' - 45' | 7'-6" | 15" |
| 46' - 50' | 8'-0" | 15" |

TABLE E

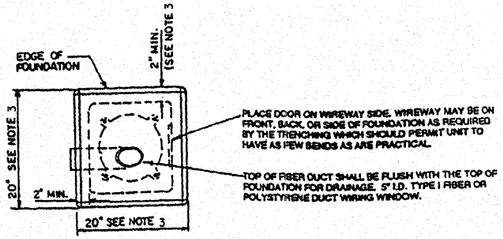


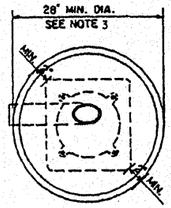


ALTERNATE FOUNDATION

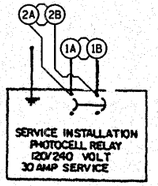


WIRING DIAGRAM

SCHEDULE FOR STEEL LIGHT POLES

| STATION | LIGHT NO | ACTUAL POLE LENGTH | SETBACK FROM E.P. |
|---|---|---|---|
| E. PLEASANT HILL RD STA. 84+00 58' RT. | 1A & 1B | 45' | 20' |
| GIANT CITY RD STA. 94+00 38' LT. | 2A & 2B | 45' | 20' |

LEGEND

- PROPOSED STEEL LIGHT POLE. 45' MH. TENON MOUNT. TWIN WITH 250 WATT SODIUM VAPOR LUMINAIRES, MULTI-MOUNT.
- PROPOSED SERVICE INSTALLATION PHOTOCELL RELAY.
- PROPOSED UNDERGROUND ELECTRICAL, AS NOTED.
- (1A) STEEL LIGHT POLE POSITION INDICATED BY THE NUMBER. THE LETTER INDICATES THE POSITION OF THE LUMINAIRE IN THE WIRE DIAGRAM.

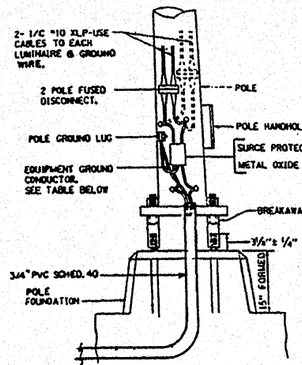


POLE BASE WIRING

EQUIPMENT GROUND-TABLE

| BREAKER SIZE | CONDUCTOR SIZE |
|---|---|
| 30 AMP. | #10 COPPER |
| 40 AMP. | #10 COPPER |
| 60 AMP. | #10 COPPER |
| 100 AMP. | #8 COPPER |

NOTES:

A. EACH LUMINAIRE SHALL HAVE A SEPARATE FUSED DISCONNECT

B. INSTALLATION INSTRUCTIONS:
SCREW COUPLINGS ON TO ANCHOR BOLTS TO END OF THREADS. LEVEL COUPLINGS. VERY IMPORTANT, AS COUPLINGS WILL BECOME OVERSTRESSED AND EITHER CRACK OR STRIP THREADS INSIDE COUPLING.

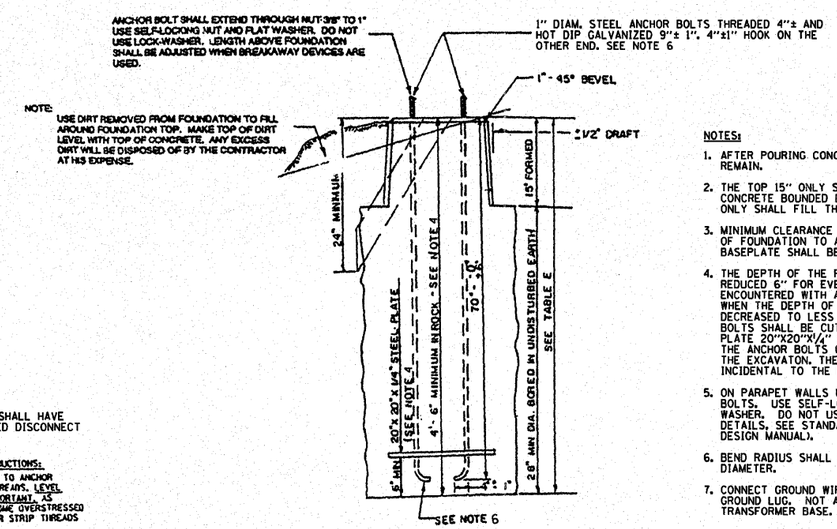


NOTES:

1. AFTER POURING CONCRETE THE FORM SHALL REMAIN.
2. THE TOP 15" ONLY SHALL BE FORMED. CONCRETE BOUNDED BY UNDISTRUBED EARTH ONLY SHALL FILL THE REMAINDER OF THE HOLE.
3. MINIMUM CLEARANCE FROM THE OUTSIDE EDGE OF FOUNDATION TO ANY PART OF THE POLE BASEPLATE SHALL BE 2"
4. THE DEPTH OF THE FOUNDATION MAY BE REDUCED 6" FOR EVERY FOOT OF ROCK ENCOUNTERED WITH A MINIMUM DEPTH OF 4'-6" WHEN THE DEPTH OF THE FOUNDATION IS DECREASED TO LESS THAN 6'-0" THE ANCHOR BOLTS SHALL BE CUT, THREADED, AND A STEEL PLATE 20"X20"X1/4" SHALL BE INSTALLED ON THE ANCHOR BOLTS 6" ABOVE THE BOTTOM OF THE EXCAVATION. THE COST SHALL BE INCIDENTAL TO THE FOUNDATION.
5. ON PARAPET WALLS USE 1 1/4" DIAM. ANCHOR BOLTS. USE SELF-LOCKING NUT AND FLAT WASHER. DO NOT USE LOCKWASHER (FOR DETAILS, SEE STANDARD 3.2.11 OF BRIDGE DESIGN MANUAL).
6. BEND RADIUS SHALL BE FOUR TIMES BOLT DIAMETER.
7. CONNECT GROUND WIRES TO POLE BASE GROUND LUG. NOT ANCHOR BOLTS OF TRANSFORMER BASE.

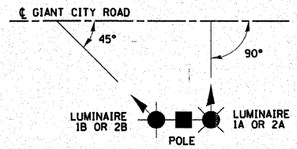


LUMINAIRE AIMING DETAIL

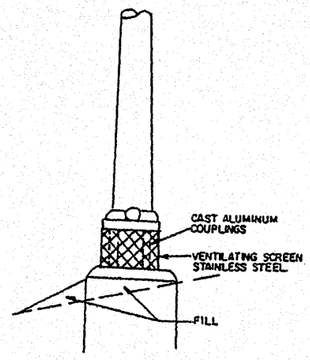


FRANGIBLE METAL BREAKAWAY COUPLING

NO SCALE

SERVICE DETAIL NOTES

1. Provide weatherhead at height required by utility company, AmerenCIPS. Contact utility prior to construction and coordinate all service requirements.
2. Existing utility power pole. See plans for location.
3. Minimum 6 feet of cables for connection by utility company.
4. Provide fasteners to pole at 30 inch spacing or as otherwise required by utility company.
5. 30 amp, 240 volt, 2-pole, 3-wire solid neutral, NEMA 3R fusible disconnect. Fuses at 30 amps with proper fuse reducers.
6. 3-#10 XLP-USE cables in 3/4" galvanized heavy wall conduit. Side entrances into enclosure shall be made with sealing type locknuts. Provide grounding type insulating conduit bushings and proper bonding at meter, where required by the utility company.
7. 100 amp, 120/240 volt single phase meter base for underground service, provided by the Contractor to AmerenCIPS Standards.
8. 3-#10 XLP-USE cables in 3/4" galvanized heavy wall conduit.
9. 1-#6 bare copper grounding electrode conductor in 1/2" PVC conduit to a 5/8" x 8' ground rod driven 1' below grade.
10. 3-#10 XLP-USE cables in 3/4" galvanized heavy wall conduit for underground service conductors from utility transformer. Provide grounding type insulating bushings and proper bonding at meter, where required by the utility company.
11. Treated wood mounting frame shall consist of 2- 6" x 6" x 10' posts and a minimum of 4- 2" x 4" cross-members, all connected with 1/2" plated carriage bolts.
12. Lighting controller / photocell relay assembly.
13. 2-#10 and 1-#10 equipment grounding conductor in 3/4" PVC Schedual 80 conduit in trench or pushed to light poles.

POLE BASE WIRING & LUMINAIRE MOUNTING

NOT TO SCALE

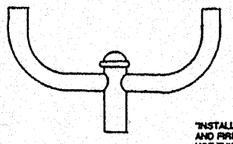

"INSTALL AND ORIENT ARM BRACKET OVER POLE TENON AND FIRMLY HAND TIGHTEN THE TWO SET SCREWS. USE THIRD HOLE IN ARM BRACKET AS A GUIDE TO DRILL A 21/64" DIAMETER HOLE THROUGH TENON. INSTALL AND TIGHTEN SELF-TAPPING SCREW. TIGHTEN SET SCREWS AN ADDITIONAL 1/4 TO 3/8 TURN WITH HEX KEY (NOT PROVIDED). INSTALL LOCKNUTS ON SET SCREWS IF THREADED PROJECTION ALLOWS."

POLE SHALL MEET AASHTO STANDARD SPECIFICATIONS FOR 80 M.P.H. WIND LOADING & 90 LB. 4.0 SQ. FT. E.P.A. LUMINAIRE.

TWIN TENON

NO SCALE

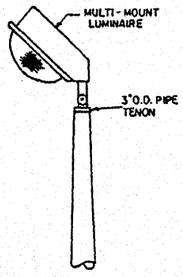


TENON

NO SCALE

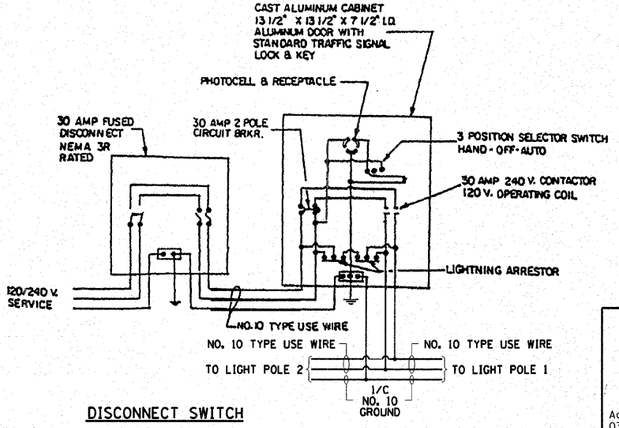


DISCONNECT SWITCH

PHOTO CELL RELAY

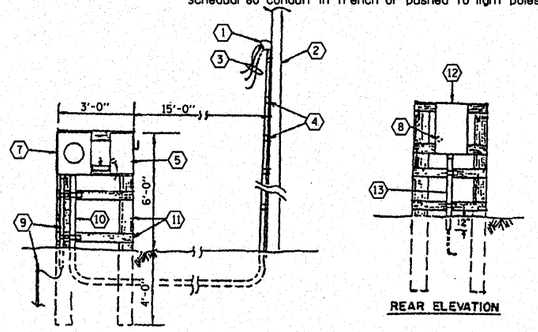


FRONT ELEVATION

REAR ELEVATION

Rice, Berry and Associates
A Division of Hampton, Lenzini and Renwick, Inc.
Civil & Structural Engineers
801 S. Durkin Drive
Springfield, Illinois 62704
217-546-3400

Account Number 03-47-0001-1

Date: 09-26-06

DESIGNED: L.F.S. | CHECKED: S.W.M. | DRAWN: W.J.S.

# LIGHTING DETAIL

SECTION 99-02118-00-FP

F.A.U. 9713 / EAST PLEASANT HILL ROAD

JACKSON COUNTY

| ROUTE | SECTION | COUNTY | TOTAL SHEETS | SHEET NO. |
|---|---|---|---|---|
| FAU 9713 | 99-02118-00-FP | JACKSON | 122 | 40 |
| FED. ROAD DIST. NO. | | ILLINOIS | FED. AID PROJECT- | |

CONTRACT NO. 99219

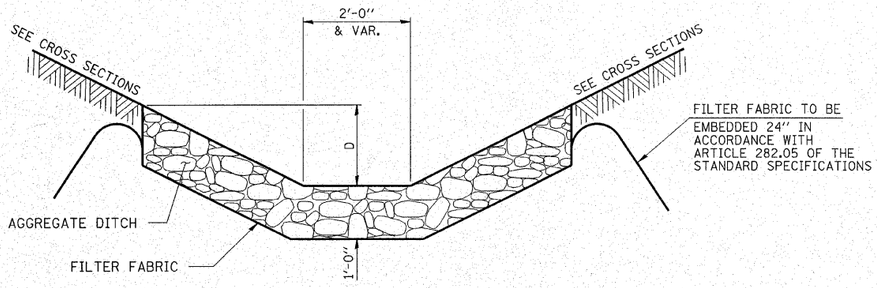


## AGGREGATE DITCH LINING DETAIL

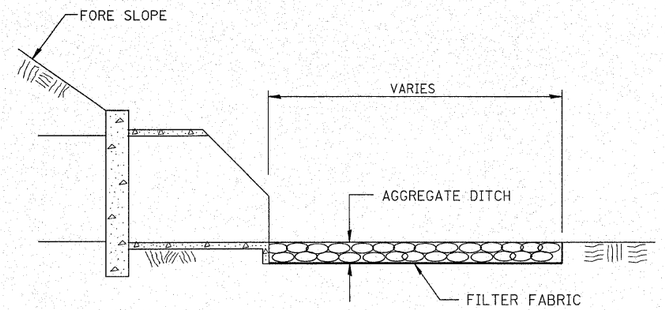


## PIPE CULVERT END SECTION

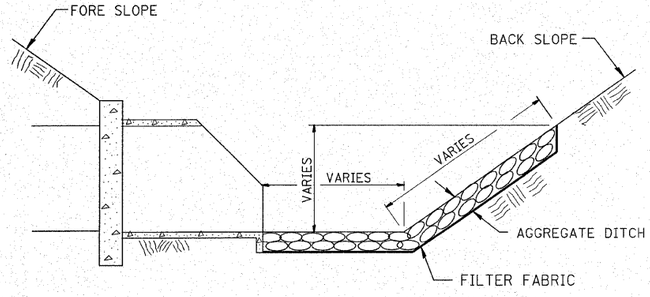


## PIPE CULVERT END SECTION

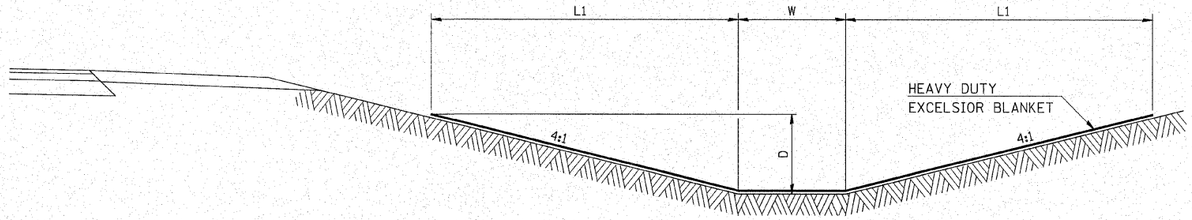


## HEAVY DUTY EXCELSIOR BLANKET DITCH LINING DETAIL

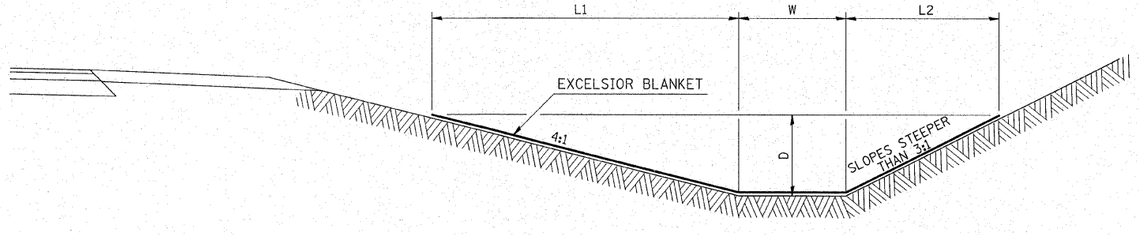


## EXCELSIOR BLANKET DETAIL


HLR
Rice, Berry and Associates
A Division of Hampton, Lenzini and Renwick, Inc.
Civil & Structural Engineers
801 S. Durkin Drive
Springfield, Illinois 62704
217-546-3400


Account Number
03-47-0001-1

Date: 09-25-06

DESIGNED: L.F.S. | CHECKED: L.F.S. | DRAWN: W.J.S.

# DITCH LINING DETAILS

**SECTION 99-02118-00-FP**

**F.A.U. 9713 / EAST PLEASANT HILL ROAD**

**JACKSON COUNTY**

| ROUTE | SECTION | COUNTY | TOTAL SHEETS | SHEET NO. |
|---|---|---|---|---|
| FAU 9713 | 99-02118-00-FP | JACKSON | 122 | 41 |
| FED. ROAD DIST. NO. | | ILLINOIS | FED. AID PROJECT- | |

CONTRACT NO. 99219

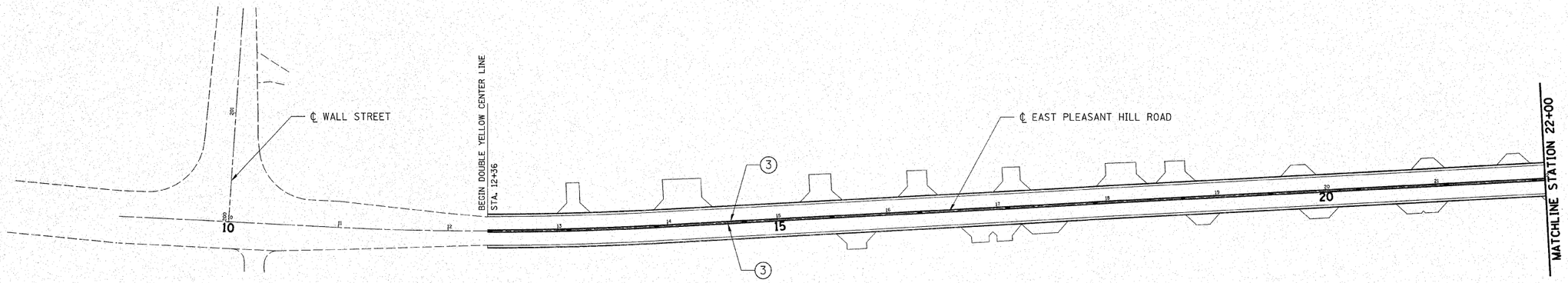

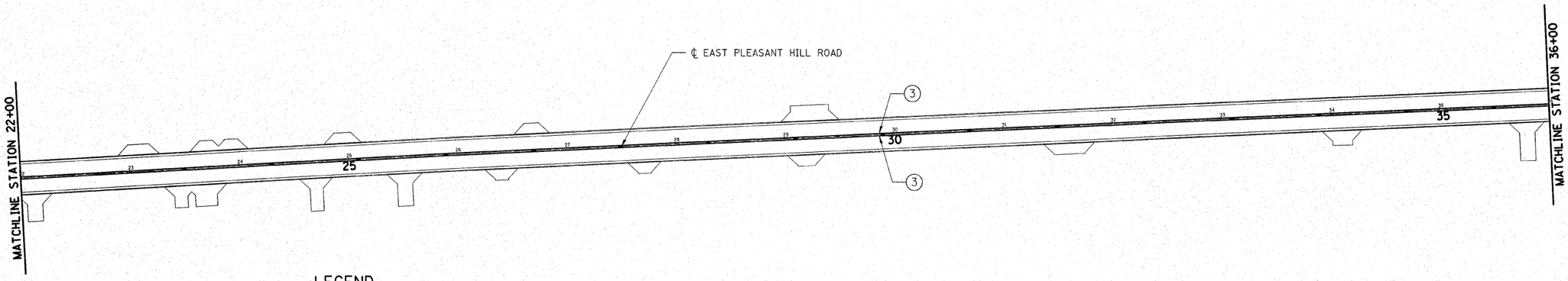


## LEGEND

(1) THERMOPLASTIC PAVEMENT MARKING - LINE 24"
(WHITE STOP LINE)

(2) PAINT PAVEMENT MARKING - LINE 4"
(WHITE EDGE LINE)

(3) PAINT PAVEMENT MARKING - LINE 4"
YELLOW

STOP R1-1 (30"X30")

◆ RAISED REFECTIVE PAVEMENT MARKERS
AMBER TWO-WAY


Rice, Berry and Associates
A Division of Hampton, Lenzini and Renwick, Inc.
Civil & Structural Engineers
801 S. Durkin Drive
Springfield, Illinois 62704
217-546-3400


Account Number
03-47-0001-1

Date: 10-04-06

DESIGNED: L.F.S. | CHECKED: S.W.M. | DRAWN: W.J.S.

# PAVEMENT MARKING PLAN

**SECTION 99-02118-00-FP**

**F.A.U. 9713 / EAST PLEASANT HILL ROAD**

**JACKSON COUNTY**

| ROUTE | SECTION | COUNTY | TOTAL SHEETS | SHEET NO. |
|---|---|---|---|---|
| FAU 9713 | 99-02118-00-FP | JACKSON | 122 | 42 |
| FED. ROAD DIST. NO. | | ILLINOIS | FED. AID PROJECT- | |

CONTRACT NO. 99219

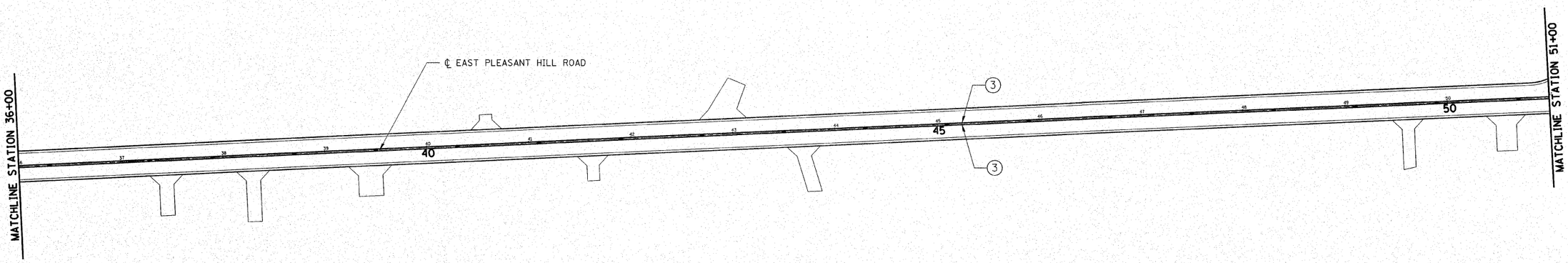


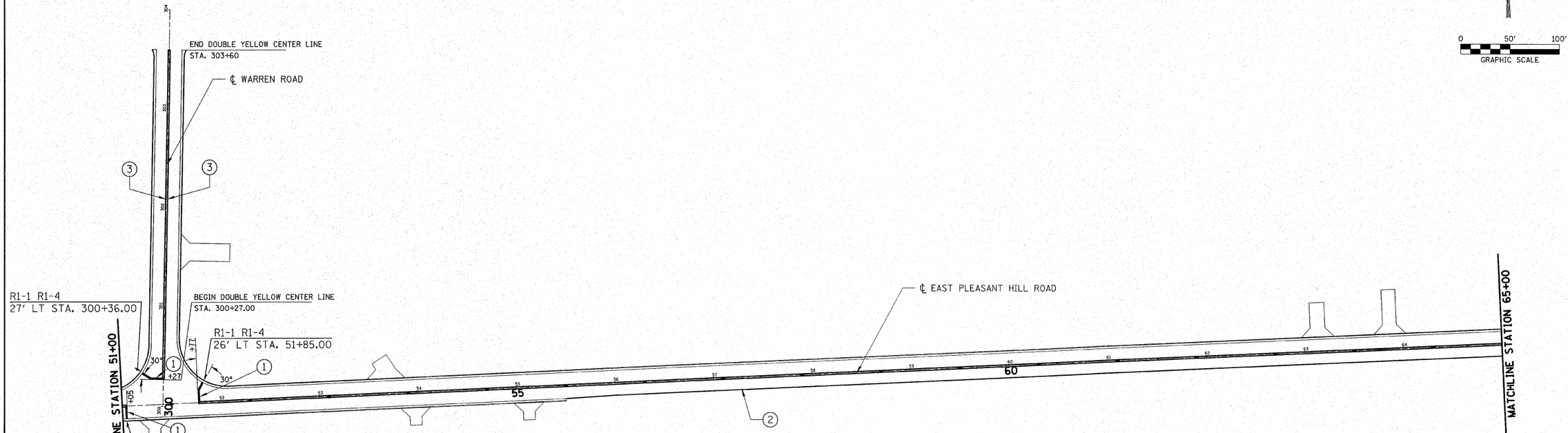

0 50' 100'
GRAPHIC SCALE

## LEGEND

(1) THERMOPLASTIC PAVEMENT MARKING - LINE 24"
(WHITE STOP LINE)

(2) PAINT PAVEMENT MARKING - LINE 4"
(WHITE EDGE LINE)

(3) PAINT PAVEMENT MARKING - LINE 4"
YELLOW

STOP R1-1 (30"X30")

◆ RAISED REFECTIVE PAVEMENT MARKERS
AMBER TWO-WAY


HLR

Rice, Berry and Associates
A Division of Hampton, Lenzini and Renwick, Inc.
Civil & Structural Engineers
801 S. Durkin Drive
Springfield, Illinois 62704
217-546-3400


Account Number
03-47-0001-1

Date: 10-04-06

DESIGNED: L.F.S. | CHECKED: S.W.M. | DRAWN: W.J.S.

# PAVEMENT MARKING PLAN

**SECTION 99-02118-00-FP**

**F.A.U. 9713 / EAST PLEASANT HILL ROAD**

**JACKSON COUNTY**

| ROUTE | SECTION | COUNTY | TOTAL SHEETS | SHEET NO. |
|---|---|---|---|---|
| FAU 9713 | 99-02118-00-FP | JACKSON | 122 | 43 |
| FED. ROAD DIST. NO. | | ILLINOIS | FED. AID PROJECT- | |

CONTRACT NO. 99219

N

0 50' 100'

GRAPHIC SCALE

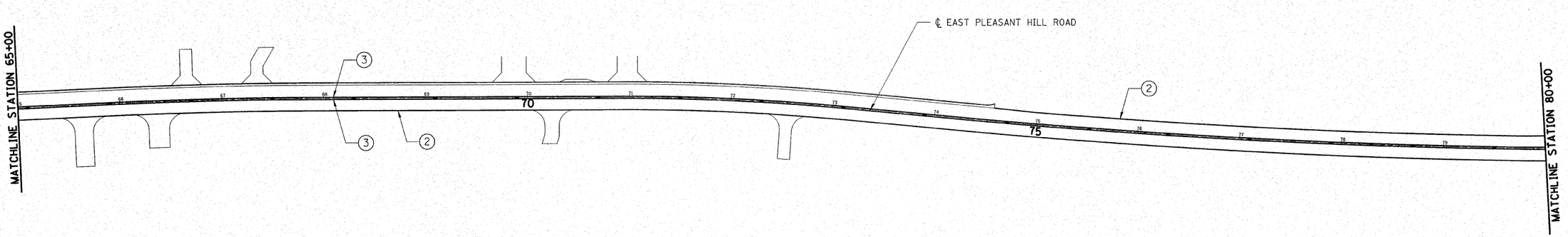


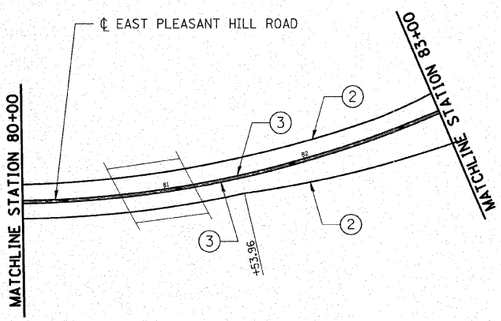


## LEGEND

1. THERMOPLASTIC PAVEMENT MARKING - LINE 24"
   (WHITE STOP LINE)
2. PAINT PAVEMENT MARKING - LINE 4"
   (WHITE EDGE LINE)
3. PAINT PAVEMENT MARKING - LINE 4"
   YELLOW

STOP R1-1 (30"X30")

◆ RAISED REFECTIVE PAVEMENT MARKERS
AMBER TWO-WAY


HLR

Rice, Berry and Associates
A Division of Hampton, Lenzini and Renwick, Inc.
Civil & Structural Engineers
801 S. Durkin Drive
Springfield, Illinois 62704
217-546-3400


Account Number
03-47-0001-1

Date: 10-04-06

DESIGNED: L.F.S. | CHECKED: S.W.M. | DRAWN: W.J.S.

# PAVEMENT MARKING PLAN

**SECTION 99-02118-00-FP**

**F.A.U. 9713 / EAST PLEASANT HILL ROAD**

**JACKSON COUNTY**

| ROUTE | SECTION | COUNTY | TOTAL SHEETS | SHEET NO. |
|---|---|---|---|---|
| FAU 9713 | 99-02118-00-FP | JACKSON | 122 | 44 |
| FED. ROAD DIST. NO. | | ILLINOIS | FED. AID PROJECT- | |

**CONTRACT NO. 99219**

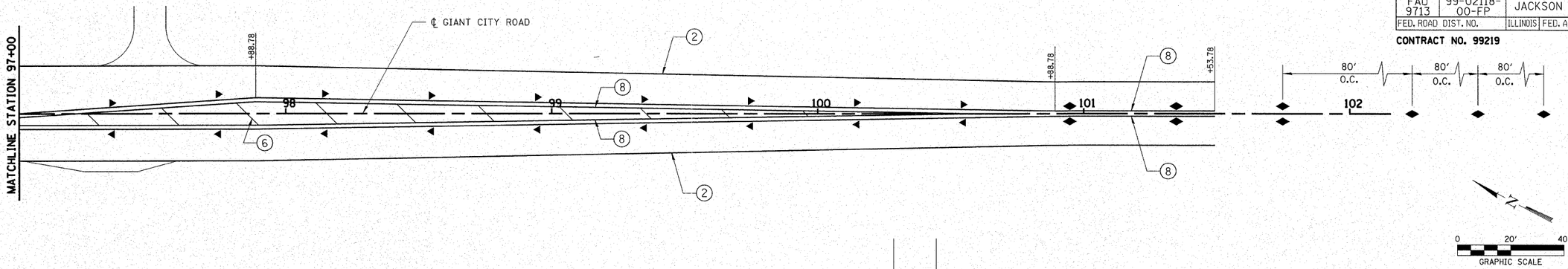


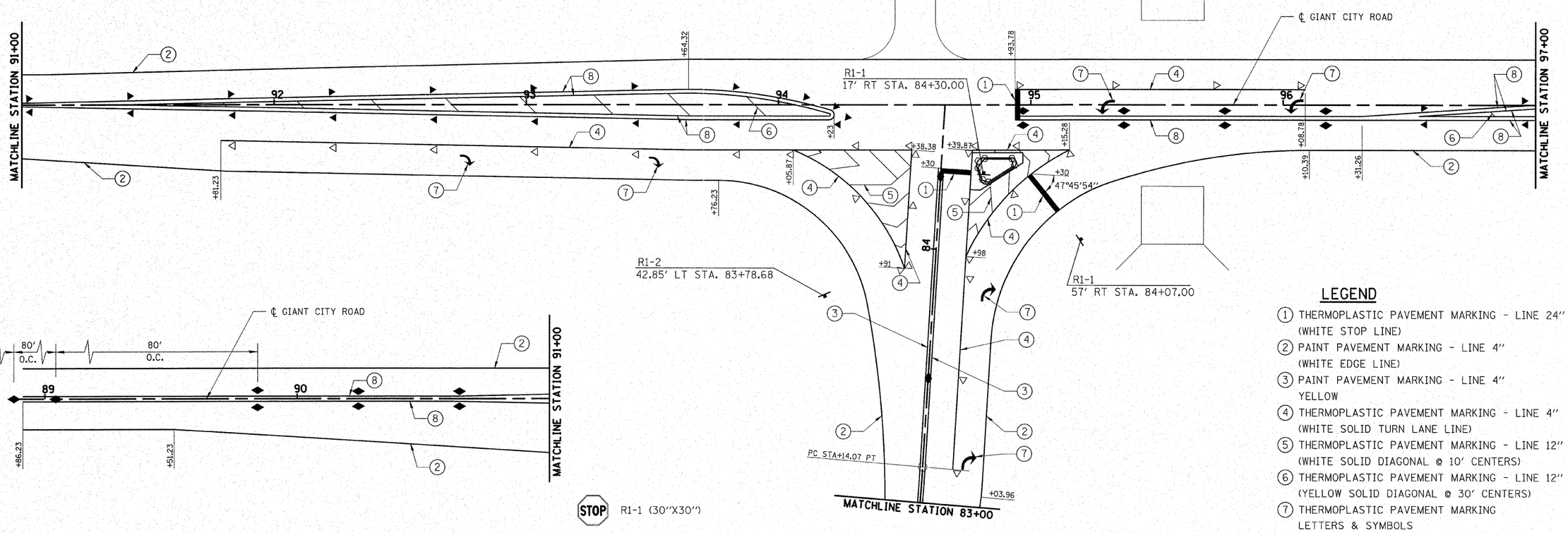





## LEGEND

1. THERMOPLASTIC PAVEMENT MARKING - LINE 24″ (WHITE STOP LINE)
2. PAINT PAVEMENT MARKING - LINE 4″ (WHITE EDGE LINE)
3. PAINT PAVEMENT MARKING - LINE 4″ YELLOW
4. THERMOPLASTIC PAVEMENT MARKING - LINE 4″ (WHITE SOLID TURN LANE LINE)
5. THERMOPLASTIC PAVEMENT MARKING - LINE 12″ (WHITE SOLID DIAGONAL @ 10′ CENTERS)
6. THERMOPLASTIC PAVEMENT MARKING - LINE 12″ (YELLOW SOLID DIAGONAL @ 30′ CENTERS)
7. THERMOPLASTIC PAVEMENT MARKING LETTERS & SYMBOLS
8. THERMOPLASTIC PAVEMENT MARKING - LINE 4″ YELLOW

STOP R1-1 (30″X30″)

R1-2 (36″)

◆ RAISED REFLECTIVE PAVEMENT MARKERS AMBER TWO-WAY

▶ RAISED REFLECTIVE PAVEMENT MARKERS AMBER ONE-WAY

▷ RAISED REFLECTIVE PAVEMENT MARKERS CRYSTAL ONE-WAY

○ PRISMATIC CURB REFLECTORS


Rice, Berry and Associates
A Division of Hampton, Lenzini and Renwick, Inc.
Civil & Structural Engineers
801 S. Durkin Drive
Springfield, Illinois 62704
217-546-3400


Account Number 03-47-0001-1

Date: 10-04-06

DESIGNED: L.F.S. | CHECKED: S.W.M. | DRAWN: W.J.S.

# PAVEMENT MARKING PLAN

**SECTION 99-02118-00-FP**

**F.A.U. 9713 / EAST PLEASANT HILL ROAD**

**JACKSON COUNTY**

| ROUTE | SECTION | COUNTY | TOTAL SHEETS | SHEET NO. |
|---|---|---|---|---|
| FAU 9713 | 99-02118-00-FP | JACKSON | 122 | 45 |
| FED. ROAD DIST. NO. | | ILLINOIS | FED. AID PROJECT- | |

CONTRACT NO. 99219

# GENERAL NOTES FOR SOIL EROSION CONTROL

1. SOIL EROSION AND SEDIMENT CONTROL FEATURES SHALL BE CONSTRUCTED PRIOR TO THE COMMENCEMENT OF UPLAND DISTURBANCE. SOIL DISTURBANCE SHALL BE CONDUCTED IN SUCH A MANNER TO MINIMIZE EROSION. SOIL STABILIZATION MEASURES SHALL CONSIDER THE TIME OF YEAR, SITE CONDITIONS AND THE USE OF TEMPORARY OR PERMANENT MEASURES.
2. PERIMETER EROSION BARRIER SHALL BE INSTALLED AT LOCATIONS SPECIFIED IN THE PLANS AT 4 FEET OUTSIDE THE TOE OF SLOPE OR INSIDE THE RIGHT-OF-WAY WHICHEVER IS CLOSER TO THE CENTERLINE, OR AS DIRECTED BY THE ENGINEER PRIOR TO THE START OF ANY EARTHWORK, CULVERT, OR STORM SEWER CONSTRUCTION. STAKES SHALL BE PLACED AT A MINIMUM OF 4 FOOT INTERVALS. SEE CODE 920 OF THE ILLINOIS URBAN MANUAL AND CONTRACT SPECIAL PROVISIONS.
3. THE PERIMETER EROSION BARRIER SHALL BE REMOVED WITHIN 30 DAYS AFTER ALL DISTURBED AREAS HAVE BEEN STABILIZED WITH VEGETATION. AFTER THE PERIMETER EROSION BARRIER IS REMOVED, ALL AREAS DAMAGED BY THE FENCE INSTALLATION RESTORED.
4. THE FENCE INSTALLATION, MAINTENANCE, REMOVAL AND THE RESTORATION OF THE AREA DISTURBED BY THE FENCE INSTALLATION IS INCLUDED IN COST OF THE PAY ITEM PERIMETER EROSION BARRIER.
5. TEMPORARY DITCH CHECKS SHALL BE CONSTRUCTED AS PER CONTRACT SPECIAL PROVISIONS AND AS SHOWN HEREON OR AS DIRECTED BY THE ENGINEER. THE DITCH CHECK SPACING IS BASED ON 1.5' HIGH DITCH CHECKS WITH A MAXIMUM SPACING DISTANCE OF 150' AT OR BELOW A 1% DITCH SLOPE. THE DITCH CHECKS SHALL BE INSTALLED IMMEDIATELY AS GRADING PROGRESSES THROUGH THE PROJECT. THE PAY ITEM FOR TEMPORARY DITCH CHECK SHALL INCLUDE THE COST OF INSTALLATION, MAINTENANCE AND REMOVAL.
6. REMOVAL OF TRAPPED SEDIMENT SHALL BE CONSIDERED AS INCIDENTAL TO EARTH EXCAVATION. SEDIMENT SHALL BE REMOVED WHEN SILTATION REACHES 50% CAPACITY OF STRUCTURE. SEE APPLICABLE STANDARDS, SPECIFICATIONS, AND CONTRACT SPECIAL PROVISIONS FOR: EROSION AND SEDIMENT CONTROL. ILLINOIS URBAN MANUAL.
7. THE CONTRACTOR SHALL CLEAN UP AND GRADE THE WORK AREA AS THE PROJECT PROGRESSES TO ELIMINATE THE CONCENTRATION OF RUNOFF. THE PAVEMENT SHALL BE CLEANED DAILY TO REMOVE EARTH MATERIAL TO THE SATISFACTION OF THE ENGINEER.
8. ALL DISTURBED AREAS SHALL BE SEEDED AS DIRECTED BY THE ENGINEER. FINAL SEEDING SHALL CONFORM TO SEEDING CLASS 2 AS PER IDOT STANDARD SPECIFICATIONS AND CONTRACT SPECIAL PROVISIONS.
9. THE CONTRACTOR SHALL MAINTAIN AND PRESERVE ANY EXISTING SUB SURFACE DRAINAGE SYSTEMS (i.e. FIELD TILES) ACCORDING TO SECTION 611 OF THE IDOT STANDARD SPECIFICATIONS.

## TEMPORARY DITCH CHECK

| LOCATION | EACH |
|---|---|
| EAST PLEASANT HILL ROAD | |
| RT. STA. 14+60 | 1 |
| RT. STA. 15+20 | 1 |
| RT. STA. 16+40 | 1 |
| RT. STA. 59+00 | 1 |
| RT. STA. 59+30 | 1 |
| RT. STA. 59+60 | 1 |
| RT. STA. 59+90 | 1 |
| RT. STA. 60+20 | 1 |
| RT. STA. 60+50 | 1 |
| RT. STA. 60+80 | 1 |
| RT. STA. 61+10 | 1 |
| RT. STA. 61+40 | 1 |
| RT. STA. 63+50 | 1 |
| RT. STA. 64+50 | 1 |
| RT. STA. 67+00 | 1 |
| RT. STA. 67+60 | 1 |
| RT. STA. 68+00 | 1 |
| RT. STA. 69+00 | 1 |
| RT. STA. 69+20 | 1 |
| RT. STA. 69+40 | 1 |
| RT. STA. 69+60 | 1 |
| RT. STA. 70+40 | 1 |
| RT. STA. 70+60 | 1 |
| RT. STA. 70+80 | 1 |
| RT. STA. 71+50 | 1 |
| RT. STA. 72+00 | 1 |
| RT. STA. 73+00 | 1 |
| RT. STA. 73+50 | 1 |
| RT. STA. 74+00 | 1 |
| LT. STA. 74+00 | 1 |
| LT. STA. 75+50 | 1 |
| RT. STA. 75+50 | 1 |
| LT. STA. 77+00 | 1 |
| RT. STA. 77+00 | 1 |
| LT. STA. 78+50 | 1 |
| RT. STA. 78+50 | 1 |
| LT. STA. 80+00 | 1 |
| RT. STA. 80+00 | 1 |
| | |
| WARREN ROAD | 0 |
| | |
| GIANT CITY ROAD | 0 |
| | |
| TOTAL | 38 |

## PERIMETER EROSION BARRIER

| LOCATION | FOOT |
|---|---|
| EAST PLEASANT HILL ROAD | |
| LT. STA. 14+40 TO STA. 15+20 | 80 |
| LT. STA. 15+55 TO STA. 16+14 | 59 |
| LT. STA. 16+45 TO STA. 17+00 | 55 |
| LT. STA. 18+30 TO STA. 18+50 | 20 |
| LT. STA. 18+80 TO STA. 19+63 | 83 |
| LT. STA. 19+90 TO STA. 20+40 | 50 |
| LT. STA. 21+05 TO STA. 21+60 | 55 |
| LT. STA. 21+85 TO STA. 22+95 | 110 |
| LT. STA. 23+24 TO STA. 23+60 | 36 |
| LT. STA. 24+06 TO STA. 24+80 | 74 |
| RT. STA. 24+80 TO STA. 25+38 | 58 |
| LT. STA. 25+10 TO STA. 26+55 | 145 |
| LT. STA. 26+70 TO STA. 29+00 | 230 |
| RT. STA. 27+80 TO STA. 29+05 | 125 |
| RT. STA. 29+30 TO STA. 30+50 | 120 |
| LT. STA. 31+00 TO STA. 40+53 | 953 |
| RT. STA. 31+80 TO STA. 34+00 | 220 |
| LT. STA. 40+65 TO STA. 42+94 | 229 |
| RT. STA. 41+00 TO STA. 41+50 | 50 |
| RT. STA. 44+00 TO STA. 47+50 | 350 |
| LT. STA. 45+50 TO STA. 51+00 | 550 |
| RT. STA. 54+08 TO STA. 55+00 | 92 |
| RT. STA. 56+00 TO STA. 58+00 | 200 |
| RT. STA. 62+00 TO STA. 63+50 | 150 |
| RT. STA. 64+40 TO STA. 65+50 | 110 |
| LT. STA. 78+75 TO STA. 80+57 | 182 |
| RT. STA. 81+00 TO STA. 84+00 | 300 |
| LT. STA. 82+30 TO STA. 83+00 | 70 |
| | |
| WARREN ROAD | |
| LT. STA. 300+36 TO STA. 303+60 | 324 |
| RT. STA. 300+50 TO STA. 301+50 | 100 |
| | |
| GIANT CITY ROAD | |
| LT. STA. 88+90 TO STA. 94+40 | 550 |
| RT. STA. 88+90 TO STA. 93+79 | 489 |
| LT. STA. 94+70 TO STA. 95+40 | 70 |
| RT. STA. 95+75 TO STA. 101+30 | 555 |
| LT. STA. 95+85 TO STA. 97+38 | 153 |
| LT. STA. 97+60 TO STA. 101+50 | 390 |
| | |
| **TOTAL** | 7,387 |

## EROSION CONTROL BLANKET

| LOCATION | SQ YD |
|---|---|
| EAST PLEASANT HILL ROAD | |
| RT. STA. 12+50 TO RT. STA. 13+50 | 89 |
| LT. STA. 27+00 TO LT. STA. 29+00 | 133 |
| LT. STA. 32+00 TO LT. STA. 34+50 | 231 |
| LT. STA. 37+50 TO LT. STA. 39+44 | 304 |
| RT. STA. 38+35 TO RT. STA. 39+16 | 81 |
| LT. STA. 41+62 TO LT. STA. 42+90 | 168 |
| RT. STA. 45+00 TO RT. STA. 49+45 | 472 |
| LT. STA. 46+50 TO LT. STA. 48+00 | 100 |
| LT. STA. 48+00 TO LT. STA. 50+50 | 525 |
| LT. STA. 52+00 TO LT. STA. 53+50 | 164 |
| RT. STA. 58+50 TO RT. STA. 62+00 | 350 |
| RT. STA. 66+60 TO RT. STA. 70+10 | 350 |
| LT. STA. 67+45 TO LT. STA. 69+00 | 96 |
| RT. STA. 70+40 TO RT. STA. 72+40 | 178 |
| RT. STA. 72+65 TO RT. STA. 81+10 | 1018 |
| LT. STA. 73+00 TO LT. STA. 78+95 | 463 |
| SUBTOTAL | 4722 |
| | |
| WARREN ROAD | |
| LT. STA. 300+37 TO LT. STA. 303+60 | 225 |
| RT. STA. 300+37 TO RT. STA. 301+45 | 307 |
| RT. STA. 300+65 TO RT. STA. 303+50 | 171 |
| SUBTOTAL | 703 |
| | |
| PROJECT TOTAL | 5425 |

## HEAVY DUTY EROSION CONTROL BLANKET

| LOCATION | SQ YD |
|---|---|
| EAST PLEASANT HILL ROAD | |
| | |
| LT. STA 78+95 TO LT STA. 80+44 | 678 |
| RT. STA 81+50 TO RT STA. 84+00 | 1,138 |
| | |
| TOTAL | 1,816 |

## INLET FILTERS

| LOCATION | EACH |
|---|---|
| EAST PLEASANT HILL ROAD | |
| LT STA. 12+53.40 | 1 |
| RT STA. 12+53.40 | 1 |
| LT STA. 15+00.00 | 1 |
| RT STA. 15+00.00 | 1 |
| LT STA. 16+25.00 | 1 |
| RT STA. 16+25.00 | 1 |
| LT STA. 16+58.33 | 2 |
| RT STA. 16+58.33 | 2 |
| LT STA. 16+91.66 | 1 |
| RT STA. 16+91.66 | 1 |
| LT STA. 17+63.00 | 1 |
| LT STA. 20+20.00 | 1 |
| LT STA. 20+33.00 | 1 |
| RT STA. 20+33.00 | 1 |
| LT STA. 27+33.00 | 1 |
| RT STA. 27+33.00 | 1 |
| LT STA. 27+49.00 | 1 |
| RT STA. 27+49.00 | 1 |
| LT STA. 27+75.00 | 1 |
| RT STA. 27+75.00 | 1 |
| LT STA. 32+83.34 | 2 |
| RT STA. 32+83.34 | 1 |
| LT STA. 33+10.34 | 1 |
| RT STA. 33+10.34 | 1 |
| LT STA. 33+37.34 | 1 |
| RT STA. 33+37.34 | 1 |
| LT STA. 38+63.43 | 1 |
| RT STA. 38+63.43 | 2 |
| LT STA. 38+83.43 | 1 |
| RT STA. 38+83.43 | 1 |
| LT STA. 39+03.43 | 1 |
| RT STA. 39+03.43 | 1 |
| LT STA. 42+20.00 | 1 |
| RT STA. 42+20.00 | 2 |
| LT STA. 46+50.00 | 1 |
| RT STA. 46+50.00 | 1 |
| LT STA. 48+63.81 | 1 |
| RT STA. 48+63.81 | 1 |
| LT STA. 48+83.81 | 1 |
| RT STA. 48+83.81 | 1 |
| LT STA. 49+03.81 | 1 |
| RT STA. 49+03.81 | 1 |
| RT STA. 49+33.39 | 1 |
| RT STA. 50+83.00 | 1 |
| RT STA. 51+50.00 | 1 |
| LT STA. 54+23.24 | 1 |
| RT STA. 54+23.24 | 1 |
| LT STA. 54+43.57 | 1 |
| RT STA. 54+43.57 | 1 |
| LT STA. 54+63.90 | 1 |
| RT STA. 54+63.90 | 1 |
| LT STA. 59+00.00 | 1 |
| LT STA. 61+62.00 | 1 |
| LT STA. 61+81.00 | 1 |
| LT STA. 62+00.00 | 1 |
| LT STA. 64+50.00 | 1 |
| LT STA. 69+40.00 | 1 |
| LT STA. 70+20.00 | 1 |
| SUBTOTAL | 63 |
| | |
| WARREN ROAD | |
| LT. STA. 300+26.90 | 1 |
| RT. STA. 300+26.90 | 1 |
| SUBTOTAL | 2 |
| | |
| TOTAL | 65 |

## AGGREGATE DITCH

| LOCATION STA TO STA | WIDTH FOOT | LENGTH FOOT | AGG DITCH TONS | FABRIC SQ YD | DEPTH (D) FOOT |
|---|---|---|---|---|---|
| EAST PLEASANT HILL | | | | | |
| LT STA. 33+00 | 13.48 | 5 | 4 | 10 | 1.50 |
| LT STA. 38+48 | 13.48 | 3 | 3 | 6 | 1.50 |
| LT STA. 42+20 | 14.48 | 5 | 5 | 10 | 1.50 |
| LT STA. 46+85 | 12.48 | 5 | 4 | 9 | 1.50 |
| LT STA. 49+47 | 15.48 | 8 | 8 | 17 | 1.50 |
| LT STA 54+45 | 12.48 | 5 | 4 | 9 | 1.50 |
| RT STA. 83+80 | 10 | 35 | 23 | 54 | 1.50 |
| | | | | | |
| TOTAL PROJECT | | | 51 | 115 | |

## INLET & PIPE PROTECTION

| LOCATION | EACH | | EACH |
|---|---|---|---|
| EAST PLEASANT HILL ROAD | | | |
| LT STA 11+60.64 | 1 | LT STA 46+50.00 | 1 |
| RT STA 11+61.13 | 1 | RT STA 46+50.00 | 1 |
| LT STA 12+53.40 | 1 | LT STA 48+63.81 | 1 |
| RT STA 12+53.40 | 1 | RT STA 48+63.81 | 1 |
| LT STA 15+00.00 | 1 | LT STA 48+83.81 | 1 |
| RT STA 15+00.00 | 1 | RT STA 48+83.81 | 1 |
| LT STA 16+25.00 | 1 | LT STA 49+03.81 | 1 |
| RT STA 16+25.00 | 1 | RT STA 49+03.81 | 1 |
| LT STA 16+58.33 | 2 | RT STA 49+30.00 | 1 |
| RT STA 16+58.33 | 2 | RT STA 49+33.39 | 1 |
| LT STA 16+91.66 | 1 | RT STA 50+83.00 | 1 |
| RT STA 16+91.66 | 1 | RT STA 51+50.00 | 1 |
| LT STA 17+63.00 | 1 | LT STA 54+23.24 | 1 |
| LT STA 20+20.00 | 1 | RT STA 54+23.24 | 1 |
| LT STA 20+33.00 | 1 | LT STA 54+43.57 | 1 |
| RT STA 20+33.00 | 1 | RT STA 54+43.57 | 2 |
| LT STA 27+23.40 | 1 | LT STA 54+63.90 | 1 |
| RT STA 27+23.40 | 1 | RT STA 54+63.90 | 1 |
| LT STA 27+49.00 | 1 | LT STA 59+00.00 | 1 |
| RT STA 27+49.00 | 1 | LT STA 61+62.00 | 1 |
| LT STA 27+75.00 | 1 | LT STA 61+67.00 | 1 |
| RT STA 27+75.00 | 2 | LT STA 61+81.00 | 1 |
| LT STA 32+83.34 | 1 | LT STA 62+00.00 | 1 |
| RT STA 32+83.34 | 1 | LT STA 64+50.00 | 1 |
| LT STA 33+10.34 | 1 | RT STA 66+20.00 | 1 |
| RT STA 33+10.34 | 1 | LT STA 69+40.00 | 1 |
| LT STA 33+37.34 | 1 | RT STA 70+10.00 | 1 |
| RT STA 33+37.34 | 1 | LT STA 70+32.72 | 1 |
| RT STA 38+09.69 | 1 | RT STA 72+40.00 | 1 |
| LT STA 38+63.43 | 1 | LT STA 82+70.00 | 1 |
| RT STA 38+63.43 | 2 | SUBTOTAL | 73 |
| LT STA 38+83.43 | 1 | WARREN ROAD | |
| RT STA 38+83.43 | 1 | LT STA 300+26.90 | 1 |
| LT STA 39+03.43 | 1 | RT STA 300+33.57 | 1 |
| RT STA 39+03.43 | 1 | SUBTOTAL | 2 |
| LT STA 42+20.00 | 1 | | |
| RT STA 42+20.00 | 2 | TOTAL | 75 |


Rice, Berry and Associates
A Division of Hampton, Lenzini and Renwick, Inc.
Civil & Structural Engineers
801 S. Durkin Drive
Springfield, Illinois 62704
217-546-3400


Account Number 03-47-0001-1

Date: 01-31-07

DESIGNED: L.F.S. | CHECKED: S.W.M. | DRAWN: W.J.S.

# EROSION CONTROL PLAN

**SECTION 99-02118-00-FP**

**F.A.U. 9713 / EAST PLEASANT HILL ROAD**

**JACKSON COUNTY**

| ROUTE | SECTION | COUNTY | TOTAL SHEETS | SHEET NO. |
|---|---|---|---|---|
| FAU 9713 | 99-02118-00-FP | JACKSON | 122 | 46 |
| FED. ROAD DIST. NO. | | ILLINOIS | FED. AID PROJECT- | |

CONTRACT NO. 99219

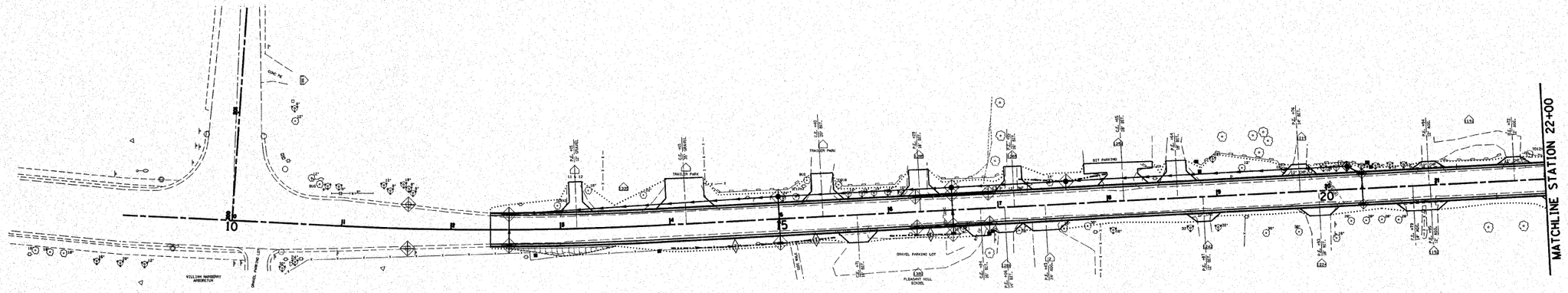


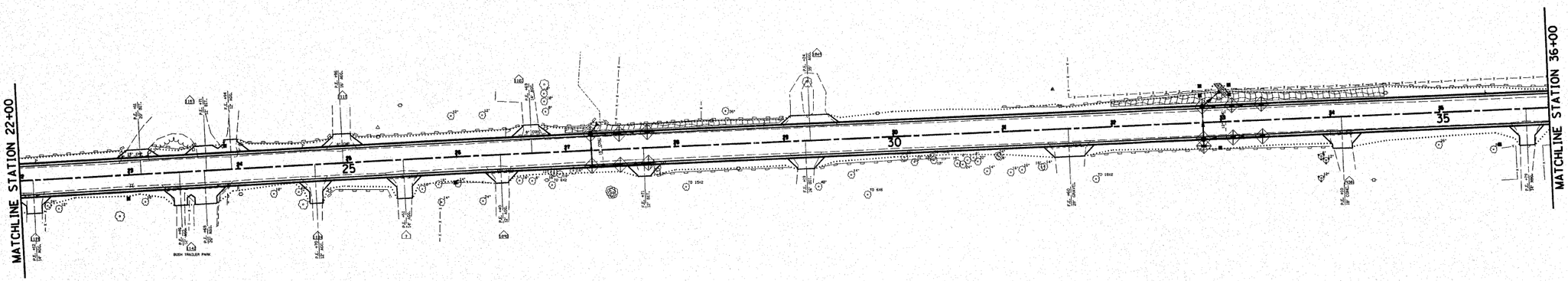


N

0 50' 100'
GRAPHIC SCALE

## LEGEND

- EROSION CONTROL BLANKET
- HEAVY DUTY EXCELSIOR BLANKET
- AGGREGATE DITCH
- PERIMETER EROSION BARRIER
- TEMPORARY DITCH CHECK
- INLET AND PIPE PROTECTION


HLR

Rice, Berry and Associates
A Division of Hampton, Lenzini and Renwick, Inc.
Civil & Structural Engineers
801 S. Durkin Drive
Springfield, Illinois 62704
217-546-3400


Account Number
03-47-0001-1

Date: 03-19-07

DESIGNED: L.F.S. | CHECKED: S.W.M. | DRAWN: W.J.S.

# EROSION CONTROL PLAN

## SECTION 99-02118-00-FP

## F.A.U. 9713 / EAST PLEASANT HILL ROAD

## JACKSON COUNTY

| ROUTE | SECTION | COUNTY | TOTAL SHEETS | SHEET NO. |
|---|---|---|---|---|
| FAU 9713 | 99-02118-00-FP | JACKSON | 122 | 47 |
| FED. ROAD DIST. NO. | | ILLINOIS | FED. AID PROJECT- | |

CONTRACT NO. 99219

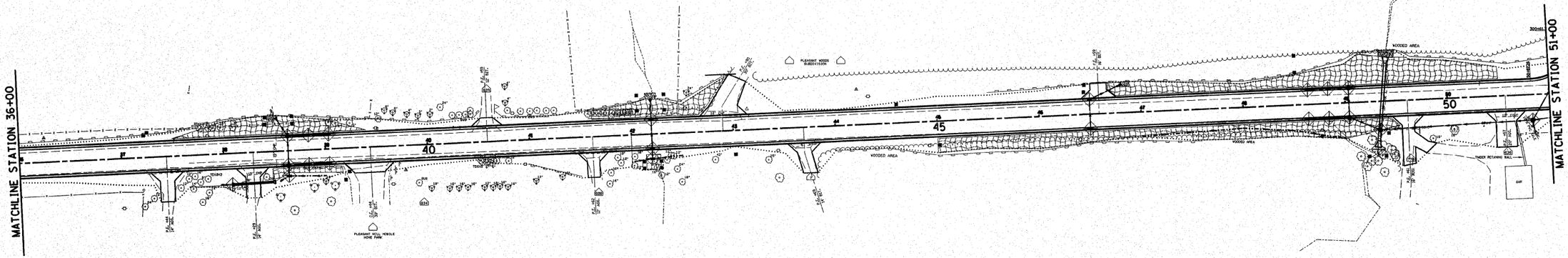


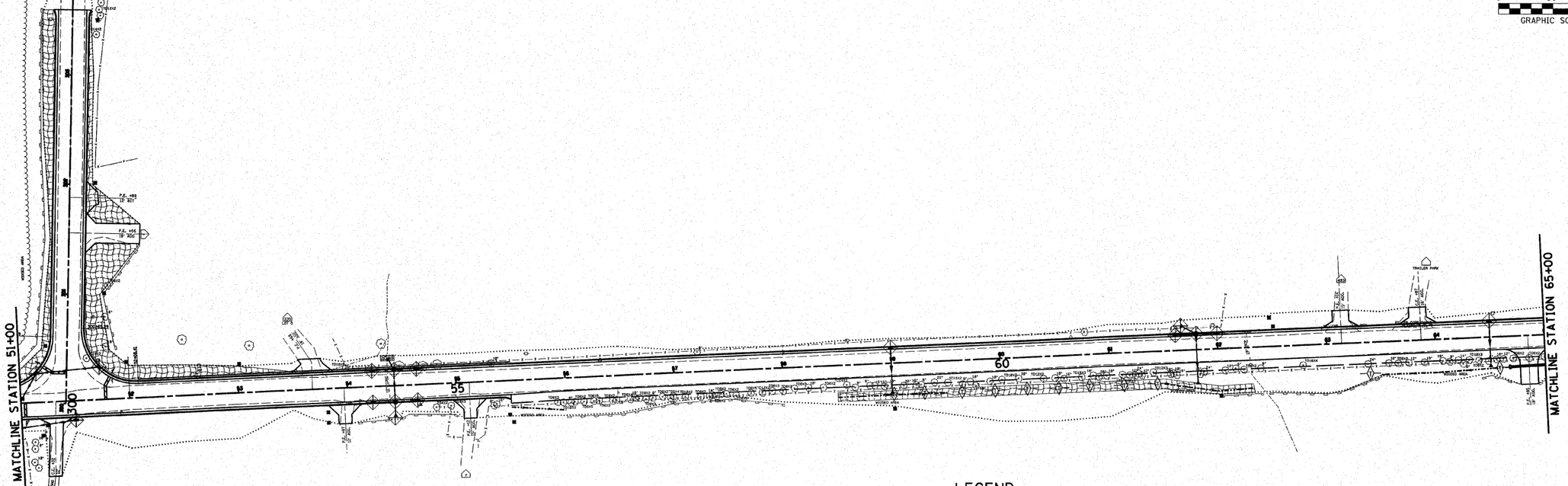


N

0 50′ 100′
GRAPHIC SCALE

## LEGEND

- EROSION CONTROL BLANKET
- HEAVY DUTY EXCELSIOR BLANKET
- AGGREGATE DITCH
- PERIMETER EROSION BARRIER
- TEMPORARY DITCH CHECK
- INLET AND PIPE PROTECTION


Rice, Berry and Associates
A Division of Hampton, Lenzini and Renwick, Inc.
Civil & Structural Engineers
801 S. Durkin Drive
Springfield, Illinois 62704
217-546-3400


Account Number
03-47-0001-1

Date: 03-19-07

DESIGNED: L.F.S. | CHECKED: S.W.M. | DRAWN: W.J.S.

# EROSION CONTROL PLAN

**SECTION 99-02118-00-FP**

**F.A.U. 9713 / EAST PLEASANT HILL ROAD**

**JACKSON COUNTY**

| ROUTE | SECTION | COUNTY | TOTAL SHEETS | SHEET NO. |
|---|---|---|---|---|
| FAU 9713 | 99-02118-00-FP | JACKSON | 122 | 48 |
| FED. ROAD DIST. NO. | | ILLINOIS | FED. AID PROJECT- | |

CONTRACT NO. 99219

N

0 50' 100'

GRAPHIC SCALE

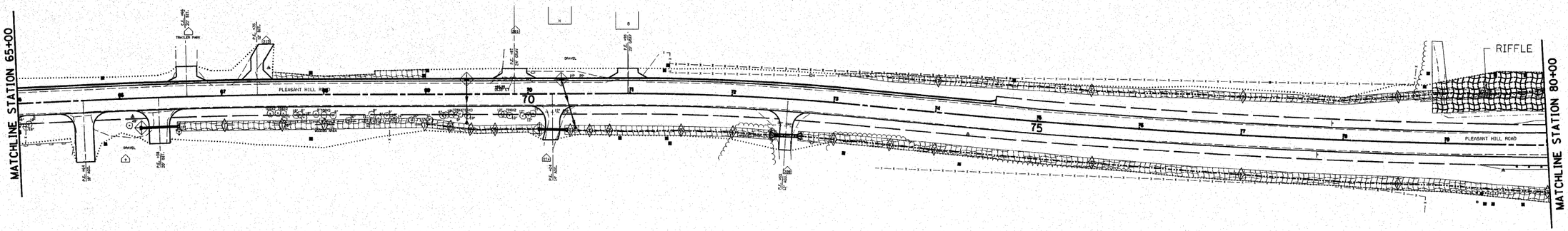


## LEGEND

- EROSION CONTROL BLANKET
- HEAVY DUTY EXCELSIOR BLANKET
- AGGREGATE DITCH
- PERIMETER EROSION BARRIER
- TEMPORARY DITCH CHECK
- INLET AND PIPE PROTECTION


HLR

Rice, Berry and Associates
A Division of Hampton, Lenzini and Renwick, Inc.
Civil & Structural Engineers
801 S. Durkin Drive
Springfield, Illinois 62704
217-546-3400


Account Number
03-47-0001-1

Date: 03-19-07

DESIGNED: L.F.S. | CHECKED: S.W.M. | DRAWN: W.J.S.

# EROSION CONTROL PLAN

**SECTION 99-02118-00-FP**

**F.A.U. 9713 / EAST PLEASANT HILL ROAD**

**JACKSON COUNTY**

| ROUTE | SECTION | COUNTY | TOTAL SHEETS | SHEET NO. |
|---|---|---|---|---|
| FAU 9713 | 99-02118-00-FP | JACKSON | 122 | 49 |
| FED. ROAD DIST. NO. | | ILLINOIS | FED. AID PROJECT- | |

CONTRACT NO. 99219

N

0 50' 100'
GRAPHIC SCALE

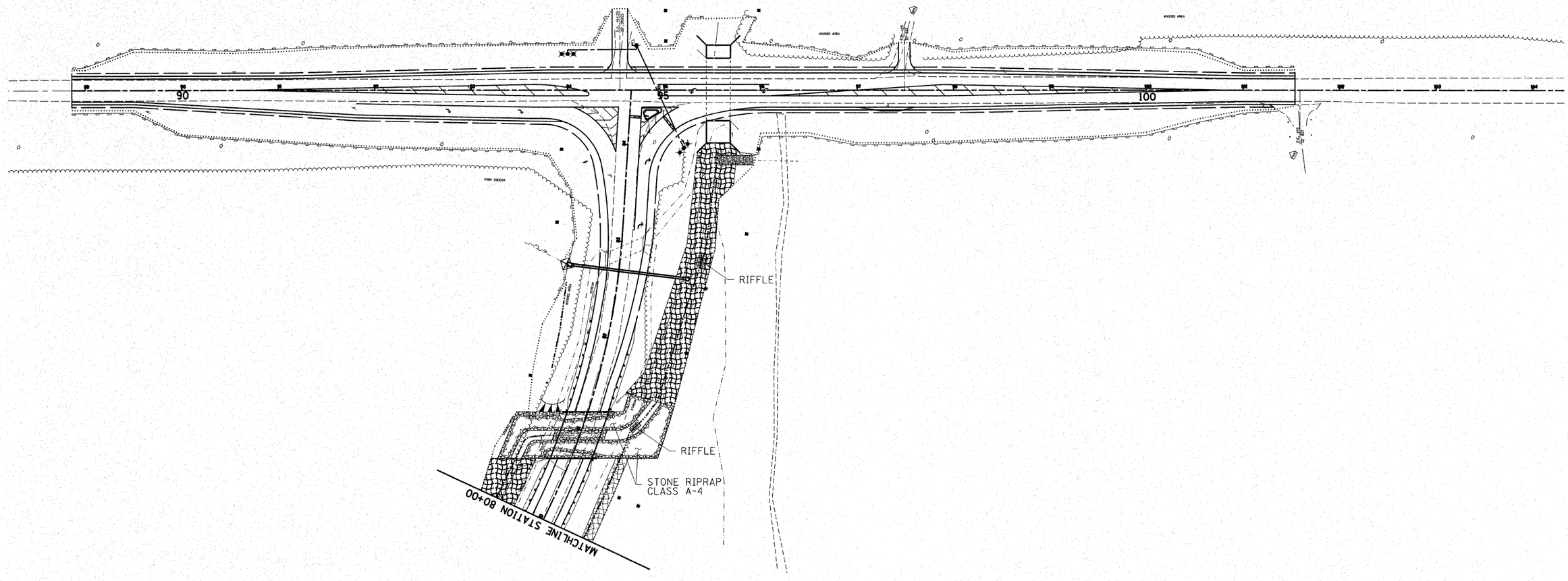


## LEGEND

- HEAVY DUTY EXCELSIOR BLANKET
- EROSION CONTROL BLANKET
- AGGREGATE DITCH
- PERIMETER EROSION BARRIER
- TEMPORARY DITCH CHECK
- INLET AND PIPE PROTECTION


HLR

Rice, Berry and Associates
A Division of Hampton, Lenzini and Renwick, Inc.
Civil & Structural Engineers
801 S. Durkin Drive
Springfield, Illinois 62704
217-546-3400


Account Number
03-47-0001-1

Date: 03-19-07

DESIGNED: L.F.S. | CHECKED: S.W.M. | DRAWN: W.J.S.

# EROSION CONTROL PLAN

**SECTION 99-02118-00-FP**

**F.A.U. 9713 / EAST PLEASANT HILL ROAD**

**JACKSON COUNTY**

| ROUTE NO. | SECTION | COUNTY | TOTAL SHEETS | SHEET NO. |
|---|---|---|---|---|
| FAU 9713 | 99-02118 -00-FP | JACKSON | 122 | 50 |
| FED. ROAD DIST. NO. | | ILLINOIS | FED. AID PROJECT- | |

CONTRACT NO. 99219

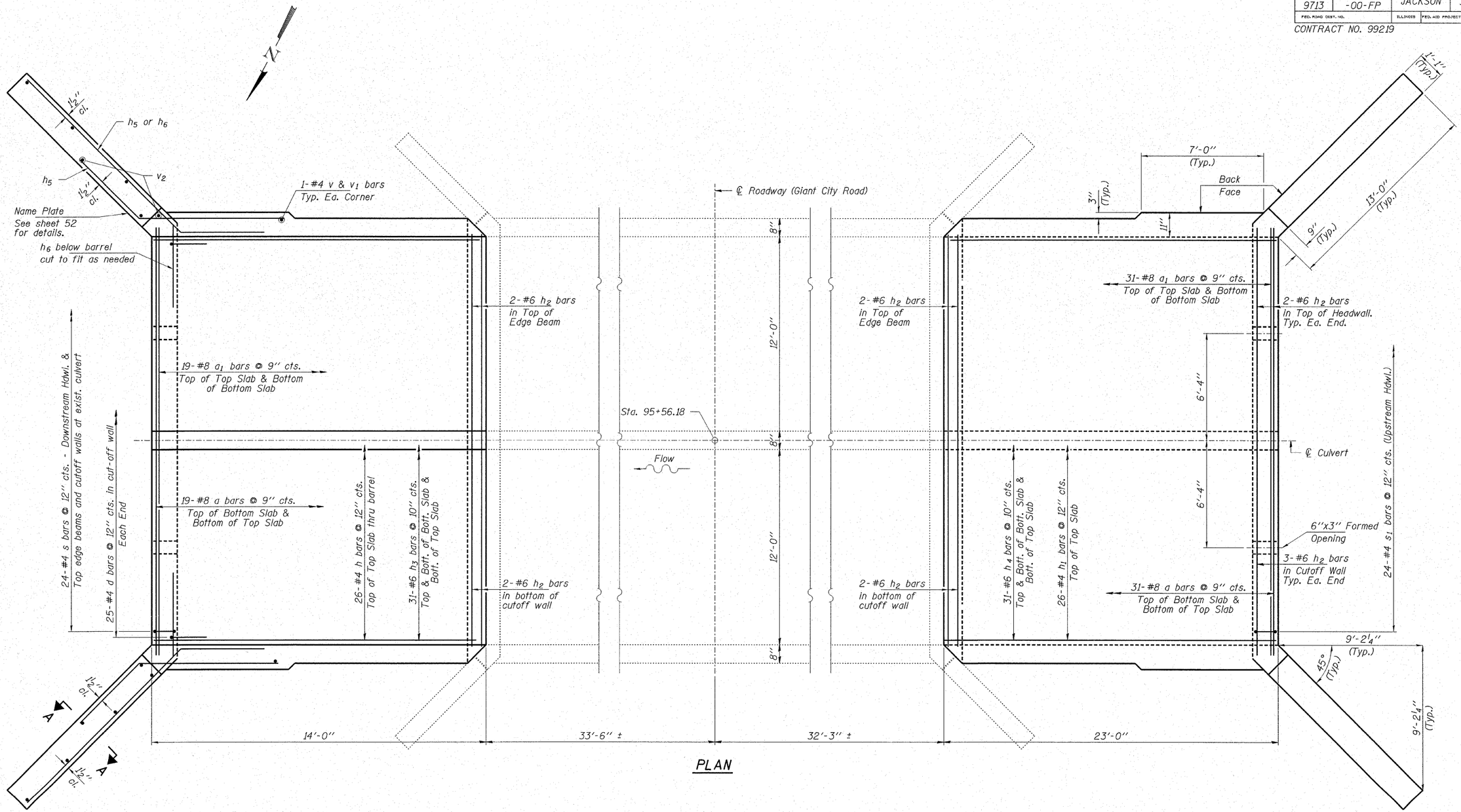


PLAN

## NOTES

Exposed edges shall be beveled ¾".
Reinforcement Bars shall conform to the requirements of AASHTO M-31 or M-322, Grade 60.
All bars shall be epoxy coated.
For Section A-A see Sheet 51.
All construction joints shall be bonded.
A distance of half the length of the wingwall but not less than six feet of the barrel shall be poured monolithically with the wingwalls.
The Contractor shall be responsible for dewatering and diversion of flows during construction of the extension. Dewatering and flow diversion will not be paid for separately. The cost shall be included in Concrete Box Culverts.

## LOADING HS 20-44

## DESIGN STRESSES

f'c = 3,500 psi
f'y = 60,000 psi (Reinf.)

## DESIGN SPECIFICATIONS

2002 AASHTO
& all applicable interims

I certify that to the best of my knowledge, information and belief, this culvert design is structurally adequate for the design loading shown on the plans. The design is an economical one for the style of structure and complies with requirements of the current "AASHTO Standard Specifications for Highway Bridges".

Steven W. Meggenson 4/4/07
ILLINOIS STRUCTURAL NO. 6064

LICENSED STRUCTURAL ENGINEER
STEVEN W. MEGGINSON
081-6064
SPRINGFIELD, IL
STATE OF ILLINOIS

Expires 11-30-08


HAMPTON, LENZINI & RENWICK, INC.
CIVIL & STRUCTURAL ENGINEERS
3085 STEVENSON DRIVE, SUITE 201
SPRINGFIELD, ILLINOIS 62703
(217) 546-3400
ELGIN • SPRINGFIELD


| PROJECT NUMBER: 03-47-0001-I | DATE: 09/28/06 |
|---|---|
| DESIGNED: S.W.M. | CHECKED: T.P.L. | DRAWN: D.S. |

# CULVERT DETAILS

SECTION 99-02118-00-FP
F.A.U. 9713 / EAST PLEASANT HILL ROAD
JACKSON COUNTY
STRUCTURE NO. 039-5001 / STATION 95+56.18

| ROUTE NO. | SECTION | COUNTY | TOTAL SHEETS | SHEET NO. |
|---|---|---|---|---|
| FAU 9713 | 99-02118 -00-FP | JACKSON | 122 | 51 |
| FED. ROAD DIST. NO. | | ILLINOIS | FED. AID PROJECT- | |

CONTRACT NO. 99219

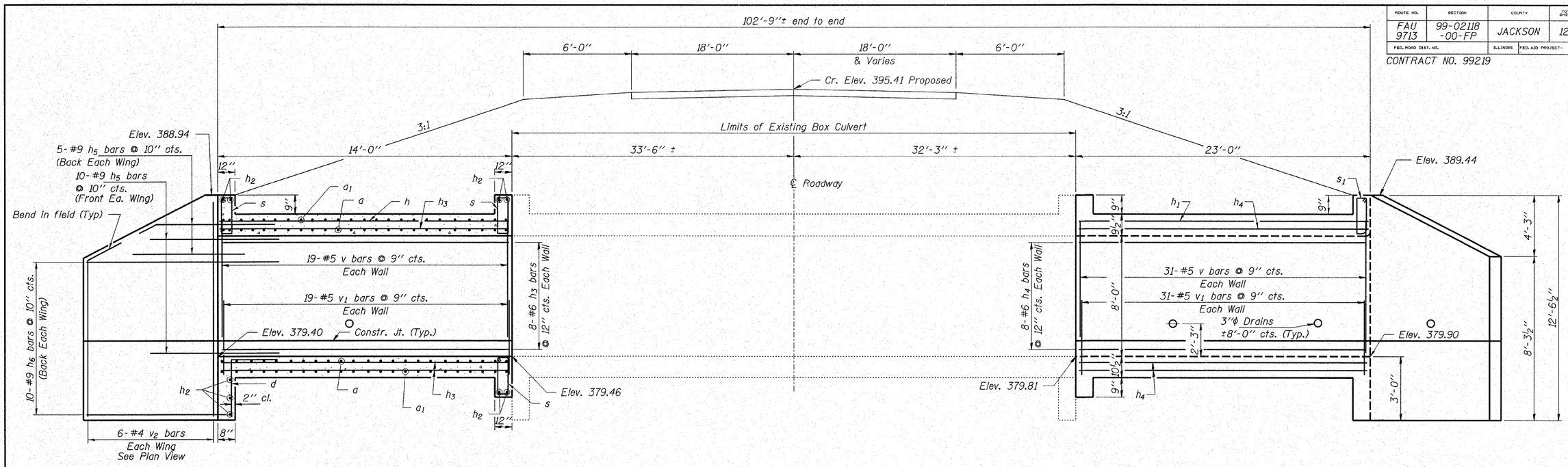


## LONGITUDINAL SECTION
(Looking South)

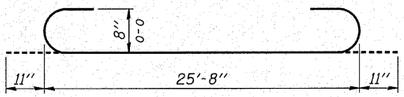


BAR a

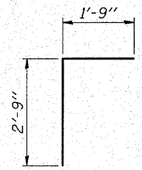


BAR d

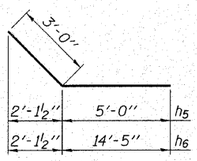


BARS $h_5$ & $h_6$

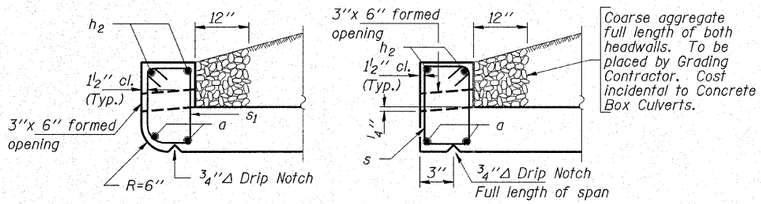


DRAIN DETAIL

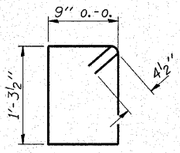


BAR s

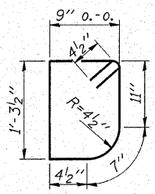


BAR s1

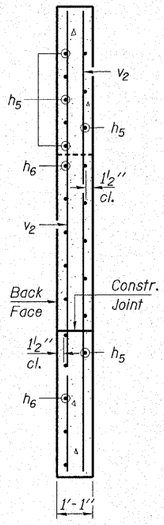


SECTION A-A
Thru Wingwall

## BILL OF MATERIAL

| Bar | No. | Size | Length | Shape |
|---|---|---|---|---|
| a | 100 | #8 | 27'-6" | |
| $a_1$ | 100 | #8 | 25'-8" | |
| | | | | |
| d | 50 | #4 | 4'-6" | |
| | | | | |
| h | 26 | #4 | 13'-8" | |
| $h_1$ | 26 | #4 | 22'-8" | |
| $h_2$ | 18 | #6 | 25'-0" | |
| $h_3$ | 117 | #6 | 13'-8" | |
| $h_4$ | 117 | #6 | 22'-8" | |
| $h_5$ | 60 | #9 | 8'-0" | |
| $h_6$ | 40 | #9 | 17'-5" | |
| | | | | |
| s | 120 | #4 | 4'-10" | |
| $s_1$ | 24 | #4 | 4'-8" | |
| | | | | |
| v | 154 | #5 | 8'-0" | |
| $v_1$ | 154 | #5 | 2'-5" | |
| $v_2$ | 24 | #4 | 12'-2" | |
| | | | | |
| Concrete Box Culverts | | | Cu. Yd. | 112.3 |
| Name Plates | | | Each | 1 |
| Reinforcement Bars, Epoxy Ctd. | | | Pound | 28,370 |
| ¾"ϕ Expansion Bolts | | | Each | 100 |
| Porous Granular Embankment | | | Ton | 425 |

All Bars shall be Epoxy Coated.


HAMPTON, LENZINI & RENWICK, INC.
CIVIL & STRUCTURAL ENGINEERS
3085 STEVENSON DRIVE, SUITE 201
SPRINGFIELD, ILLINOIS 62703
(217) 546-3400
ELGIN • SPRINGFIELD


| PROJECT NUMBER: 03-47-0001-1 | DATE: 02/05/07 |
|---|---|
| DESIGNED: S.W.M. | CHECKED: T.P.L. | DRAWN: D.B. |

# CULVERT DETAILS

**SECTION 99-02118-00-FP**

**F.A.U. 9713 / EAST PLEASANT HILL ROAD**

**JACKSON COUNTY**

**STRUCTURE NO. 039-5001 / STATION 95+56.18**

| ROUTE NO. | SECTION | COUNTY | TOTAL SHEETS | SHEET NO. |
|---|---|---|---|---|
| FAU 9713 | 99-02118 -00-FP | JACKSON | 122 | 52 |
| FED. ROAD DIST. NO. | | ILLINOIS | FED. AID PROJECT- | |

CONTRACT NO. 99219

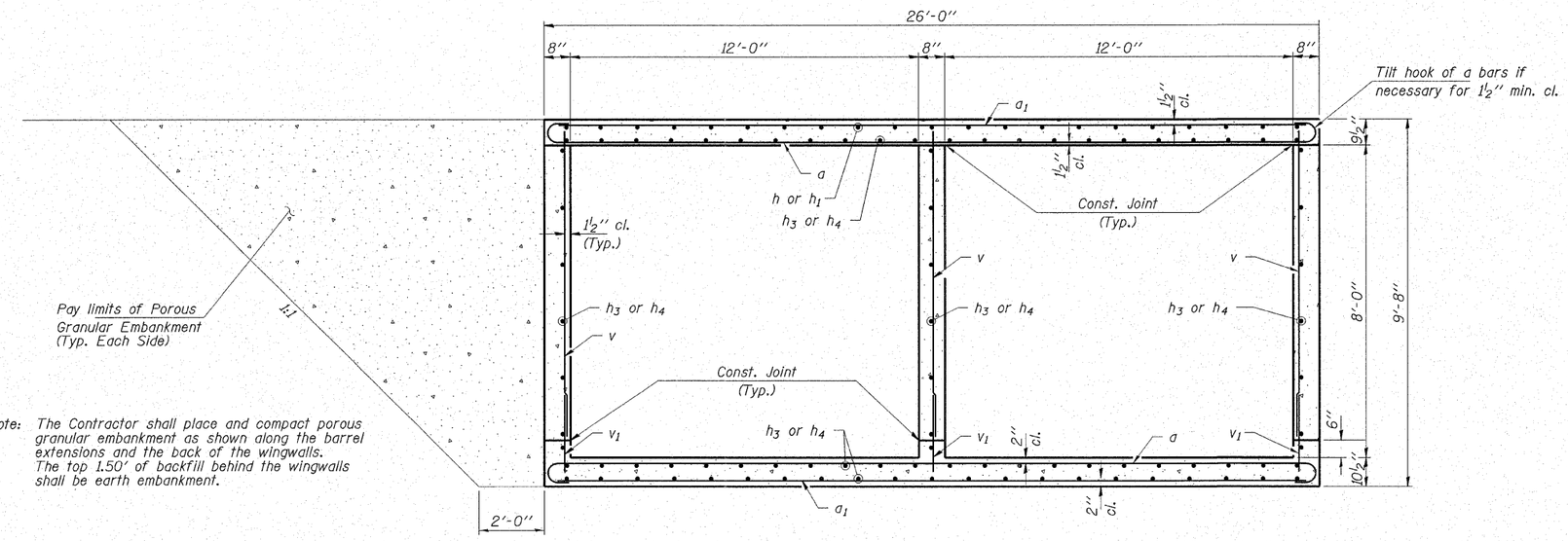


Note: The Contractor shall place and compact porous granular embankment as shown along the barrel extensions and the back of the wingwalls. The top 1.50' of backfill behind the wingwalls shall be earth embankment.

## SECTION THRU BARREL

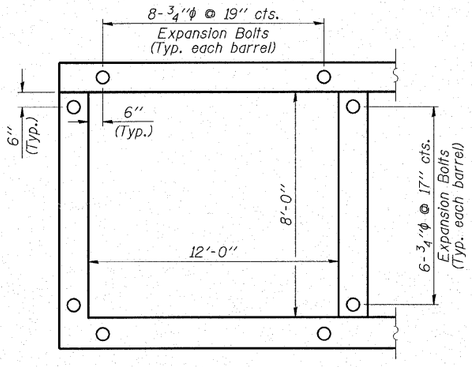


## CROSS SECTION SHOWING EXPANSION BOLTS

Note: Expansion bolts shall be ¾"ϕ hooked bolts. Hooked bolts shall extend a minimum of 9" into new concrete.

F.A.S. 919 / C.H. 12
REBUILT 200_ BY
JACKSON COUNTY
SECTION 99-02118-00-FP
F.A. PROJ. M-HPD-0241(96)
STR. NO. 039-5001
LOADING HS 20

## NAME PLATE

See Std. 515001

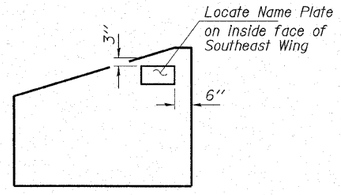


## NAME PLATE LOCATION

## WATERWAY INFORMATION

Drainage Area = 0.8 Sq. Mi. Low Grade Elev. 394.97 @ Sta. 96+80.00

| Flood | Freq. Yr. | Q C.F.S. | Opening Sq. Ft. Exist. | Opening Sq. Ft. Prop. | Natural H.W.E. | Head - Ft. Exist. | Head - Ft. Prop. | Headwater El. Exist. | Headwater El. Prop. |
|---|---|---|---|---|---|---|---|---|---|
| Design | 30 | 650 | 165 | 165 | 386.7 | 0.3 | 0.3 | 387.0 | 387.0 |
| Base | 100 | 180 | 180 | 180 | 387.5 | 0.5 | 0.5 | 388.0 | 388.0 |
| Overtopping | | | | | | | | | |
| Max. Calc. | 500 | 1100 | 190 | 190 | 388.4 | 0.8 | 0.8 | 389.2 | 389.2 |


HAMPTON, LENZINI & RENWICK, INC.
CIVIL & STRUCTURAL ENGINEERS
3085 STEVENSON DRIVE, SUITE 201
SPRINGFIELD, ILLINOIS 62703
(217) 546-3400
ELGIN • SPRINGFIELD


PROJECT NUMBER: 03-47-0001-1 | DATE: 09/29/06
DESIGNED: S.W.M. | CHECKED: T.P.L. | DRAWN: D.B.

# CULVERT DETAILS

SECTION 99-02118-00-FP
F.A.U. 9713 / EAST PLEASANT HILL ROAD
JACKSON COUNTY
STRUCTURE NO. 039-5001 / STATION 95+56.18

| ROUTE NO. | SECTION | COUNTY | TOTAL SHEETS | SHEET NO. |
|---|---|---|---|---|
| FAU 9713 | 99-02118 -00-FP | JACKSON | 122 | 53 |
| FED. ROAD DIST. NO. | | ILLINOIS | FED. AID PROJECT- | |

CONTRACT NO. 99219

BUILT 200_ BY
JACKSON COUNTY
FAU 9713 / C.H. 16
SEC. 99-02118-00-FP
F.A. PROJ. M-HPD-0241(96)
STR. NO. 039-3254
LOADING HS 20

## GENERAL NOTES

Layout of riprap may be varied in the field to suit ground conditions as directed by the Engineer. See sheet 53 for riprap layout.

The Contractor shall drive one steel test pile in a permanent location at the West Abutment, as directed by the Engineer before ordering the remainder of the piles.

The Contractor may substitute Surface Course Mixture for the Leveling Binder Mixture.

Excavation required to construct the abutments shall included in the cost of Concrete Structures. No additional payment will be made for Structure Excavation.

See Sheets 60 & 61 for Borings.

## NAME PLATE

See Std. 515001

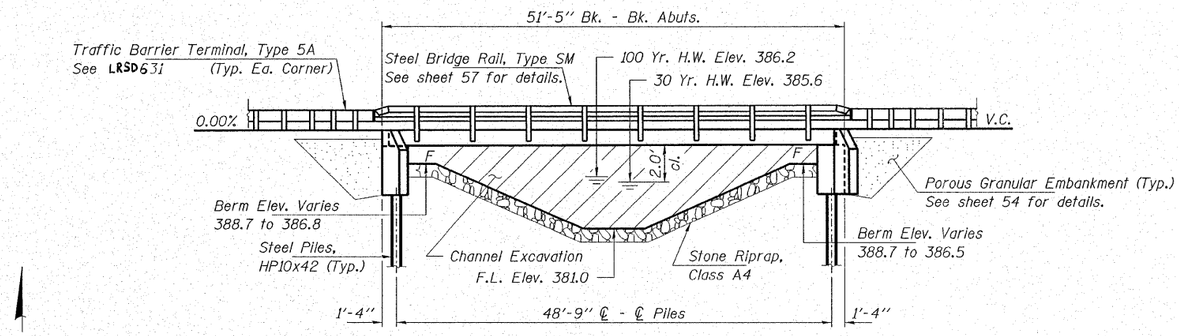


## ELEVATION

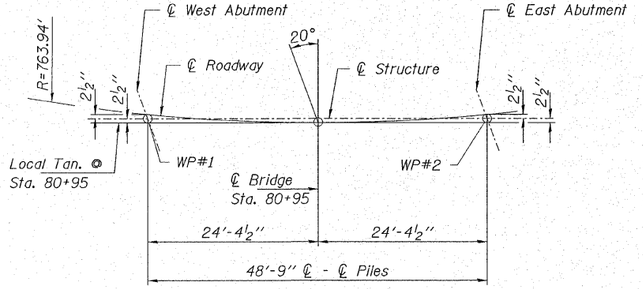


## OFFSET SKETCH

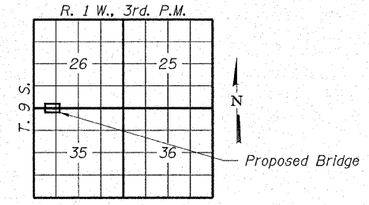


## LOCATION SKETCH

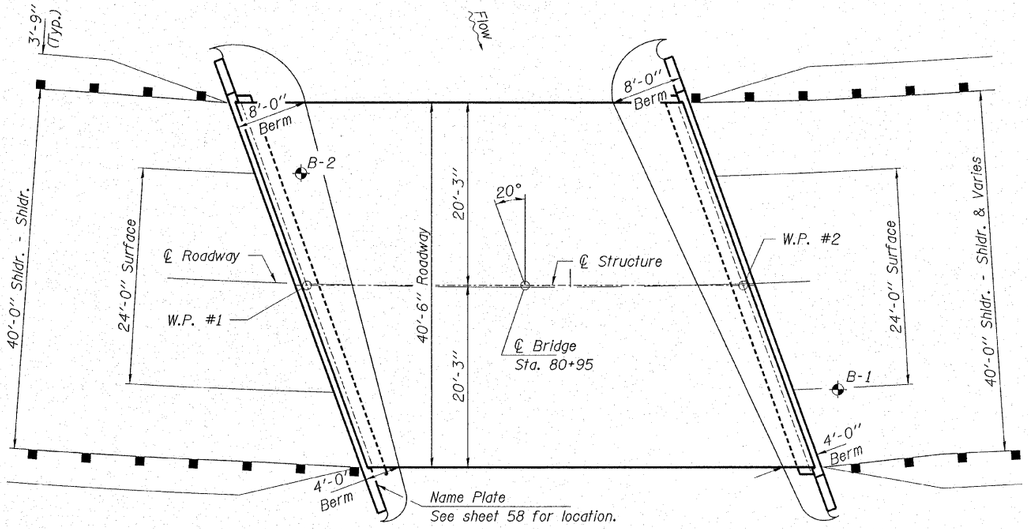


## PLAN

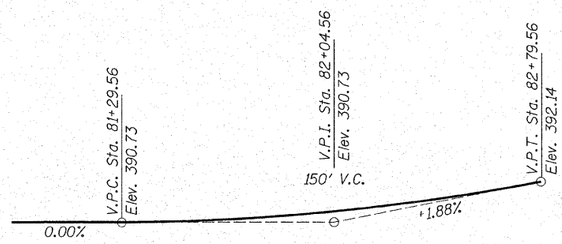


## PROFILE GRADE

## TOTAL BILL OF MATERIAL

| ITEM | UNIT | SUPER | SUB | TOTAL |
|---|---|---|---|---|
| Precast Prestressed Concrete Deck Beams (21" Depth) | Sq. Ft. | 1,950 | | 1,950 |
| Concrete Structures | Cu. Yd. | | 36.2 | 36.2 |
| Reinforcement Bars | Pound | | 4,640 | 4,640 |
| Steel RAILING, Type SM | Foot | 104 | | 104 |
| Name Plates | Each | | 1 | 1 |
| Concrete Encasement | Cu. Yd. | | 3.2 | 3.2 |
| Steel Piles HP10x42 | Foot | | 935 | 935 |
| Test Pile Steel HP10x42 | Each | | 1 | 1 |
| P.C. Mortar Fairing Course | Foot | 150 | | 150 |
| Waterproofing Membrane System | Sq. Yd. | 231 | | 231 |
| Hot-Mix Asphalt Surf. Cse. | Ton | 20 | | 20 |
| Leveling Binder, (Machine Method) | Ton | 5 | | 5 |
| Porous Granular Embankment | Ton | | | 270 |
| Stone Riprap, Class A4 | Ton | | | 670 |
| Stud Shear Connectors | Each | | 48 | 48 |

## DESIGN STRESSES

FIELD UNITS

f'c = 3,500 psi
fy = 60,000 psi (Reinf.)

PRECAST PRESTRESSED UNITS

f'c = 5,000 psi
f'ci = 4,000 psi
f's = 270,000 psi (½"ϕ low lax. strands)
f'si = 201,960 psi (½"ϕ low lax. strands)
fy = 60,000 psi (Reinf.)

Loading HS 20-44
Design Specifications: 2002 AASHTO & all applicable interims.
25#/Sq. Ft. included in dead load for future wearing surface.

## SEISMIC DATA

Seismic Performance Category (SPC) = B
Bedrock Acceleration Coefficient (A) = 0.14g
Site Coefficient (S) = 2.0

## WATERWAY INFORMATION

Drainage Area = 0.6 Sq. Mi. Low Grade Elev. 389.0 © Sta. 80+00

| Flood | Freq. Yr. | Q C.F.S. | Opening Sq. Ft. Exist. | Opening Sq. Ft. Prop. | Natural H.W.E. | Head - Ft. Exist. | Head - Ft. Prop. | Headwater El. Exist. | Headwater El. Prop. |
|---|---|---|---|---|---|---|---|---|---|
| Design | 30 | 520 | 40 | 90 | 385.6 | 3.7 | 0.3 | 389.3 | 385.9 |
| Base | 100 | 680 | 40 | 105 | 386.2 | 3.3 | 0.6 | 389.5 | 386.8 |
| Overtopping | | | | | | | | | |
| Max. Calc. | 500 | 830 | 40 | 115 | 387.0 | 2.6 | 1.1 | 389.6 | 388.1 |

I certify that to the best of my knowledge, information and belief, this bridge design is structurally adequate for the design loading shown on the plans. The design is an economical one for the style of structure and complies with requirements of the current "AASHTO Stanaard Specifications for Highway Bridges".

Steven W. Meggenson 4/4/07
ILLINOIS STRUCTURAL NO. 6064

LICENSED STRUCTURAL ENGINEER
STEVEN W. MEGGINSON
081-6064
SPRINGFIELD, IL
STATE OF ILLINOIS

Expires 11-30-08


HAMPTON, LENZINI & RENWICK, INC.
CIVIL & STRUCTURAL ENGINEERS
3025 STEVENSON DRIVE, SUITE 201
SPRINGFIELD, ILLINOIS 62703
(217) 546-3400
ELGIN • SPRINGFIELD


| PROJECT NUMBER: 03-47-0001-1 | DATE: 03/13/07 |
|---|---|
| DESIGNED: S.M.S. | CHECKED: S.W.M. | DRAWN: D.B. |

# GENERAL PLAN AND ELEVATION

SECTION 99-02118-00-FP
F.A.U. 9713 / EAST PLEASANT HILL ROAD
JACKSON COUNTY
STRUCTURE NO. 039-3254 / STATION 80+95

| ROUTE NO. | SECTION | COUNTY | TOTAL SHEETS | SHEET NO. |
|---|---|---|---|---|
| FAU 9713 | 99-02118 -00-FP | JACKSON | 122 | 54 |
| FED. ROAD DIST. NO. | | ILLINOIS | FED. AID PROJECT- | |

CONTRACT NO. 99219

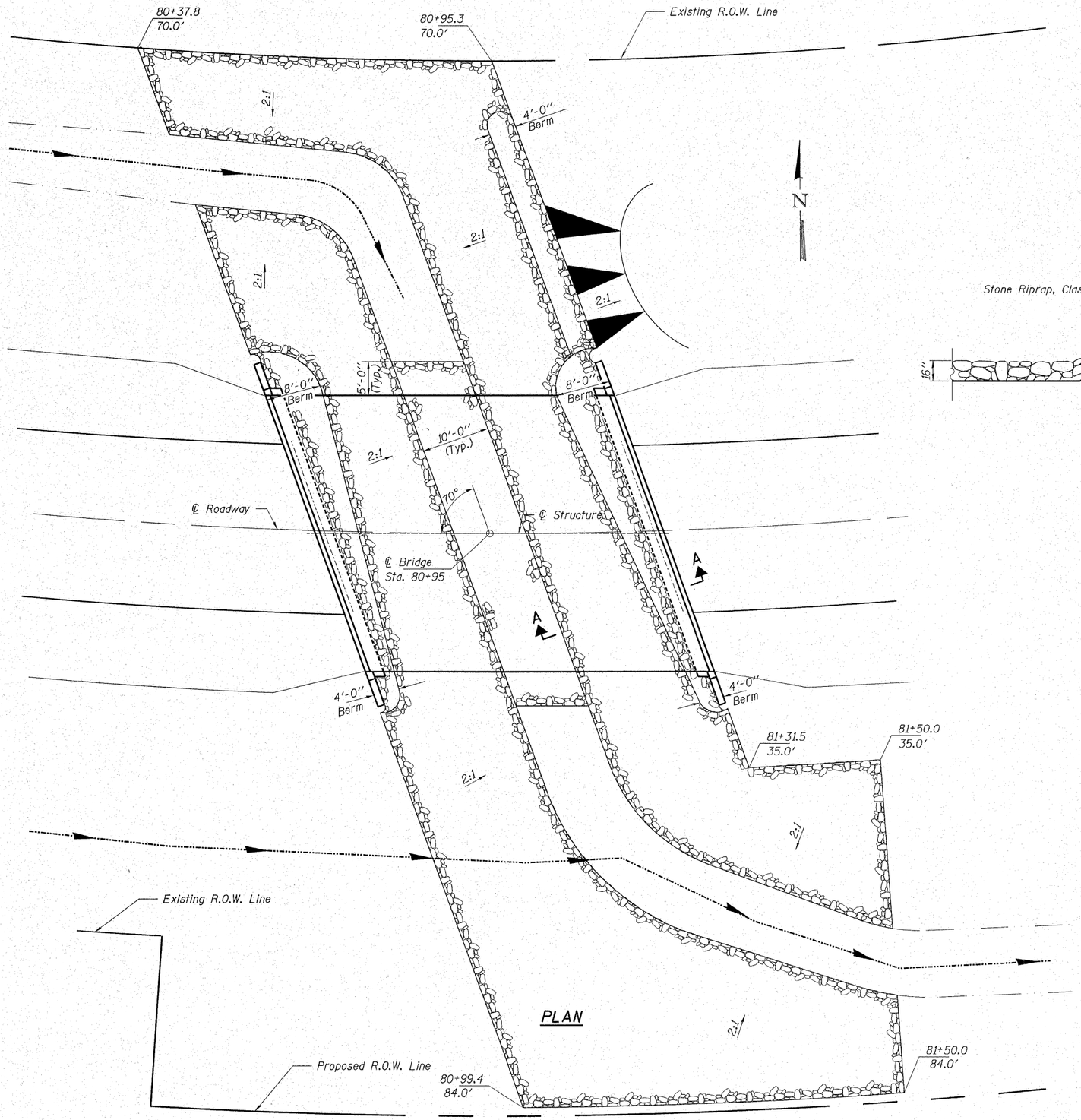


PLAN

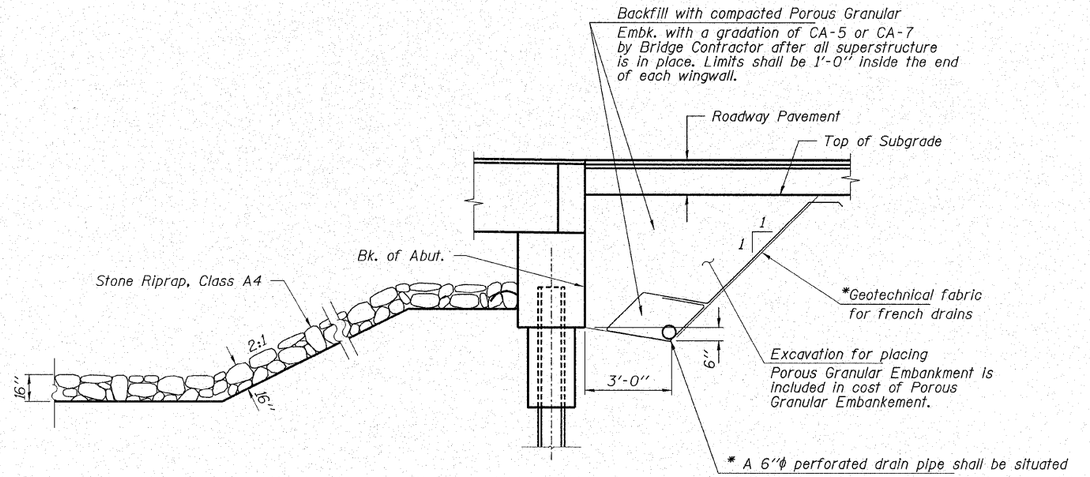


SECTION A-A
EMBANKMENT DETAIL AT ABUTMENTS

* Included in the cost of Porous Granular Embankment

* Cost included with unit price for Porous Granular Embankment.


HAMPTON, LENZINI & RENWICK, INC.
CIVIL & STRUCTURAL ENGINEERS
3085 STEVENSON DRIVE, SUITE 201
SPRINGFIELD, ILLINOIS 62703
(217) 546-3400
ELGIN • SPRINGFIELD


| PROJECT NUMBER: 03-47-0001-1 | DATE: 03/13/07 |
|---|---|
| DESIGNED: S.M.S. | CHECKED: S.W.M. |
| | DRAWN: D.B. |

# RIPRAP LAYOUT

SECTION 99-02118-00-FP

F.A.U. 9713 / EAST PLEASANT HILL ROAD

JACKSON COUNTY

STRUCTURE NO. 039-3254 / STATION 80+95

| ROUTE NO. | SECTION | COUNTY | TOTAL SHEETS | SHEET NO. |
|---|---|---|---|---|
| FAU 9713 | 99-02118 -00-FP | JACKSON | 122 | 55 |
| FED. ROAD DIST. NO. | | ILLINOIS | FED. AID PROJECT- | |

CONTRACT NO. 99219

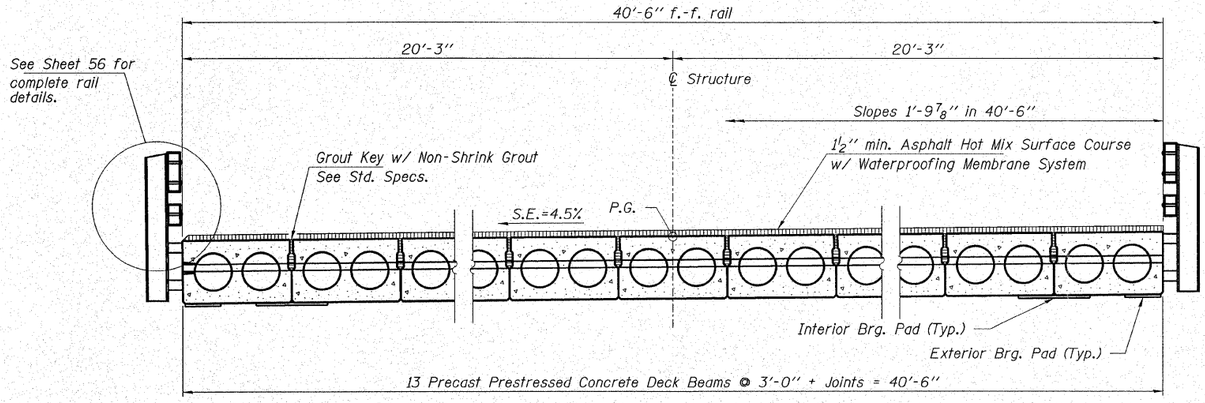


## CROSS SECTION

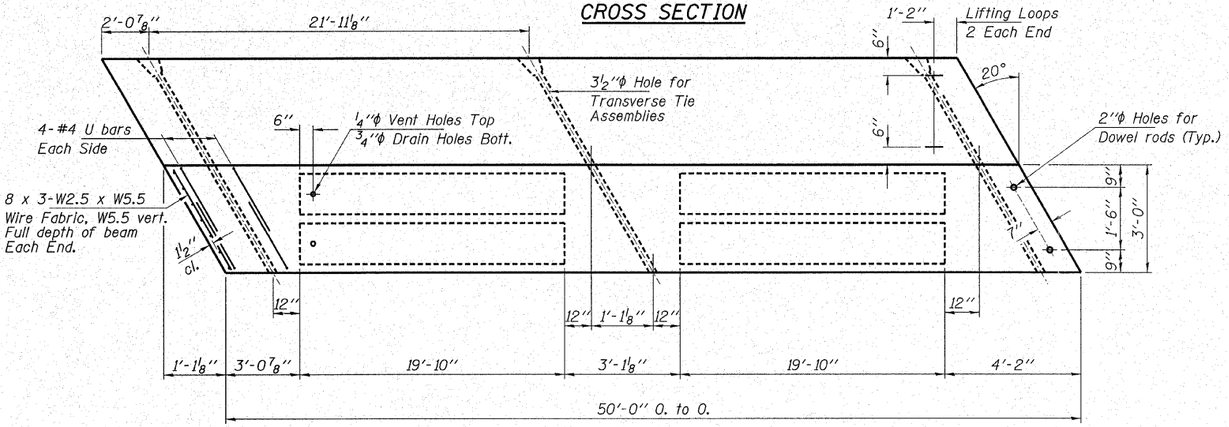


## PLAN

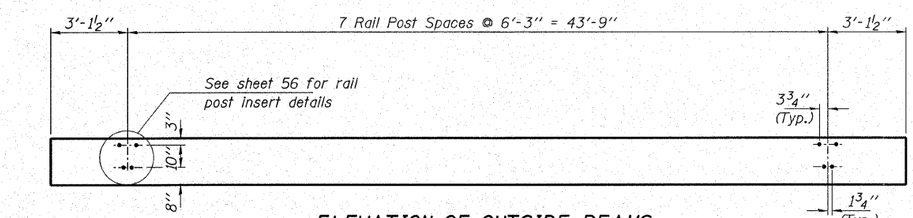


## ELEVATION OF OUTSIDE BEAMS

Showing Rail Post Spacing

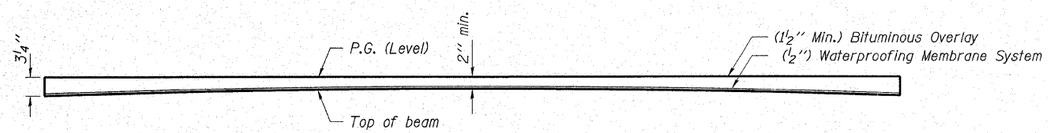


## ANTICIPATED CAMBER DIAGRAM

Int: Interior Beam
Ext: Exterior Beam

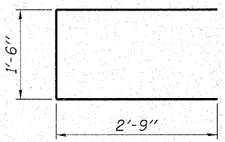


## BAR U

Omit key on exterior face of outside beams.

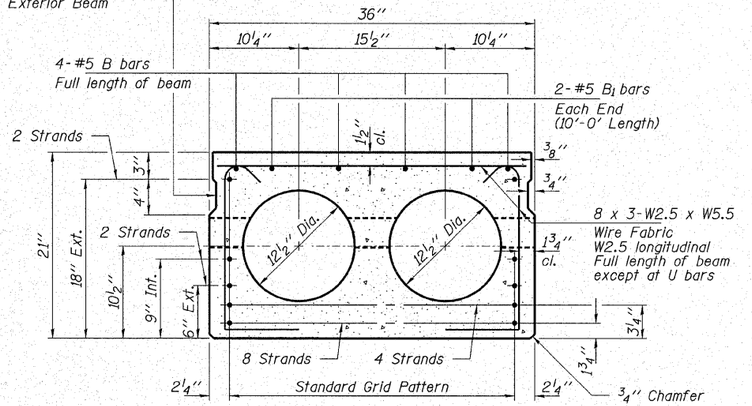


## TYPICAL SECTION

Interior Beam (11)
14-1/2"ϕ Strands, Each Strand Stressed to 30,900 Lbs.
8-Strands 1 3/4" up, 4-Strands 3 1/4" up, 2-Strands 9" up

Exterior Beam (2)
16-1/2"ϕ Strands, Each Strand Stressed to 30,900 Lbs.
8-Strands 1 3/4" up, 4-Strands 3 1/4" up, 2-Strands 6" up, 2-Strands 18" up

Note: Place strands symetrically about ℄ of beam.

Note:
See sheet 54 for General Notes and Superstructure Details.

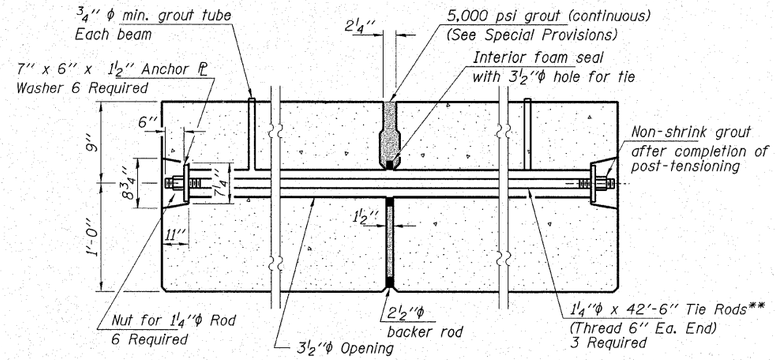


## TYPICAL POST-TENSIONED TRANSVERSE TIE ROD DETAIL

1 1/4"ϕ Threaded Bar tensioned to 120 kip max. transfer stress (Lockoff)

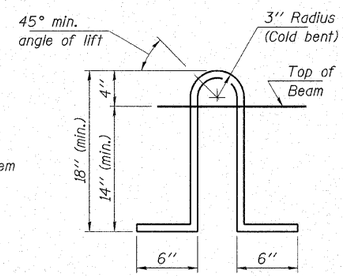


## LIFTING LOOP DETAIL

Approved alternate may be substituted for the above.

## BILL OF MATERIAL

| ITEM | UNIT | QUANTITY |
|---|---|---|
| Precast Prestressed Concrete Deck Beams (21" Depth) | Sq. Ft. | 1,950 |
| Waterproofing Membrane System | Sq. Yd. | 231 |
| P.C. Mortar Fairing Course | Foot | 150 |
| Hot Mix Asphalt Surface Course | Ton | 20 |
| * Leveling Binder, (Machine Method) | Ton | 5 |

* Hot-Mix Asphalt Surf. Cse. may be substituted for Leveling Binder.
** Tie Rod length shall be verified by fabricator in shop drawings.


HAMPTON, LENZINI & RENWICK, INC.
CIVIL & STRUCTURAL ENGINEERS
3085 STEVENSON DRIVE, SUITE 201
SPRINGFIELD, ILLINOIS 62703
(217) 546-3400
ELGIN • SPRINGFIELD


| PROJECT NUMBER: 03-47-0001-i | DATE: 02/05/07 |
|---|---|
| DESIGNED: S.M.S. | CHECKED: S.W.M. |
| DRAWN: D.B. | |

# SUPERSTRUCTURE

**SECTION 99-02118-00-FP**

**F.A.U. 9713 / EAST PLEASANT HILL ROAD**

**JACKSON COUNTY**

**STRUCTURE NO. 039-3254 / STATION 80+95**

| ROUTE NO. | SECTION | COUNTY | TOTAL SHEETS | SHEET NO. |
|---|---|---|---|---|
| FAU 9713 | 99-02118 -00-FP | JACKSON | 122 | 56 |
| FED. ROAD DIST. NO. | | ILLINOIS | FED. AID PROJECT- | |

CONTRACT NO. 99219

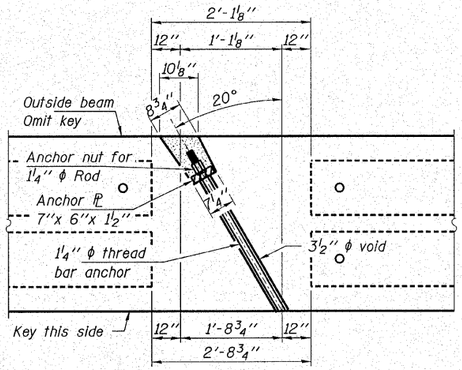


PLAN AT POST-TENSIONED TRANSVERSE TIE ROD

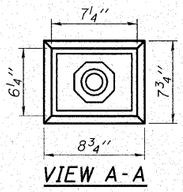


VIEW A-A

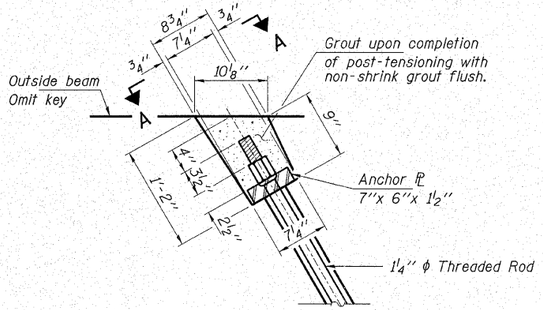


PLAN AT POST-TENSIONED TRANSVERSE TIE ROD

## NOTES

Prestressing steel shall be uncoated high strength, low relaxation 7-wire strand, Grade 270. The nominal diameter shall be 1/2" and the nominal cross-sectional area shall be 0.153 sq. in.
Lifting loops shall be 7-wire stress relieved 2-1/2"ϕ-270 ksi strands, as shown.
Reinforcement bars shall conform to the requirements of AASHTO M-31 or M-322 Grade 60.
The bearing seat surfaces shall be adjusted by shimming to assure firm and even bearing. Two 1/8" fabric adjusting shims of the dimensions of the Exterior Bearing Pad shall be provided for each bearing.
Keyway surfaces shall be cleaned to remove form oil or other bond breaking material prior to shipment of the beams. Cleaning shall be done by sandblasting the keyway areas between top of the beam and the bottom edge of the key.
Required Release Strength, f'ci, shall be 4,000 p.s.i.

## POST-TENSIONING NOTES

Threaded bar post-tensioning tie rods to be 1 1/4"ϕ diameter, ultimate stress 150 ksi (Ultimate Strength 187.5 k). Conforming to ASTM A722 Steel hot rolled and proof stressed. The bar deformations shall conform to the requirements of ASTM A615.
Anchor plates, couplers and nuts shall exceed the requirements of ACI 318 and AASHTO Standard Specifications for Highway Bridges, 2002, Section 9, Article 9.27 Post Tensioning Anchorages and Couplers.
All threaded bars shall be stressed to not more than 40 kips (temporary) and not more than 120 kips at lockoff (transfer).
The Contractor must assure tie holes are free from obstructions as beams are set in place and before and after keyways are grouted.
The interior foam spacer/seal shall consist of a flexible, resilient material. The seal shall be anchored to one side of a deck beam before the beams are set in place. The shape shall be circular inorder to seal the transverse openings from leakage of grout during keyway grouting.
The Contractor may place a 1" to 2" depth of grout and allow to set up during keyway grouting. The remainder of the keyway height can then be filled with grout.
The Contractor shall have the option of post-tensioning using a 7-wire strand system. The system shall conform to the specified loading and must be approved by the Engineer. End anchor shall be detailed in shop drawings.
Voids around threaded bar to be grouted after post-tensioning is complete. See Special Provisions for grout and grouting pressures.

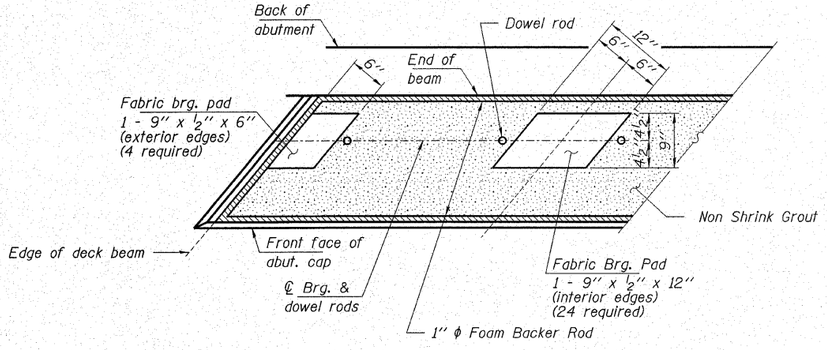


GROUTED BEARING SEAT AND BEARING PAD DETAIL

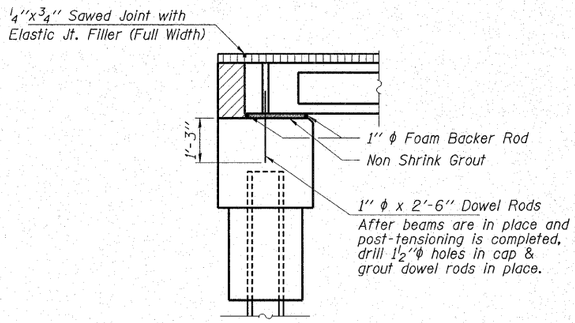


SECTION AT ABUTMENTS
℄ Rt. L's


HAMPTON, LENZINI & RENWICK, INC.
CIVIL & STRUCTURAL ENGINEERS
3085 STEVENSON DRIVE, SUITE 201
SPRINGFIELD, ILLINOIS 62703
(217) 546-3400
ELGIN • SPRINGFIELD


| PROJECT NUMBER: 03-47-0001-1 | | DATE: 02/05/07 |
|---|---|---|
| DESIGNED: S.M.S. | CHECKED: S.W.M. | DRAWN: D.B. |

# SUPERSTRUCTURE DETAILS

SECTION 99-02118-00-FP
F.A.U. 9713 / EAST PLEASANT HILL ROAD
JACKSON COUNTY
STRUCTURE NO. 039-3254 / STATION 80+95

| ROUTE NO. | SECTION | COUNTY | TOTAL SHEETS | SHEET NO. |
|---|---|---|---|---|
| FAU 9713 | 99-02118 -00-FP | JACKSON | 122 | 57 |
| FED. ROAD DIST. NO. | | ILLINOIS | FED. AID PROJECT- | |

CONTRACT NO. 99219

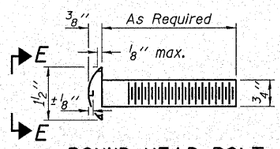


## ROUND HEAD BOLT

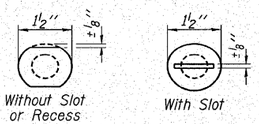


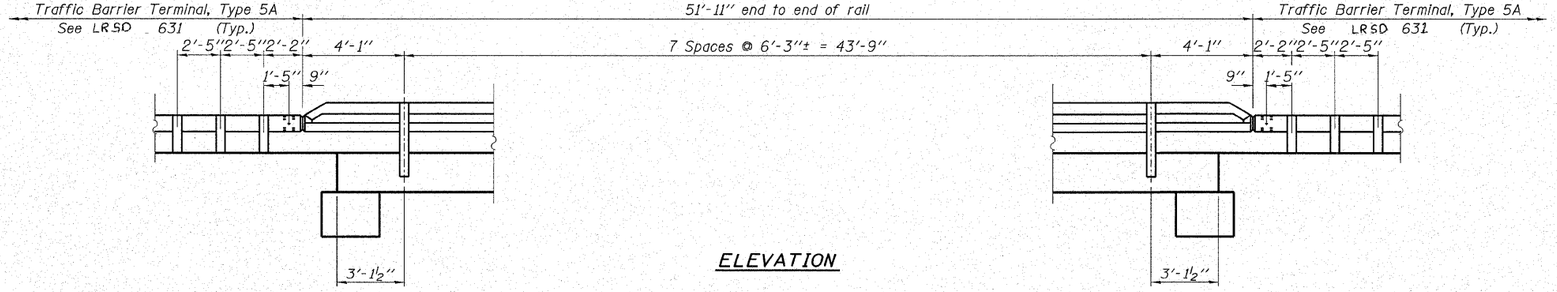


## ELEVATION

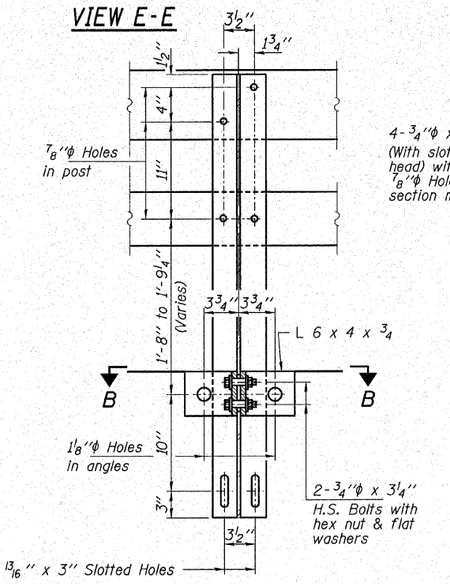


## SECTION A-A

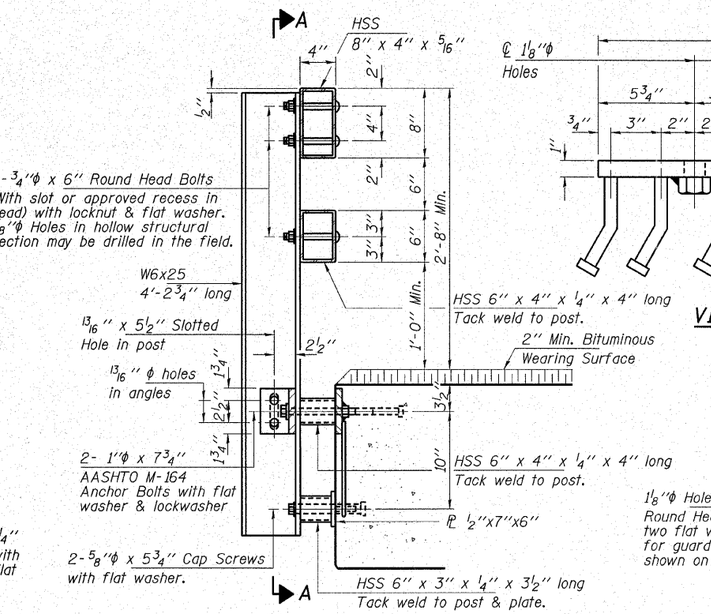


## SECTION AT RAIL POST

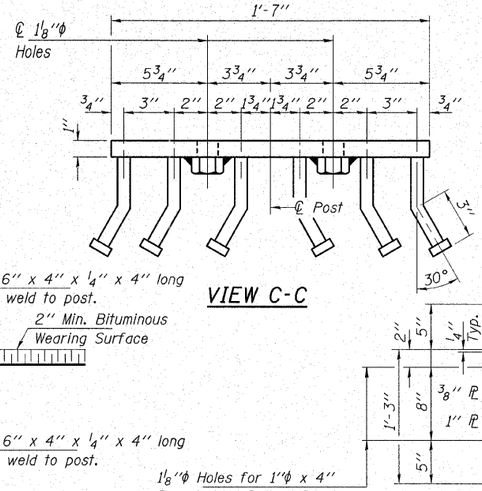


## VIEW C-C

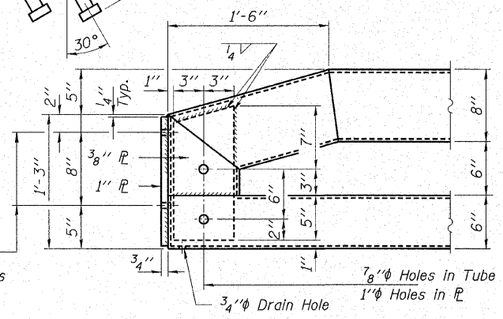





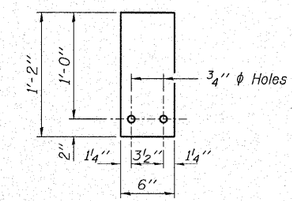


## 1/4" SHIM PLATE

## NOTES

Hollow structural sections shall conform to the requirements of ASTM designation A 500 Grade B Structural Steel Tubing and shall meet the longitudinal CVN requirements of 15 ft-lbs at 0° F.

All other steel shapes and plates shall conform to the requirements of AASHTO M 270, Grade 36 except posts and angles shall conform to AASHTO M 270, Grade 50.

Bolts, cap screws, and nuts shall conform to the requirements of ASTM designation A 307 except for high strength bolts, nuts and washers noted which shall conform to AASHTO M 164.

All bolts, nuts, cap screws, washers and lockwashers shall be galvanized according to AASHTO M 232.

All posts, railing, rail splices, anchor devices and angles shall be galvanized after shop fabrication according to AASHTO M 111 and ASTM A 385. Galvanized rail shall not be painted.

Railing shall be according to Section 509 of the Standard Specifications, except as noted, and will be paid for at the contract unit price per foot for STEEL BRIDGE RAIL, TYPE SM.

All field drilled holes shall be coated with an approved zinc rich paint before erection.

The 2" x 7" x 6" plates that come in contact with concrete shall receive two coats of asphalt paint conforming to Section 1060.07 Type II or place 1/8" fabric bearing pads between the plates and concrete.

The 3/4" ϕ high strength bolts used to connect the 6 x 4 x 3/4 angles to the post shall be tightened according to Art. 505.04(f)(2) of the Standard Specifications. The 1" ϕ high strength bolts connecting the angles to the concrete shall be tightened to a snug fit and given an additional 1/8 turn. The 5/8" ϕ cap screws in bottom of posts shall be tightened to a snug fit only.

For multi-span bridges, sufficient 1/4" x 6" x 1'-2" galvanized steel shims shall be provided to align rail between adjacent spans. Cost included with STEEL BRIDGE RAIL, Type SM.

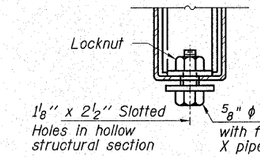


## RAIL SPLICE CONNECTION AT EXPANSION JT.

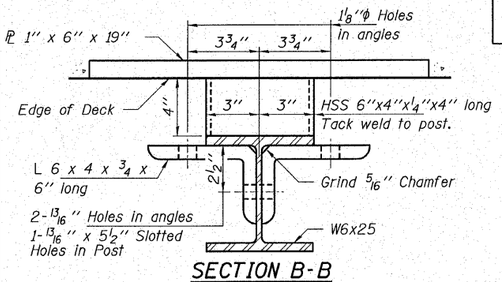


## SECTION B-B

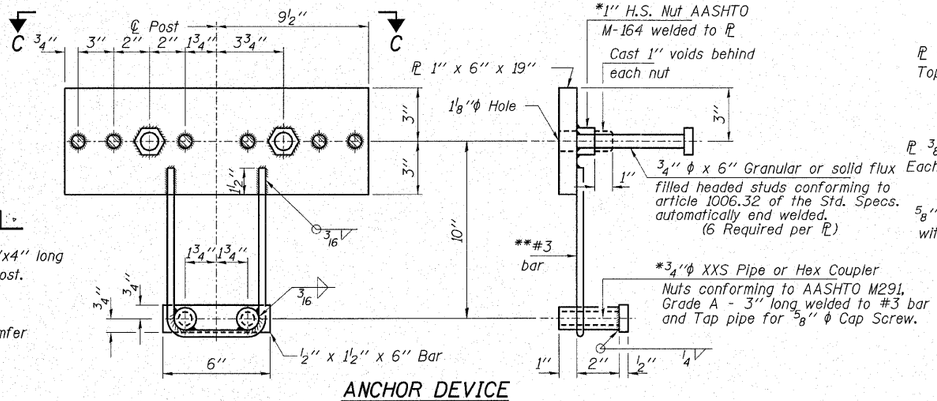


## ANCHOR DEVICE

** Whenever the lower insert assemblies interfere with strand locations, the #3 bars shall be cut and adjusted in order to allow raising or lowering of the lower inserts. Maximum adjustment not to exceed 1/2".

* Threaded areas shall be plugged or blocked off during casting of beam. Galvanized after fabrication.

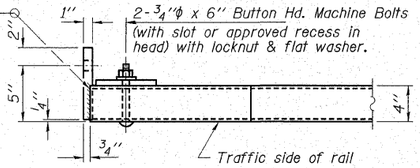


## END OF RAIL DETAILS

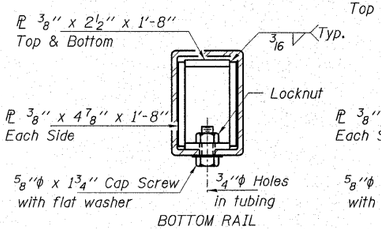


## SECTION AT RAIL SPLICE

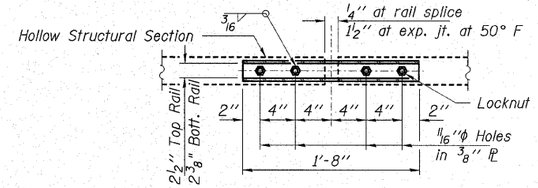


## PLAN-BOTT. SPLICE PL TYPICAL

## BILL OF MATERIAL

| Item | Unit | Quantity |
|---|---|---|
| Steel Bridge Rail, Type SM | Foot | 104 |


HAMPTON, LENZINI & RENWICK, INC.
CIVIL & STRUCTURAL ENGINEERS
3085 STEVENSON DRIVE, SUITE 201
SPRINGFIELD, ILLINOIS 62703
(217) 546-3400
HLR
ELGIN • SPRINGFIELD


| PROJECT NUMBER: 03-47-0001-i | DATE: 10/03/06 |
|---|---|
| DESIGNED: S.M.S. | CHECKED: S.W.M. | DRAWN: D.B. |

# RAILING DETAILS

**SECTION 99-02118-00-FP**

**F.A.U. 9713 / EAST PLEASANT HILL ROAD**

**JACKSON COUNTY**

**STRUCTURE NO. 039-3254 / STATION 80+95**

| ROUTE NO. | SECTION | COUNTY | TOTAL SHEETS | SHEET NO. |
|---|---|---|---|---|
| FAU 9713 | 99-02118 -00-FP | JACKSON | 122 | 58 |
| FED. ROAD DIST. NO. | | ILLINOIS | FED. AID PROJECT- | |

CONTRACT NO. 99219

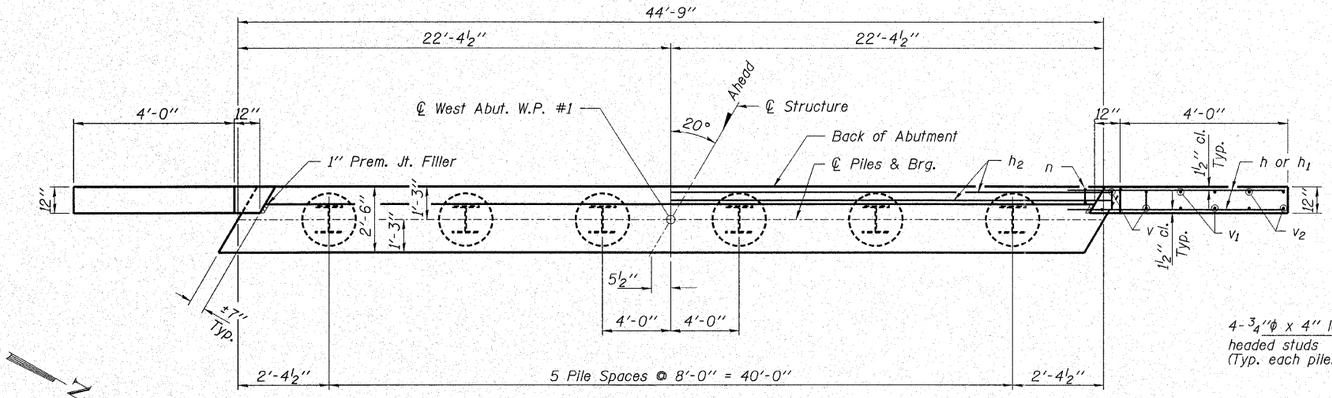


## PLAN

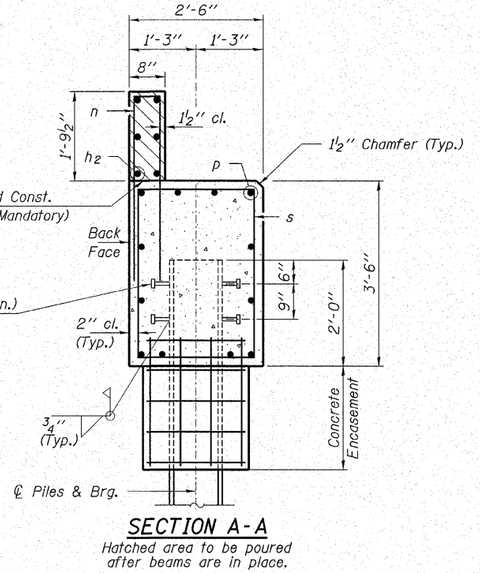


## SECTION A-A

*Hatched area to be poured after beams are in place.*

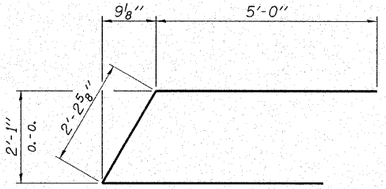


## BAR u

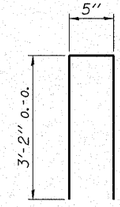


## BAR n

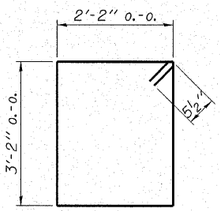


## BAR s

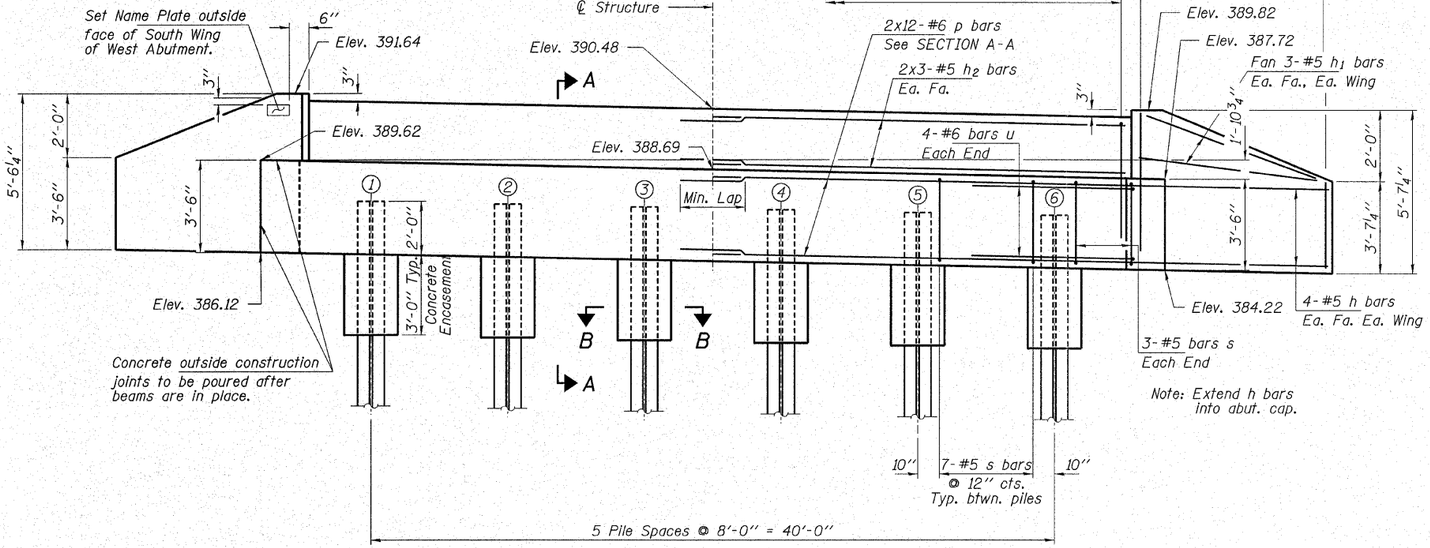


## ELEVATION

*(Looking West)*

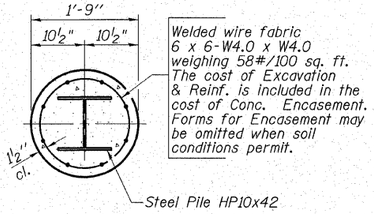


## SECTION B-B

## MIN. BAR LAP

#5 - 2'-2"
#6 - 2'-7"

## BILL OF MATERIAL - W. ABUT.

| BAR | NO. | SIZE | LENGTH | SHAPE |
|---|---|---|---|---|
| h | 16 | #5 | 5'-9" | |
| $h_1$ | 12 | #5 | 4'-9" | |
| $h_2$ | 12 | #5 | 23'-4" | |
| n | 45 | #5 | 6'-9" | |
| p | 24 | #6 | 23'-6" | |
| s | 41 | #5 | 11'-7" | |
| u | 8 | #6 | 12'-3" | |
| v | 8 | #4 | 5'-2" | |
| $v_1$ | 8 | #4 | 4'-3" | |
| $v_2$ | 8 | #4 | 3'-3" | |
| Concrete Structures | | Cu. Yd. | 18.1 | |
| Reinforcement Bars | | Pound | 2,320 | |
| Steel Piles HP10x42 | | Foot | 425 | |
| Test Pile Steel HP10x42 | | Each | 1 | |
| Name Plates | | Each | 1 | |
| Concrete Encasement | | Cu. Yd. | 1.6 | |
| Stud Shear Connectors | | Each | 24 | |

## ELEVATIONS

| Location | Pile 1 | Pile 2 | Pile 3 | Pile 4 | Pile 5 | Pile 6 |
|---|---|---|---|---|---|---|
| Top of Pile | 388.02 | 388.68 | 387.34 | 387.00 | 386.66 | 386.32 |
| Bott. of Encasement | 383.02 | 383.68 | 382.34 | 382.00 | 381.66 | 381.32 |

## PILE DATA

Type_____Steel HP10x42
No. Req'd._____6*
Capacity_____Drive to Refusal
Estimated Lengths_____85 Feet/Pile

* Includes one test pile to be driven in a permanent location at the West Abutment.


HAMPTON, LENZINI & RENWICK, INC.
CIVIL & STRUCTURAL ENGINEERS
3085 STEVENSON DRIVE, SUITE 201
SPRINGFIELD, ILLINOIS 62703
(217) 546-3400
ELGIN • SPRINGFIELD


| PROJECT NUMBER: 03-47-0001-1 | DATE: 02/05/07 |
|---|---|
| DESIGNED: S.M.S. | CHECKED: S.W.M. |
| | DRAWN: D.B. |

# WEST ABUTMENT

**SECTION 99-02118-00-FP**

**F.A.U. 9713 / EAST PLEASANT HILL ROAD**

**JACKSON COUNTY**

**STRUCTURE NO. 039-3254 / STATION 80+95**

| ROUTE NO. | SECTION | COUNTY | TOTAL SHEETS | SHEET NO. |
|---|---|---|---|---|
| FAU 9713 | 99-02118 -00-FP | JACKSON | 122 | 59 |
| FED. ROAD DIST. NO. | | ILLINOIS | FED. AID PROJECT- | |

CONTRACT NO. 99219

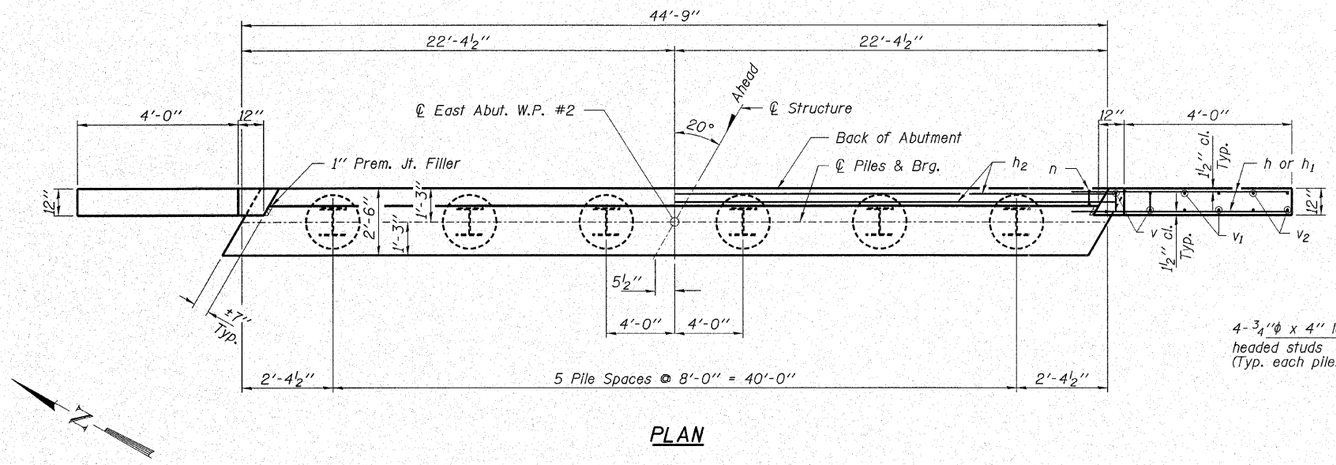


## PLAN

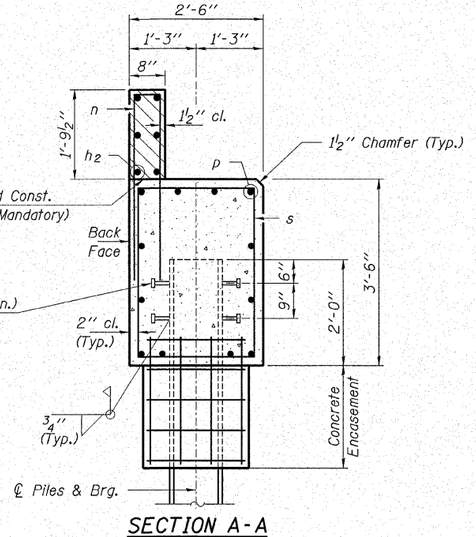


## SECTION A-A

*Hatched area to be poured after beams are in place.*

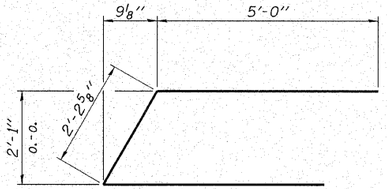


## BAR u

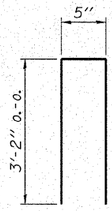


## BAR n

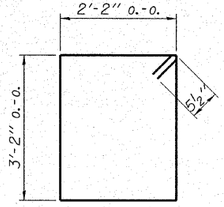


## BAR s

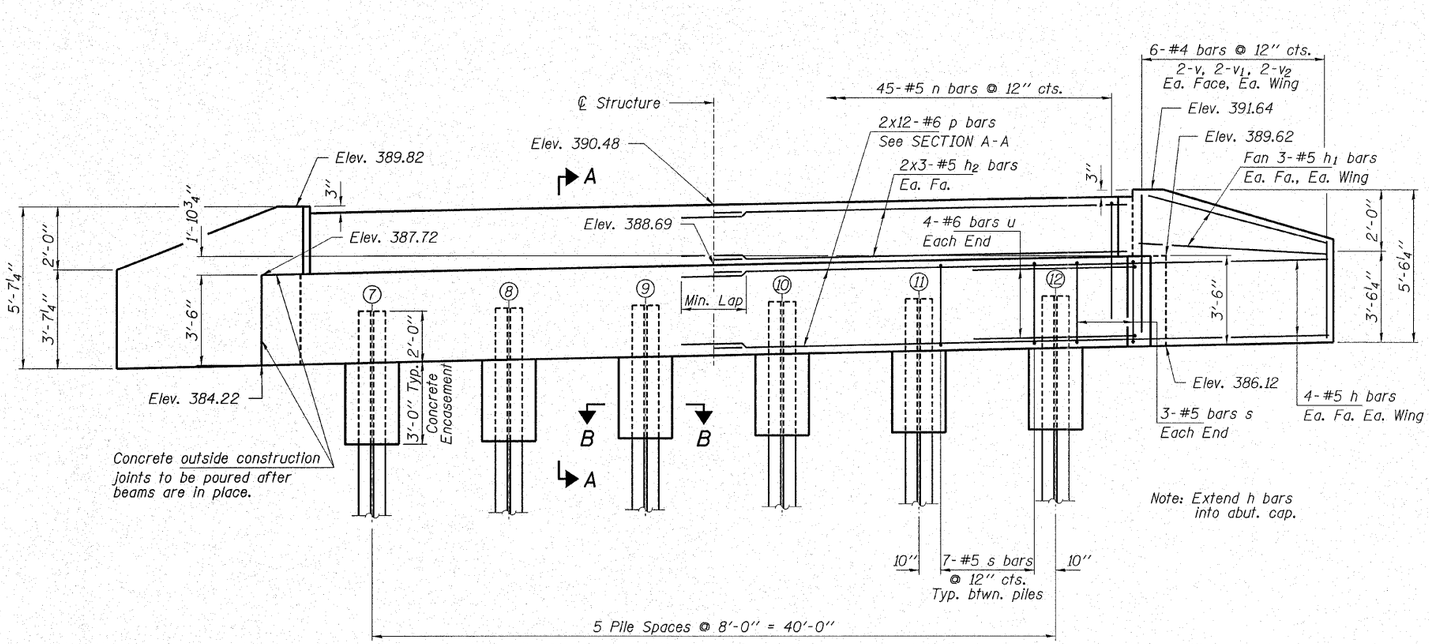


## ELEVATION

*(Looking East)*

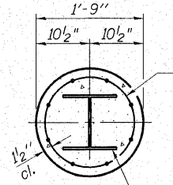


## SECTION B-B

## MIN. BAR LAP

#5 - 2'-2"
#6 - 2'-7"

## BILL OF MATERIAL - E. ABUT.

| BAR | NO. | SIZE | LENGTH | SHAPE |
|---|---|---|---|---|
| h | 16 | #5 | 5'-9" | — |
| $h_1$ | 12 | #5 | 4'-9" | — |
| $h_2$ | 12 | #5 | 23'-4" | — |
| n | 45 | #5 | 6'-9" | ⊓ |
| p | 24 | #6 | 23'-6" | — |
| s | 41 | #5 | 11'-7" | □ |
| u | 8 | #6 | 12'-3" | ⌓ |
| v | 8 | #4 | 5'-2" | — |
| $v_1$ | 8 | #4 | 4'-3" | — |
| $v_2$ | 8 | #4 | 3'-3" | — |
| Concrete Structures | | | Cu. Yd. | 18.1 |
| Reinforcement Bars | | | Pound | 2,320 |
| Steel Piles HP10x42 | | | Foot | 510 |
| Concrete Encasement | | | Cu. Yd. | 1.6 |
| Stud Shear Connectors | | | Each | 24 |

## ELEVATIONS

| Location | Pile 7 | Pile 8 | Pile 9 | Pile 10 | Pile 11 | Pile 12 |
|---|---|---|---|---|---|---|
| Top of Pile | 386.32 | 386.66 | 387.00 | 387.34 | 388.68 | 388.02 |
| Bott. of Encasement | 386.32 | 381.66 | 382.00 | 382.34 | 383.68 | 383.02 |

## PILE DATA

Type _____ Steel HP10x42
No. Req'd. _____ 6*
Capacity _____ Drive to Refusal
Estimated Lengths _____ 85 Feet/Pile


HAMPTON, LENZINI & RENWICK, INC.
CIVIL & STRUCTURAL ENGINEERS
3085 STEVENSON DRIVE, SUITE 201
SPRINGFIELD, ILLINOIS 62703
(217) 546-3400
ELGIN • SPRINGFIELD


| PROJECT NUMBER: 03-47-0001-i | DATE: 02/05/07 |
|---|---|
| DESIGNED: S.M.S. | CHECKED: S.W.M. |
| | DRAWN: D.B. |

# EAST ABUTMENT

**SECTION 99-02118-00-FP**

**F.A.U. 9713 / EAST PLEASANT HILL ROAD**

**JACKSON COUNTY**

**STRUCTURE NO. 039-3254 / STATION 80+95**

| ROUTE NO. | SECTION | COUNTY | TOTAL SHEETS | SHEET NO. |
|---|---|---|---|---|
| FAU 9713 | 99-02118 -00-FP | JACKSON | 122 | 60 |
| FED. ROAD DIST. NO. | | ILLINOIS | FED. AID PROJECT- | |

CONTRACT NO. 99219



ILLINOIS DEPARTMENT OF TRANSPORTATION
District Nine Materials
Bridge Foundation Boring Log

F.A.U. 9713 (E.Pleasant Hill Road) Over Drainage Ditch — Sheet 1 of 3

Route: F.A.U. 9713 Structure Number: Date: 11/19/2003
Section 99-02118-00-FP Bored By: Bryan Keller
County: Jackson Location: S W 1/4 SEC 26 R 1 W, T 9 S Checked By: Rob Graeff

Boring No 1-S
Station 81+30
Offset 12' RT CL
Ground Surface 389.0 Ft

Surf Wat Elev: 384.4
Ground Water Elevation
when Drilling 377
At Completion
At: Hrs:

| DEPTH | BLOW | Qu tsf | W% | Description |
|---|---|---|---|---|
| | | | | Crushed Aggregate |
| 387.5 | | | | |
| | 2 | | | Stiff, moist, grey mottled brown, Silty Clay Loam A-6 |
| | 5 | 1.6S | 22 | |
| | 5 | | | |
| 384.5 | | | | |
| 5.0 | 1 | | | Medium, moist to very moist, brown, Silty Clay Loam A-6 |
| | 3 | 0.7S | 25 | |
| | 2 | | | |
| 382.0 | | | | |
| | WH | | | Soft to medium, very moist, brown, Silty Clay Loam A-6 |
| | 1 | 0.5B | 28 | |
| | 1 | | | |
| 379.5 | | | | |
| 10.0 | WH | | | Medium, very moist, brown, Silty Clay Loam A-6 |
| | 2 | 0.7B | 27 | |
| | 2 | | | |
| 377.0 | | | | |
| | WH | | | Soft, very moist, brown, Silty Clay Loam A-6 |
| | 1 | 0.4B | 29 | |
| | 1 | | | |
| 374.5 | | | | |
| 15.0 | WH | | | Very soft, very moist, brown, Silty Clay Loam A-6 |
| | 1 | 0.2B | 31 | |
| | WH | | | |
| 372.0 | | | | |
| | WH | | | Soft, very moist, brown, Silty Clay A-6 |
| | 2 | 0.3B | 29 | |
| | 2 | | | |
| 369.5 | | | | |
| 20.0 | 1 | | | Stiff, very moist, grey, Silty Clay A-6 |
| | 3 | 1.1B | 28 | |
| | 3 | | | |
| 367.0 | | | | |
| | WH | | | Medium to stiff, very moist, grey, Silty Clay Loam A-6 |
| | 1 | 1.0B | 25 | |
| | 1 | | | |
| 364.5 | | | | |
| 25.0 | WH | | | |

| DEPTH | BLOW | Qu tsf | W% | Description |
|---|---|---|---|---|
| | WH | 0.6B | 30 | Medium, very moist, grey, Silty Clay Loam A-6 |
| | 1 | | | |
| 362.0 | | | | |
| | WH | | | Medium, very moist, grey, Silty Clay A-6 |
| | WH | 0.8B | 31 | |
| | 1 | | | |
| 359.5 | | | | |
| 30.0 | WH | | | Medium, very moist, grey, Clay to Silty Clay A7-6 |
| | WH | 0.7B | 32 | |
| | 1 | | | |
| 357.0 | | | | |
| | WH | | | Soft to medium, very moist, grey, Silty Clay A-6 with a Sand Layer |
| | WH | 0.5B | 28 | |
| | WH | | | |
| 354.5 | | | | |
| 35.0 | WH | | | Soft, very moist, grey, Silty Clay Loam A-6 with fine Silty Sand Layers |
| | WH | 0.4B | 27 | |
| | 1 | | | |
| Washed 10' Blow in. 352.0 | | | | |
| | 1 | | | Very loose, wet, fine to medium, Silty Sand with a Clay Layer |
| | 1 | | 22 | 78% Sand |
| | 1 | | | 14% Silt |
| 8% Clay 349.5 | | | | |
| 40.0 | WH | | | Soft, very moist, grey, Silty Clay A-6 |
| | WH | 0.3B | 30 | |
| | WH | | | |
| 344.5 | | | | |
| 45.0 | WH | | | Medium to stiff, very moist, grey, Clay A7-6 with a Sand Layer |
| | 2 | 1.0B | 28 | |
| | 2 | | | |
| 50.0 | WH | | | |

N-Std Pentr Test: 2" OD Sampler,
140# Hammer, 30" Fall (Type Fail. B-Bulge S-Shear E-Estimated P-Penetrometer)



Sheet 2 of 3

Route: F.A.U. 9713
Section: 99-02118-00-FP
County: Jackson
Date: 11/19/2003

Boring No: 1-S
Station: 81+30
Offset: 12' RT CL
Ground Surface: 389.0 Ft

| DEPTH | BLOW | Qu tsf | W% | Description |
|---|---|---|---|---|
| | WH | 1.0B | 28 | |
| | 2 | | | |
| 334.5 | | | | |
| 55.0 | 1 | | | Stiff, very moist, grey, Clay A7-6 |
| | 3 | 1.8S | 33 | |
| | 4 | | | |
| 329.5 | | | | |
| 60.0 | WH | | | Medium, very moist, grey, Clay A7-6 |
| | 1 | 0.8B | 25 | |
| | 2 | | | |
| | | | | Washed 5' Blow in. |
| 319.5 | | | | |
| 70.0 | 1 | | | Loose, moist, grey, coarse, Sand |
| | 3 | | 10 | |
| | 4 | | | |
| 314.5 | | | | |
| 75.0 | 4 | | | |

| DEPTH | BLOW | Qu tsf | W% | Description |
|---|---|---|---|---|
| | 7 | 4.3S | 22 | Hard, moist, brown, Clay A7-6 with some Pea Gravel |
| | 9 | | | |
| 309.5 | | | | |
| 80.0 | 4 | | | Hard, dry, brown mottled grey, Weathered Clay Shale |
| | 30 | | | |
| | 37 | | | |
| 307.0 | | | | |
| | 100/12" | | | Hard, dry, brown mottled grey, Clay Shale |
| 85.0 | | | | |
| Hard, dry, grey, Clay Shale 301.5 | 100/7" | | | |
| Bottom of hole = 87.5 ft. | | | | |
| Free water observed at 12.0 ft. | | | | |
| 90.0 | | | | |
| Elevation referenced to CL at Existing Grade Sta 81+00 Elevation = 389.2 ft. | | | | |
| To convert "N" values to "N60" values multiply by1.25. | | | | |
| 95.0 | | | | |
| 100.0 | | | | |

N-Std Pentr Test: 2" OD Sampler,
140# Hammer, 30" Fall (Type Fail. B-Bulge S-Shear E-Estimated P-Penetrometer)

BORINGS

HAMPTON, LENZINI & RENWICK, INC.
CIVIL & STRUCTURAL ENGINEERS
3085 STEVENSON DRIVE, SUITE 201
SPRINGFIELD, ILLINOIS 62703
(217) 546-3400
ELGIN • SPRINGFIELD

| PROJECT NUMBER: 03-47-0001-i | DATE: 10/03/06 |
|---|---|
| DESIGNED: S.M.S. | CHECKED: S.W.M. | DRAWN: D.B. |

BORING 1
SECTION 99-02118-00-FP
F.A.U. 9713 / EAST PLEASANT HILL ROAD
JACKSON COUNTY
STRUCTURE NO. 039-3254 / STATION 80+95

| ROUTE NO. | SECTION | COUNTY | TOTAL SHEETS | SHEET NO. |
|---|---|---|---|---|
| FAU 9713 | 99-02118 -00-FP | JACKSON | 122 | 61 |
| FED. ROAD DIST. NO. | | ILLINOIS | FED. AID PROJECT- | |

CONTRACT NO. 99219



ILLINOIS DEPARTMENT OF TRANSPORTATION
District Nine Materials

Bridge Foundation Boring Log

F.A.U. 9713 (E.Pleasant Hill Road) Over Drainage Ditch — Sheet 1 of 2

Route: F.A.U. 9713 — Structure Number: — Date: 11/21/2003
Section 99-02118-00-FP — Bored By: Bryan Keller
County: Jackson — Location: S W 1/4 SEC#26 R 1 W, T 9 S — Checked By: Rob Graeff

Boring No 2-S
Station 80+70
Offset 12' LT CL
Ground Surface 389.0 Ft

Surf Wat Elev: 384.4
Ground Water Elevation
when Drilling 369.5
At Completion
At: Hrs:

| DEPTH | BLOW | Qu tsf | W% | DEPTH | BLOW | Qu tsf | W% |
|---|---|---|---|---|---|---|---|
| Crushed Aggregate | | | | | 1 | 0.7B | 38 |
| 387.5 | | | | | 2 | | |
| Stiff, moist, grey, Silty Clay Loam A-6 with some Gravel | 4 | | | | WH | | |
| | 8 | 2.2S | 21 | | WH | 0.6B | 31 |
| | 9 | | | | WH | | |
| 384.5 | | | | | | | |
| Soft to medium, very moist, grey, Silty Clay A-6 5.0 | 1 | | | 30.0 | WH | | |
| | 1 | 0.5B | 33 | | WH | 0.7B | 35 |
| | 1 | | | | 1 | | |
| 382.0 | | | | 357.0 | | | |
| Stiff, very moist, grey, Silty Clay Loam A-6 | WH | | | Soft, very moist, grey, Silty Clay Loam A-6 with Sand Layers | WH | | |
| | 2 | 1.2S | 25 | | WH | 0.4B | 34 |
| | 2 | | | | 1 | | |
| 379.5 | | | | | | | |
| Stiff, moist to very moist, brown mottled grey, Silty Clay A7-6 10.0 | WH | | | 35.0 | WH | | |
| | 2 | 1.5B | 25 | | WH | 0.4B | 35 |
| | 2 | | | | 2 | | |
| | 1 | | | | WH | | |
| | 3 | 1.7S | 25 | | 1 | 0.3B | 33 |
| | 4 | | | | 2 | | |
| | | | | 349.5 | | | |
| 15.0 | 1 | | | Medium, very moist, grey, Silty Clay A7-6 40.0 | WH | | |
| | 3 | 1.6B | 26 | | WH | 0.7B | 30 |
| | 4 | | | | WH | | |
| | 1 | | | | | | |
| | 4 | 1.7B | 27 | | | | |
| | 3 | | | | | | |
| 369.5 | | | | | | | |
| Very stiff, moist, grey mottled brown, Silty Clay Loam A-6 20.0 | 1 | | | 45.0 | WH | | |
| | 3 | 2.6S | 23 | | 1 | 0.6S | 25 |
| | 5 | | | | 2 | | |
| 367.0 | | | | | | | |
| Medium, very moist, grey, Clay A7-6 | WH | | | | | | |
| | WH | 0.8B | 32 | | | | |
| | 2 | | | | | | |
| 339.5 | | | | | | | |
| 25.0 | WH | | | 50.0 | WH | | |

N-Std Pentr Test: 2" OD Sampler,
140# Hammer, 30" Fall (Type Fail. B-Bulge S-Shear E-Estimated P-Penetrometer)



Sheet 2 of 2

Route: F.A.U. 9713 — Date: 11/21/2003
Section: 99-02118-00-FP
County: Jackson

Boring No: 2-S
Station: 80+70
Offset: 12' LT CL
Ground Surface: 389.0 Ft

| DEPTH | BLOW | Qu tsf | W% | | DEPTH | BLOW | Qu tsf | W% |
|---|---|---|---|---|---|---|---|---|
| Loose, wet, grey, very fine, Silty Sand 79% Sand 15% Silt 6% Clay Washed 10' Blow in. | 3 | | 22 | Medium, wet, brown, Sandy Gravel with Clay Layers 52% Sand 19% Silt 14% Clay 15% Gravel | | 10 | | 22 |
| | 6 | | | | | 17 | | |
| 334.5 | | | | 309.5 | | | | |
| Soft to medium, moist, grey, Clay A7-6 with Sand Layers 55.0 | WH | | | Hard, dry, grey, Clay Shale 80.0 | | 100/11" | | |
| | 3 | 0.5B | 18 | 308.5 | | | | |
| | 4 | | | Bottom of hole = 80.5 ft. | | | | |
| | | | | Free water observed at 19.5 ft. | | | | |
| | | | | Elevation referenced to CL of Existing Pavement at Sta 81+00 = 389.2 ft | | | | |
| 329.5 | | | | | | | | |
| Hard, moist, brown, Clay A7-6 60.0 | 9 | | | To convert "N" values to "N60" values multiply by 1.25. 85.0 | | | | |
| | 12 | 5.2S | 25 | | | | | |
| | 14 | | | | | | | |
| 324.5 | | | | | | | | |
| Very stiff, moist, brown, Clay A7-6 65.0 | 2 | | | | | 90.0 | | |
| | 6 | 3.1S | 28 | | | | | |
| | 8 | | | | | | | |
| 319.5 | | | | | | | | |
| Medium, very moist, brown, Clay A7-6 with Gravel Layers 70.0 | 5 | | | | | 95.0 | | |
| | 10 | 0.7B | 21 | | | | | |
| | 8 | | | | | | | |
| 314.5 | | | | | | | | |
| 75.0 | 3 | | | | | 100.0 | | |

N-Std Pentr Test: 2" OD Sampler,
140# Hammer, 30" Fall (Type Fail. B-Bulge S-Shear E-Estimated P-Penetrometer)

BORINGS

HAMPTON, LENZINI & RENWICK, INC.
CIVIL & STRUCTURAL ENGINEERS
3085 STEVENSON DRIVE, SUITE 201
SPRINGFIELD, ILLINOIS 62703
(217) 546-3400
ELGIN • SPRINGFIELD

| PROJECT NUMBER: 03-47-0001-i | | DATE: 10/03/06 |
|---|---|---|
| DESIGNED: S.M.S. | CHECKED: S.W.M. | DRAWN: D.B. |

BORING 2
SECTION 99-02118-00-FP
F.A.U. 9713 / EAST PLEASANT HILL ROAD
JACKSON COUNTY
STRUCTURE NO. 039-3254 / STATION 80+95

| FAU | SECTION | COUNTY | TOTAL SHEETS | SHEET NO. |
|---|---|---|---|---|
| 9713 | 99-02118-00-FP | JACKSON | 122 | 62 |
| STA. | | TO STA. | | |
| FED. ROAD DIST. NO. | ILLINOIS | CONTRACT NO. 99219 | | |

| FINAL SURVEY NOTE BOOK NO. | ORIGINAL SURVEY NOTE BOOK NO. | BY | DATE |
|---|---|---|---|
| SURVEYED | SURVEYED | | |
| PLOTTED | PLOTTED | | |
| TEMPLATE | TEMPLATE | | |
| AREAS | AREAS | | |
| AREAS CHECKED | AREAS CHECKED | | |

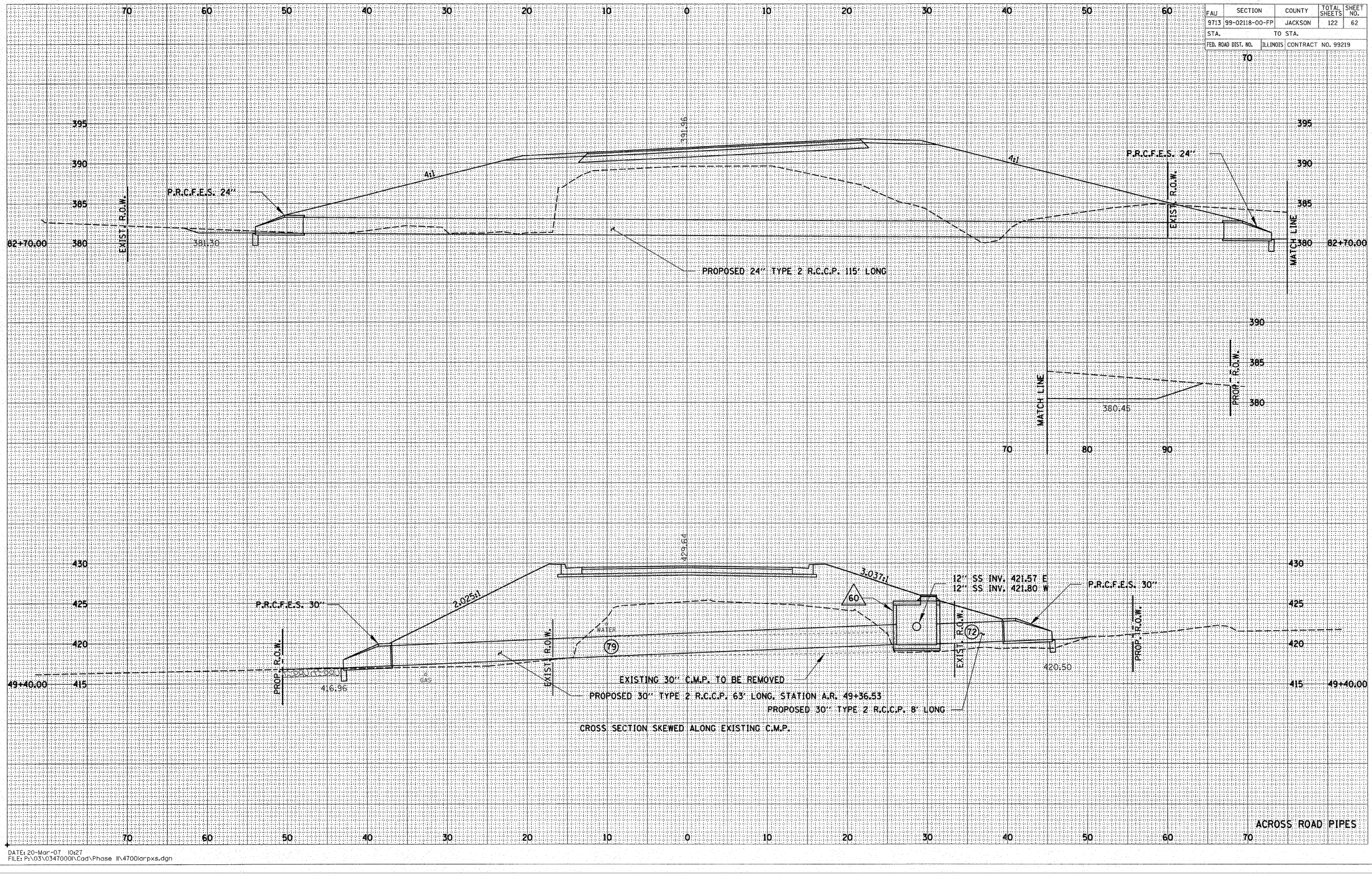


DATE: 20-Mar-07 10:27
FILE: P:\03\0347000\Cad\Phase II\4700larpxs.dgn

| FAU | SECTION | COUNTY | TOTAL SHEETS | SHEET NO. |
|---|---|---|---|---|
| 9713 | 99-02118-00-FP | JACKSON | 122 | 63 |
| STA. | TO STA. | | | |
| FED. ROAD DIST. NO. | ILLINOIS | CONTRACT NO. 99219 | | |

| FINAL SURVEY | NOTE BOOK | NO. |
|---|---|---|
| | SURVEYED | BY |
| | PLOTTED | |
| | TRAPEZITE | DATE |
| | AREAS | |
| | AREAS CHECKED | |

| ORIGINAL SURVEY | NOTE BOOK | NO. |
|---|---|---|
| | SURVEYED | BY |
| | PLOTTED | |
| | TRAPEZITE | DATE |
| | AREAS | |
| | AREAS CHECKED | |

DATE: 20-Mar-07 10:30
FILE: P:\03\0347000\Cad\Phase II\4700lxs.dgn

| FAU | SECTION | COUNTY | TOTAL SHEETS | SHEET NO. |
|---|---|---|---|---|
| 9713 | 99-02118-00-FP | JACKSON | 122 | 64 |
| STA. | | TO STA. | | |
| FED. ROAD DIST. NO. | ILLINOIS | CONTRACT NO. 99219 | | |

| FINAL SURVEY | SURVEYED | BY | DATE |
|---|---|---|---|
| | PLOTTED | | |
| NOTE BOOK | TEMPLATE | | |
| NO. | AREAS | | |
| | AREAS CHECKED | | |

| ORIGINAL SURVEY | SURVEYED | BY | DATE |
|---|---|---|---|
| | PLOTTED | | |
| NOTE BOOK | TEMPLATE | | |
| NO. | AREAS | | |
| | AREAS CHECKED | | |

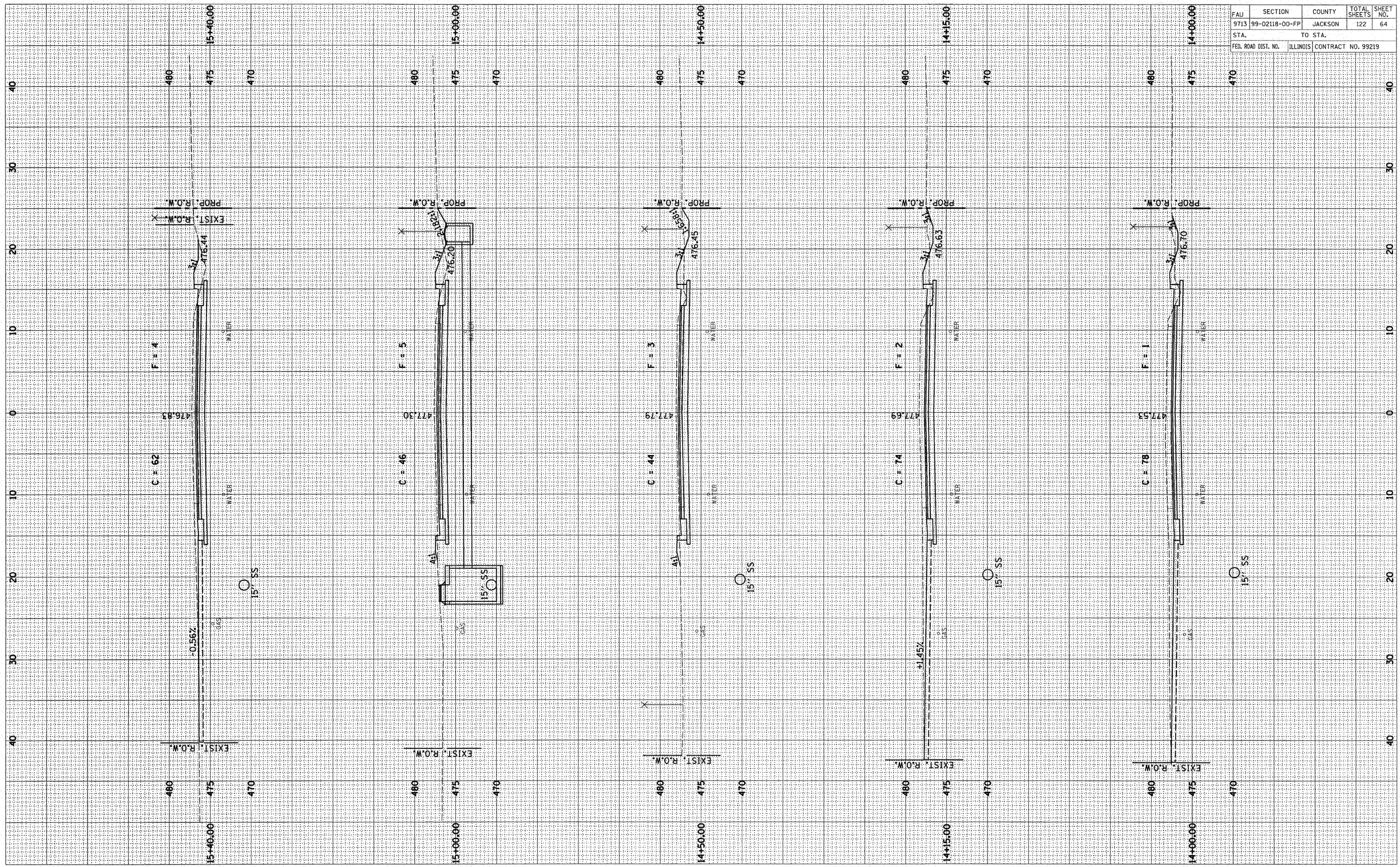


DATE: 20-Mar-07 10:30
FILE: P:\03\0347000I\Cad\Phase II\4700lxs.dgn

| FAU | SECTION | COUNTY | TOTAL SHEETS | SHEET NO. |
|---|---|---|---|---|
| 9713 | 99-02118-00-FP | JACKSON | 122 | 65 |
| STA. | | TO STA. | | |
| FED. ROAD DIST. NO. | ILLINOIS | CONTRACT NO. 99219 | | |

| FINAL SURVEY | BY | DATE |
|---|---|---|
| NOTE BOOK | SURVEYED | |
| NO. | PLOTTED | |
| | TEMPLATE | |
| | AREAS | |
| | AREAS CHECKED | |

| ORIGINAL SURVEY | BY | DATE |
|---|---|---|
| NOTE BOOK | SURVEYED | |
| NO. | PLOTTED | |
| | TEMPLATE | |
| | AREAS | |
| | AREAS CHECKED | |

DATE: 20-Mar-07 10:30
FILE: P:\03\0347000\Cad\Phase II\4700lxs.dgn

| FAU | SECTION | COUNTY | TOTAL SHEETS | SHEET NO. |
|---|---|---|---|---|
| 9713 | 99-02118-00-FP | JACKSON | 122 | 66 |
| STA. | | TO STA. | | |
| FED. ROAD DIST. NO. | | ILLINOIS | CONTRACT NO. 99219 | |

| FINAL SURVEY | NOTE BOOK | NO. |
|---|---|---|
| | SURVEYED | BY |
| | PLOTTED | DATE |
| | TEMPLATE | |
| | AREAS | |
| | AREAS CHECKED | |

| ORIGINAL SURVEY | NOTE BOOK | NO. |
|---|---|---|
| | SURVEYED | BY |
| | PLOTTED | DATE |
| | TEMPLATE | |
| | AREAS | |
| | AREAS CHECKED | |

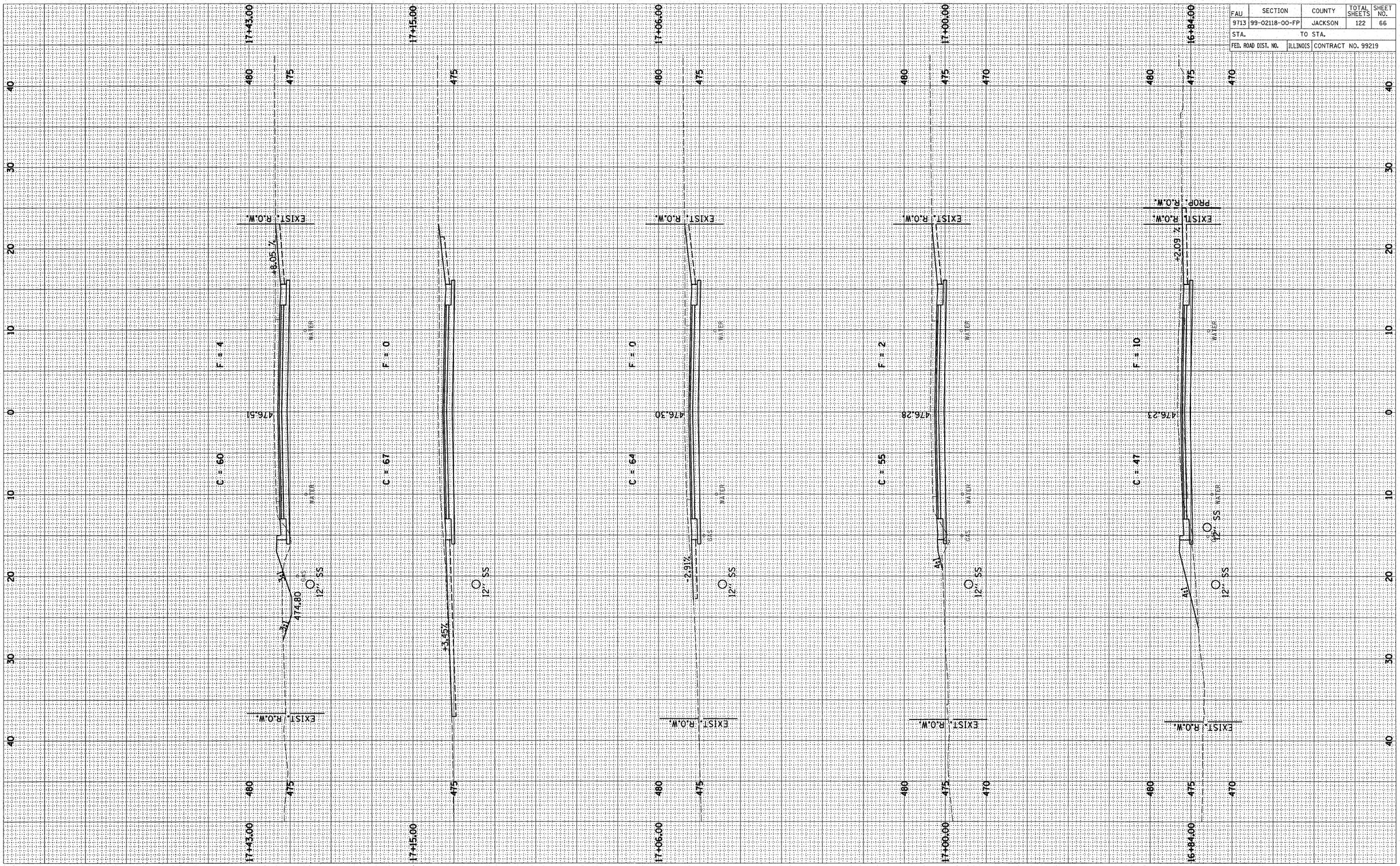


DATE: 20-Mar-07 10:30
FILE: P:\03\0347000I\Cad\Phase II\4700lxs.dgn

| FAU | SECTION | COUNTY | TOTAL SHEETS | SHEET NO. |
|---|---|---|---|---|
| 9713 | 99-02118-00-FP | JACKSON | 122 | 67 |
| STA. | TO STA. | | | |
| FED. ROAD DIST. NO. | ILLINOIS | CONTRACT NO. 99219 | | |

| ORIGINAL SURVEY | BY | DATE |
|---|---|---|
| NOTE BOOK | SURVEYED | |
| NO. | PLOTTED | |
| | TEMPLATE | |
| | AREAS | |
| | AREAS CHECKED | |

| FINAL SURVEY | BY | DATE |
|---|---|---|
| NOTE BOOK | SURVEYED | |
| NO. | PLOTTED | |
| | TEMPLATE | |
| | AREAS | |
| | AREAS CHECKED | |

DATE: 20-Mar-07 10:30
FILE: P:\03\0347000\Cad\Phase II\4700lxs.dgn

| FAU | SECTION | COUNTY | TOTAL SHEETS | SHEET NO. |
|---|---|---|---|---|
| 9713 | 99-02118-00-FP | JACKSON | 122 | 68 |
| STA. | TO STA. | | | |
| FED. ROAD DIST. NO. | ILLINOIS | CONTRACT NO. 99219 | | |

| FINAL SURVEY | BY | DATE |
|---|---|---|
| NOTE BOOK | SURVEYED | |
| NO. | PLOTTED | |
| | TEMPLATE | |
| | AREAS | |
| | AREAS CHECKED | |

| ORIGINAL SURVEY | BY | DATE |
|---|---|---|
| NOTE BOOK | SURVEYED | |
| NO. | PLOTTED | |
| | TEMPLATE | |
| | AREAS | |
| | AREAS CHECKED | |

DATE: 20-Mar-07 10:30
FILE: P:\03\0347000\Cad\Phase II\4700lxs.dgn

| FAU | SECTION | COUNTY | TOTAL SHEETS | SHEET NO. |
|---|---|---|---|---|
| 9713 | 99-02118-00-FP | JACKSON | 122 | 69 |
| STA. | | TO STA. | | |
| FED. ROAD DIST. NO. | ILLINOIS | CONTRACT NO. 99219 | | |

FINAL SURVEY
NOTE BOOK
NO.

SURVEYED
PLOTTED
TEMPLATE
AREAS
AREAS CHECKED

BY

DATE

ORIGINAL SURVEY
NOTE BOOK
NO.

SURVEYED
PLOTTED
TEMPLATE
AREAS
AREAS CHECKED

BY

DATE

DATE: 20-Mar-07 10:30
FILE: P:\03\0347000I\Cad\Phase II\4700lxs.dgn

| FAU | SECTION | COUNTY | TOTAL SHEETS | SHEET NO. |
|---|---|---|---|---|
| 9713 | 99-02118-00-FP | JACKSON | 122 | 70 |
| STA. | TO STA. | | | |
| FED. ROAD DIST. NO. | ILLINOIS | CONTRACT NO. 99219 | | |

FINAL SURVEY
NOTE BOOK
NO.

SURVEYED BY
PLOTTED DATE
TEMPLATE
AREAS
AREAS CHECKED

ORIGINAL SURVEY
NOTE BOOK
NO.

SURVEYED BY
PLOTTED DATE
TEMPLATE
AREAS
AREAS CHECKED




DATE: 20-Mar-07 10:30
FILE: P:\03\0347000I\Cad\Phase II\4700Ixs.dgn

| ORIGINAL SURVEY | | BY | DATE |
|---|---|---|---|
| NOTE BOOK | SURVEYED | | |
| | PLOTTED | | |
| | TEMPLATE | | |
| | AREAS | | |
| NO. | AREAS CHECKED | | |

| FINAL SURVEY | | BY | DATE |
|---|---|---|---|
| NOTE BOOK | SURVEYED | | |
| | PLOTTED | | |
| | TEMPLATE | | |
| | AREAS | | |
| NO. | AREAS CHECKED | | |

DATE: 20-Mar-07 10:30
FILE: P:\03\0347000\Cad\Phase II\4700lxs.dgn

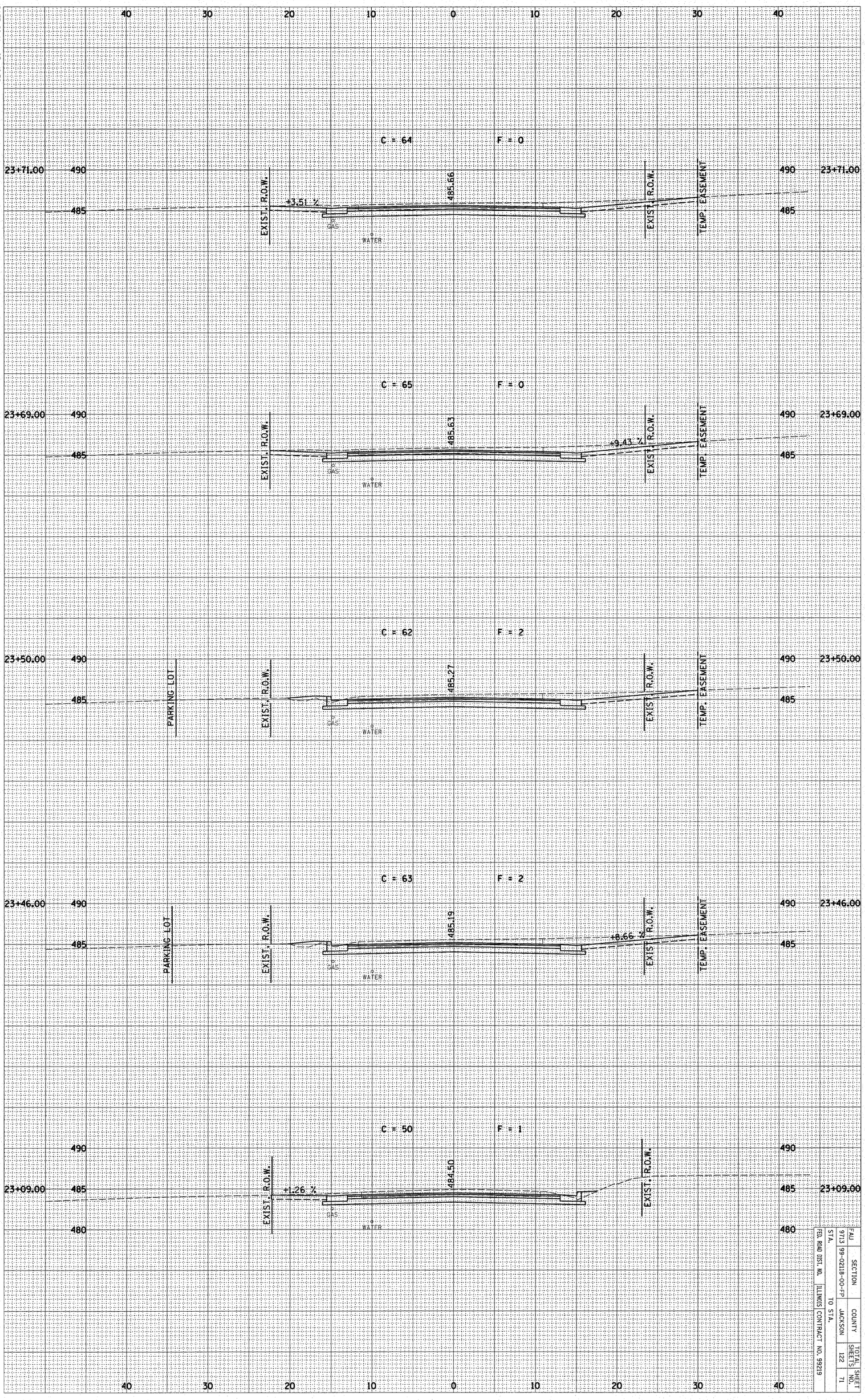


| FAU | SECTION | COUNTY | TOTAL SHEETS | SHEET NO. |
|---|---|---|---|---|
| 9713 | 99-02118-00-FP | JACKSON | 122 | 71 |
| STA. | | TO STA. | | |
| FED. ROAD DIST. NO. | ILLINOIS | CONTRACT NO. 99219 | | |

| FAU | SECTION | COUNTY | TOTAL SHEETS | SHEET NO. |
|---|---|---|---|---|
| 9713 | 99-02118-00-FP | JACKSON | 122 | 72 |
| STA. | | TO STA. | | |
| FED. ROAD DIST. NO. | ILLINOIS | CONTRACT NO. 99219 | | |

| FINAL SURVEY | NOTE BOOK | NO. |
|---|---|---|
| SURVEYED | BY | DATE |
| PLOTTED | | |
| TEMPLATE | | |
| AREAS | | |
| AREAS CHECKED | | |

| ORIGINAL SURVEY | NOTE BOOK | NO. |
|---|---|---|
| SURVEYED | BY | DATE |
| PLOTTED | | |
| TEMPLATE | | |
| AREAS | | |
| AREAS CHECKED | | |

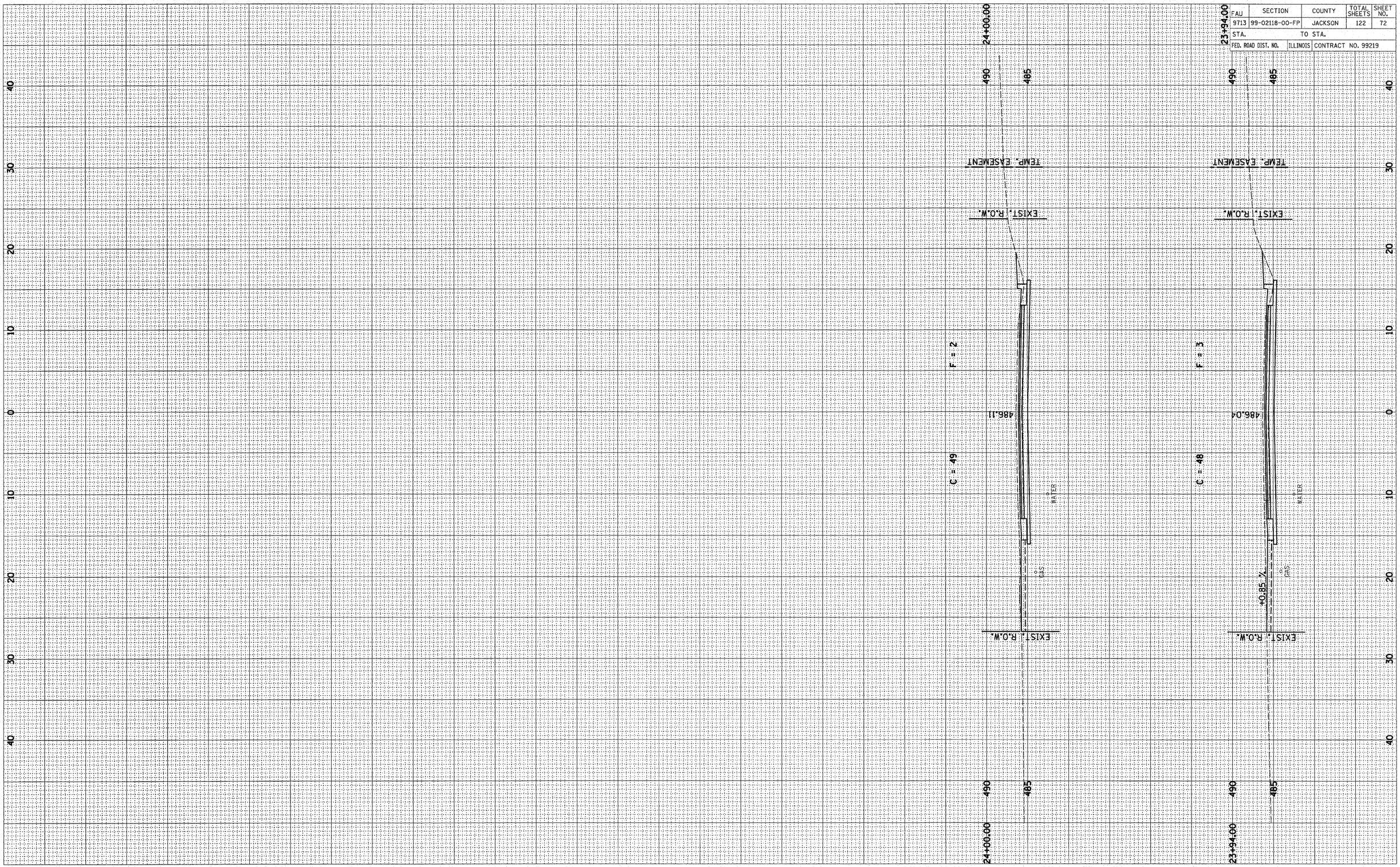


DATE: 20-Mar-07 10:30
FILE: P:\03\0347000I\Cad\Phase II\4700Ixs.dgn

| FAU | SECTION | COUNTY | TOTAL SHEETS | SHEET NO. |
|---|---|---|---|---|
| 9713 | 99-02118-00-FP | JACKSON | 122 | 73 |
| STA. | | TO STA. | | |
| FED. ROAD DIST. NO. | ILLINOIS | CONTRACT NO. 99219 | | |

| FINAL SURVEY | NOTE BOOK | SURVEYED | PLOTTED | TEMPLATE | AREAS CHECKED | BY | DATE |
|---|---|---|---|---|---|---|---|
| NO. | | | | | | | |

| ORIGINAL SURVEY | NOTE BOOK | SURVEYED | PLOTTED | TEMPLATE | AREAS CHECKED | BY | DATE |
|---|---|---|---|---|---|---|---|
| NO. | | | | | | | |

70 60 50 40 30 20 10 0 10 20 30 40 50 60 70

C = 13 F = 18

25+00.00 490 485 480

EXIST. R.O.W. 485.68 EXIST. R.O.W. TEMP. EASEMENT

GAS WATER

C = 17 F = 16

490 485 24+96.00

EXIST. R.O.W. 485.75 -3.76 % EXIST. R.O.W. TEMP. EASEMENT

GAS WATER

C = 56 F = 2

495 490 24+70.00 485

EXIST. R.O.W. 4:1 486.13 +10.41 % EXIST. R.O.W. TEMP. EASEMENT

GAS WATER

C = 47 F = 2

495 490 24+50.00 485

EXIST. R.O.W. 4:1 486.28 EXIST. R.O.W. TEMP. EASEMENT

GAS WATER

70 60 50 40 30 20 10 0 10 20 30 40 50 60 70

DATE: 20-Mar-07 10:30
FILE: P:\03\0347000\Cad\Phase II\4700lxs.dgn

| FAU | SECTION | COUNTY | TOTAL SHEETS | SHEET NO. |
|---|---|---|---|---|
| 9713 | 99-02118-00-FP | JACKSON | 122 | 74 |
| STA. | | TO STA. | | |
| FED. ROAD DIST. NO. | ILLINOIS | CONTRACT NO. 99219 | | |

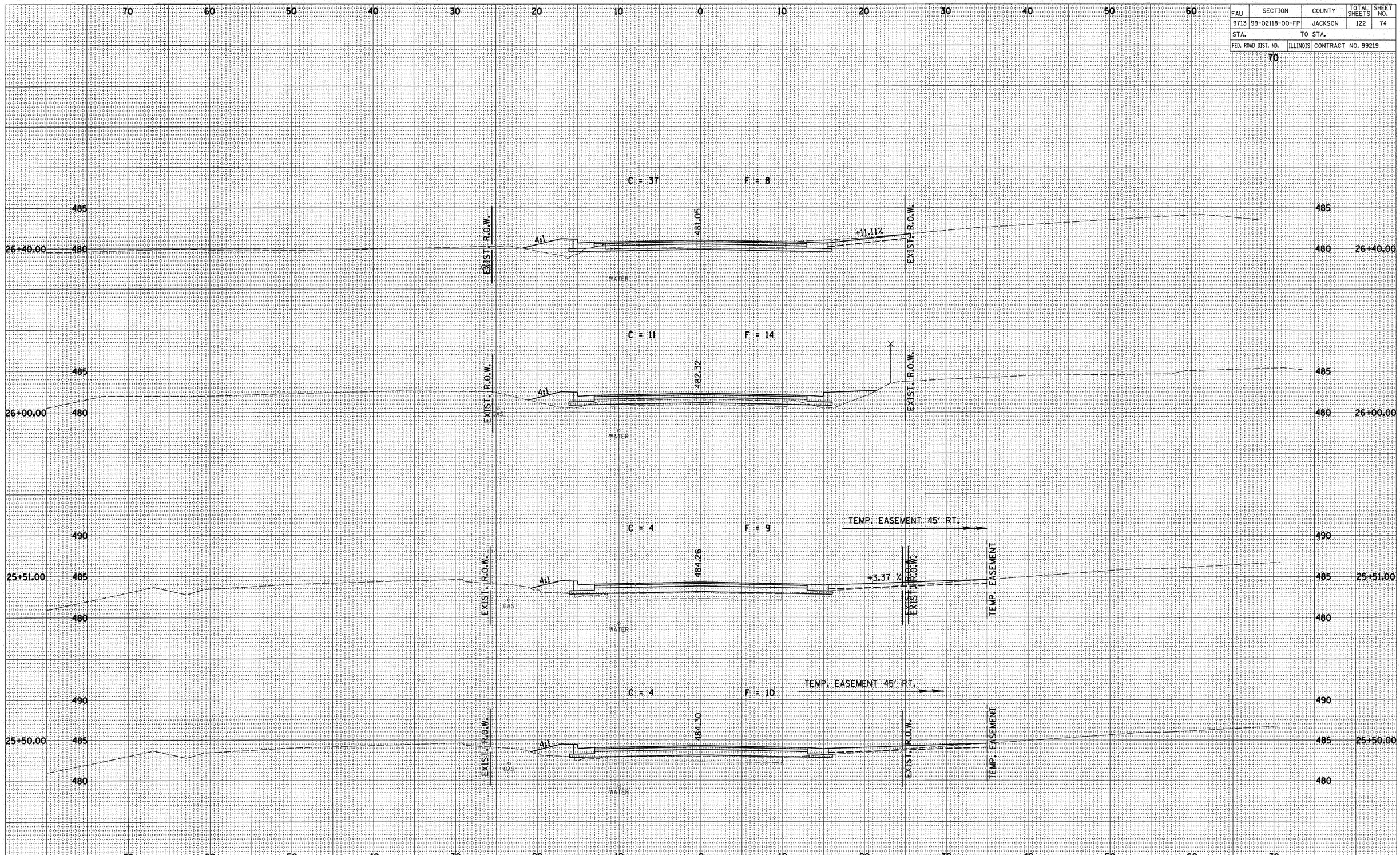


FINAL SURVEY | NOTE BOOK NO. | SURVEYED | PLOTTED | TEMPLATE | AREAS | AREAS CHECKED | BY | DATE

ORIGINAL SURVEY | NOTE BOOK NO. | SURVEYED | PLOTTED | TEMPLATE | AREAS | AREAS CHECKED | BY | DATE

DATE: 20-Mar-07 10:30
FILE: P:\03\0347000I\Cad\Phase II\4700Ixs.dgn

| FAU | SECTION | COUNTY | TOTAL SHEETS | SHEET NO. |
|---|---|---|---|---|
| 9713 | 99-02118-00-FP | JACKSON | 122 | 75 |
| STA. | TO STA. | | | |
| FED. ROAD DIST. NO. | ILLINOIS | CONTRACT NO. 99219 | | |

| FINAL SURVEY | BY | DATE |
|---|---|---|
| NOTE BOOK | SURVEYED | |
| NO. | PLOTTED | |
| | TEMPLATE | |
| | AREAS | |
| | AREAS CHECKED | |

| ORIGINAL SURVEY | BY | DATE |
|---|---|---|
| NOTE BOOK | SURVEYED | |
| NO. | PLOTTED | |
| | TEMPLATE | |
| | AREAS | |
| | AREAS CHECKED | |

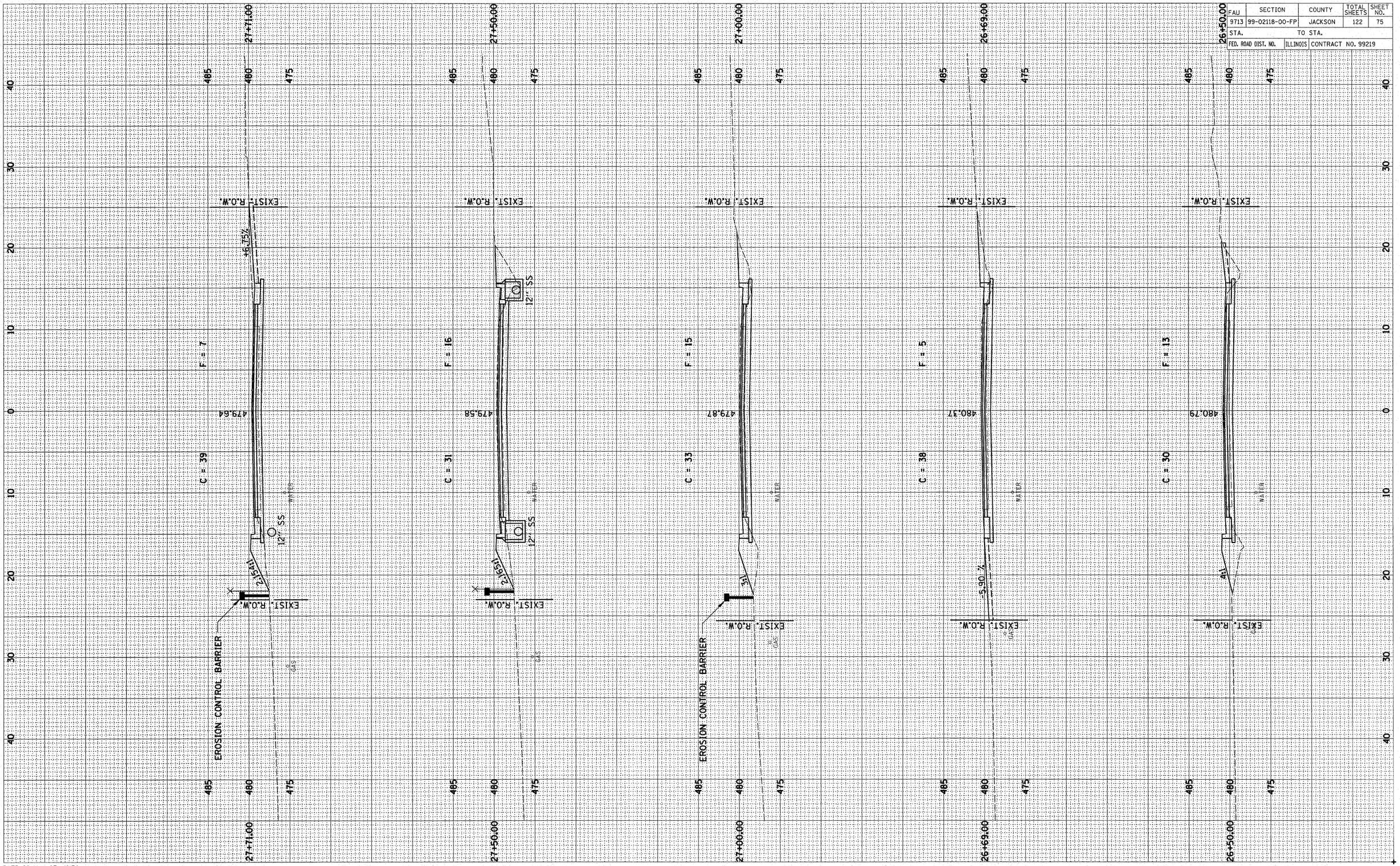


DATE: 20-Mar-07 10:30
FILE: P:\03\0347000\Cad\Phase II\4700lxs.dgn

| FAU | SECTION | COUNTY | TOTAL SHEETS | SHEET NO. |
|---|---|---|---|---|
| 9713 | 99-02118-00-FP | JACKSON | 122 | 76 |
| STA. | TO STA. | | | |
| FED. ROAD DIST. NO. | ILLINOIS | CONTRACT NO. 99219 | | |

| FINAL SURVEY | NOTE BOOK | NO. |
|---|---|---|
| | SURVEYED | BY |
| | PLOTTED | DATE |
| | TEMPLATE | |
| | AREAS | |
| | AREAS CHECKED | |

| ORIGINAL SURVEY | NOTE BOOK | NO. |
|---|---|---|
| | SURVEYED | BY |
| | PLOTTED | DATE |
| | TEMPLATE | |
| | AREAS | |
| | AREAS CHECKED | |

28+00.00 | 28+50.00 | 29+00.00 | 29+19.00 | 29+24.00 | 29+50.00

EXIST. R.O.W.

WATER

GAS

EROSION CONTROL BARRIER

F = 3 | C = 33 | 479.56

F = 0 | C = 41 | 479.90 | -2.82 %

F = 0 | C = 41 | 479.95 | -0.64%

F = 6 | C = 21 | 480.10 | +0.21%

F = 19 | C = 7 | 480.13 | 2.6:1

F = 16 | C = 16 | 479.82 | 2:1

485 | 480 | 475 | 40 | 30 | 20 | 10 | 0

DATE: 20-Mar-07 10:30
FILE: P:\03\0347000I\Cad\Phase II\4700Ixs.dgn

| FAU | SECTION | COUNTY | TOTAL SHEETS | SHEET NO. |
|---|---|---|---|---|
| 9713 | 99-02118-00-FP | JACKSON | 122 | 77 |
| STA. | | TO STA. | | |
| FED. ROAD DIST. NO. | ILLINOIS | CONTRACT NO. 99219 | | |

| FINAL SURVEY | NOTE BOOK | NO. |
|---|---|---|
| SURVEYED | | BY |
| PLOTTED | | DATE |
| TEMPLATE | | |
| AREAS | | |
| AREAS CHECKED | | |

| ORIGINAL SURVEY | NOTE BOOK | NO. |
|---|---|---|
| SURVEYED | | BY |
| PLOTTED | | DATE |
| TEMPLATE | | |
| AREAS | | |
| AREAS CHECKED | | |

DATE: 20-Mar-07 10:30
FILE: P:\03\0347000I\Cad\Phase II\4700Ixs.dgn

| FAU | SECTION | COUNTY | TOTAL SHEETS | SHEET NO. |
|---|---|---|---|---|
| 9713 | 99-02118-00-FP | JACKSON | 122 | 78 |
| STA. | TO STA. | | | |
| FED. ROAD DIST. NO. | ILLINOIS | CONTRACT NO. 99219 | | |

FINAL SURVEY
NOTE BOOK
NO.
SURVEYED
PLOTTED
TEMPLATE
AREAS
AREAS CHECKED
BY
DATE

ORIGINAL SURVEY
NOTE BOOK
NO.
SURVEYED
PLOTTED
TEMPLATE
AREAS
AREAS CHECKED
BY
DATE

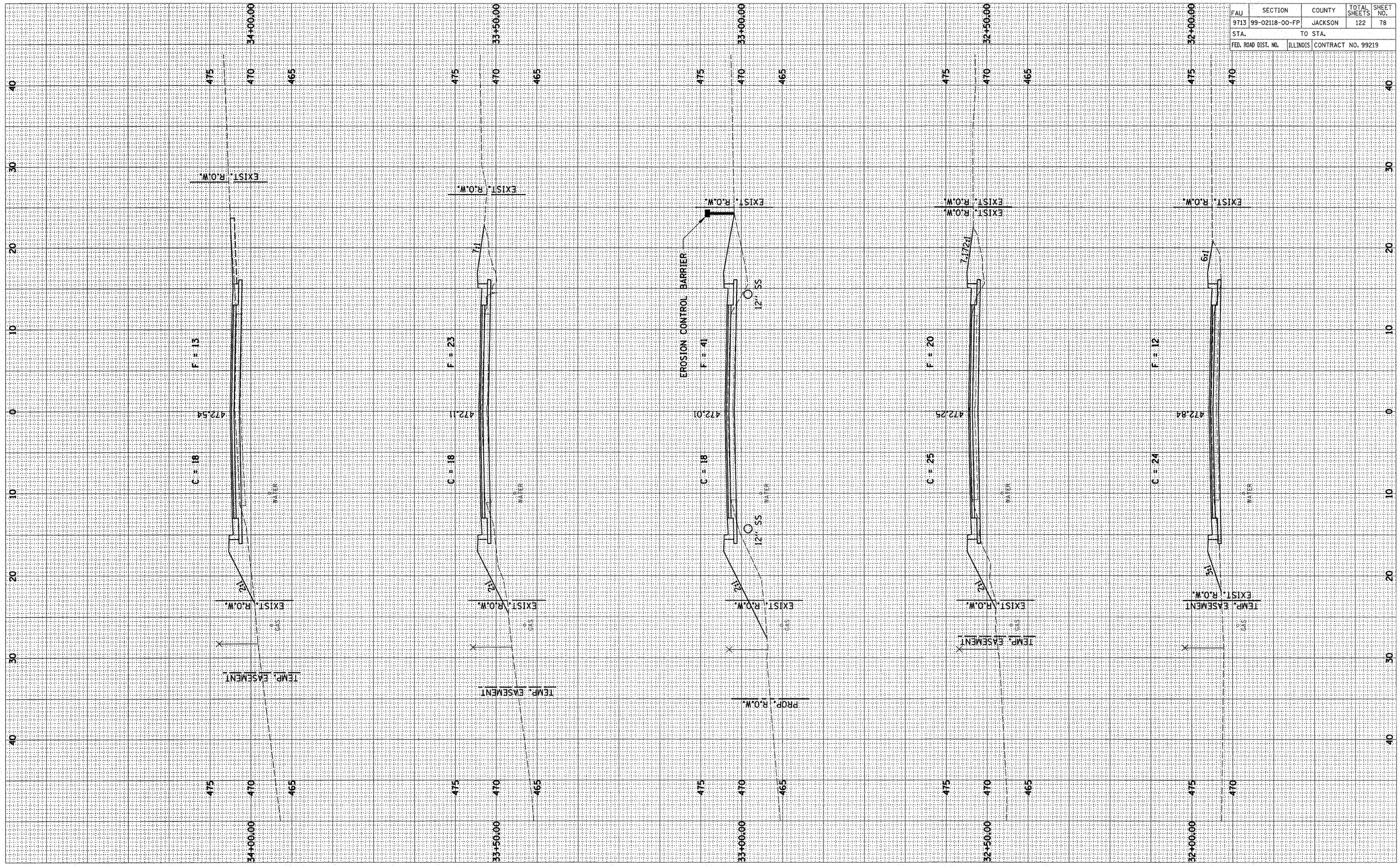


DATE: 20-Mar-07 10:30
FILE: P:\03\0347000I\Cad\Phase II\4700Ixs.dgn

| FAU | SECTION | COUNTY | TOTAL SHEETS | SHEET NO. |
|---|---|---|---|---|
| 9713 | 99-02118-00-FP | JACKSON | 122 | 79 |
| STA. | TO STA. | | | |
| FED. ROAD DIST. NO. | ILLINOIS | CONTRACT NO. 99219 | | |

| FINAL SURVEY | NOTE BOOK | NO. |
|---|---|---|
| SURVEYED | BY | DATE |
| PLOTTED | | |
| TEMPLATE | | |
| AREAS | | |
| AREAS CHECKED | | |

| ORIGINAL SURVEY | NOTE BOOK | NO. |
|---|---|---|
| SURVEYED | BY | DATE |
| PLOTTED | | |
| TEMPLATE | | |
| AREAS | | |
| AREAS CHECKED | | |




DATE: 20-Mar-07 10:30
FILE: P:\03\0347000I\Cad\Phase II\4700Ixs.dgn

| FAU | SECTION | COUNTY | TOTAL SHEETS | SHEET NO. |
|---|---|---|---|---|
| 9713 | 99-02118-00-FP | JACKSON | 122 | 80 |
| STA. | | TO STA. | | |
| FED. ROAD DIST. NO. | ILLINOIS | CONTRACT NO. 99219 | | |

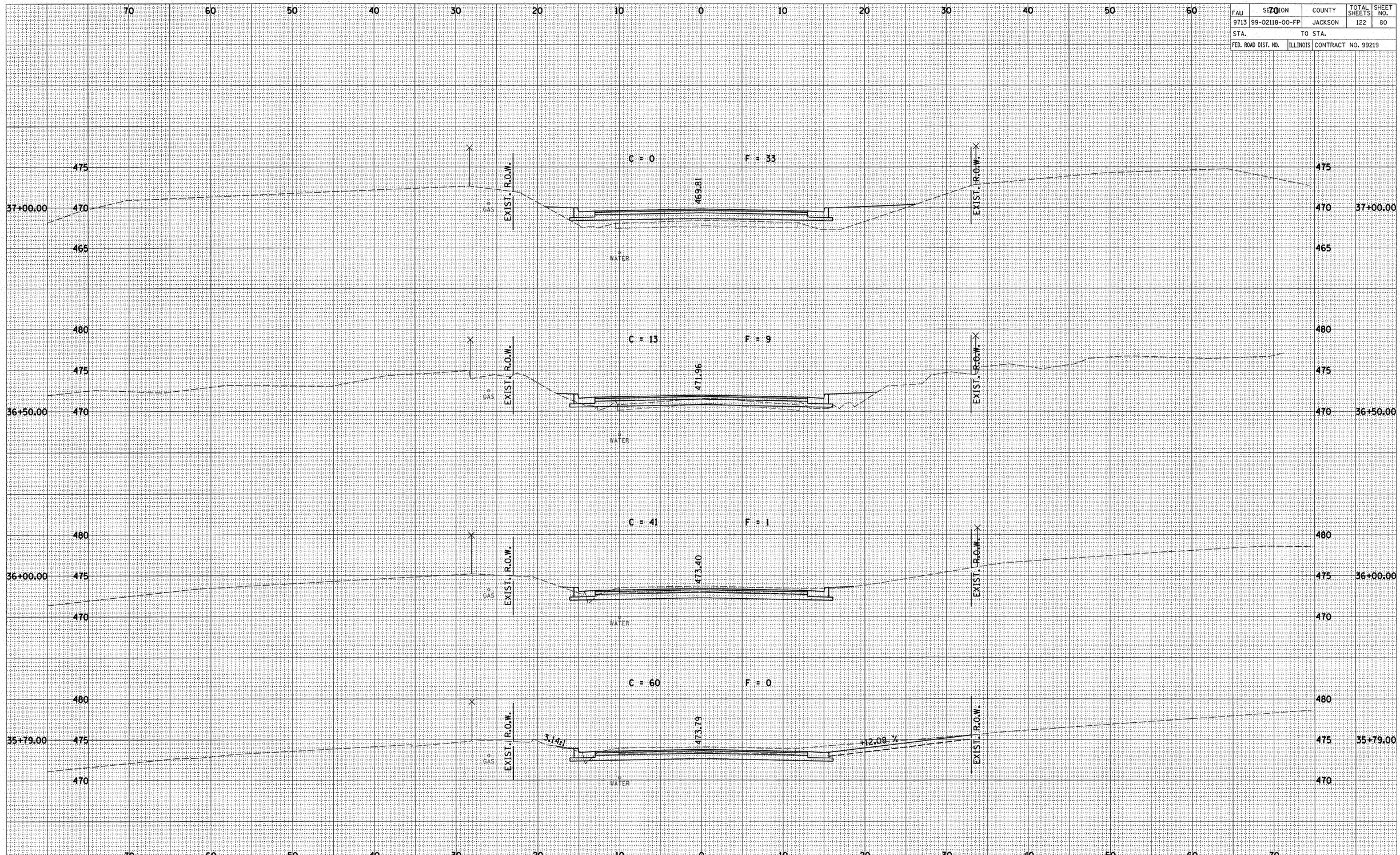


FINAL SURVEY
NOTE BOOK NO.
SURVEYED
PLOTTED
TEMPLATE
AREAS
AREAS CHECKED
BY
DATE

ORIGINAL SURVEY
NOTE BOOK NO.
SURVEYED
PLOTTED
TEMPLATE
AREAS
AREAS CHECKED
BY
DATE

DATE: 20-Mar-07 10:30
FILE: P:\03\03470001\Cad\Phase II\47001xs.dgn

| FAU | SECTION | COUNTY | TOTAL SHEETS | SHEET NO. |
|---|---|---|---|---|
| 9713 | 99-02118-00-FP | JACKSON | 122 | 81 |
| STA. | TO STA. | | | |
| FED. ROAD DIST. NO. | ILLINOIS | CONTRACT NO. 99219 | | |

| FINAL SURVEY | NOTE BOOK | NO. |
|---|---|---|
| SURVEYED | | |
| PLOTTED | | |
| TEMPLATE | | |
| AREAS | | |
| AREAS CHECKED | | |

| ORIGINAL SURVEY | NOTE BOOK | NO. |
|---|---|---|
| SURVEYED | | |
| PLOTTED | | |
| TEMPLATE | | |
| AREAS | | |
| AREAS CHECKED | | |

| BY | DATE |
|---|---|
| | |

70 60 50 40 30 20 10 0 10 20 30 40 50 60 70

470 465 460 455

38+29.00

TEMP. EASEMENT
EXIST. R.O.W.
2:1
C = 2
466.01
F = 150
WATER
-1.88 %
462.04
15" CMP
EXIST. R.O.W.
TEMP. EASEMENT

38+00.00

TEMP. EASEMENT
EXIST. R.O.W.
2:1
C = 3
466.50
F = 140
WATER
3:1
462.50
EXIST. R.O.W.
TEMP. EASEMENT

37+50.00

TEMP. EASEMENT
EXIST. R.O.W.
3:1
C = 3
467.85
F = 64
WATER
EXIST. R.O.W.
TEMP. EASEMENT

37+44.00

EXIST. R.O.W.
4:1
C = 2
468.05
F = 59
WATER
-0.52 %
EXIST. R.O.W.
TEMP. EASEMENT

DATE: 20-Mar-07 10:30
FILE: P:\03\0347000l\Cad\Phase II\4700lxs.dgn

| FAU | SECTION | COUNTY | TOTAL SHEETS | SHEET NO. |
|---|---|---|---|---|
| 9713 | 99-02118-00-FP | JACKSON | 122 | 82 |
| STA. | | TO STA. | | |
| FED. ROAD DIST. NO. | ILLINOIS | CONTRACT NO. 99219 | | |

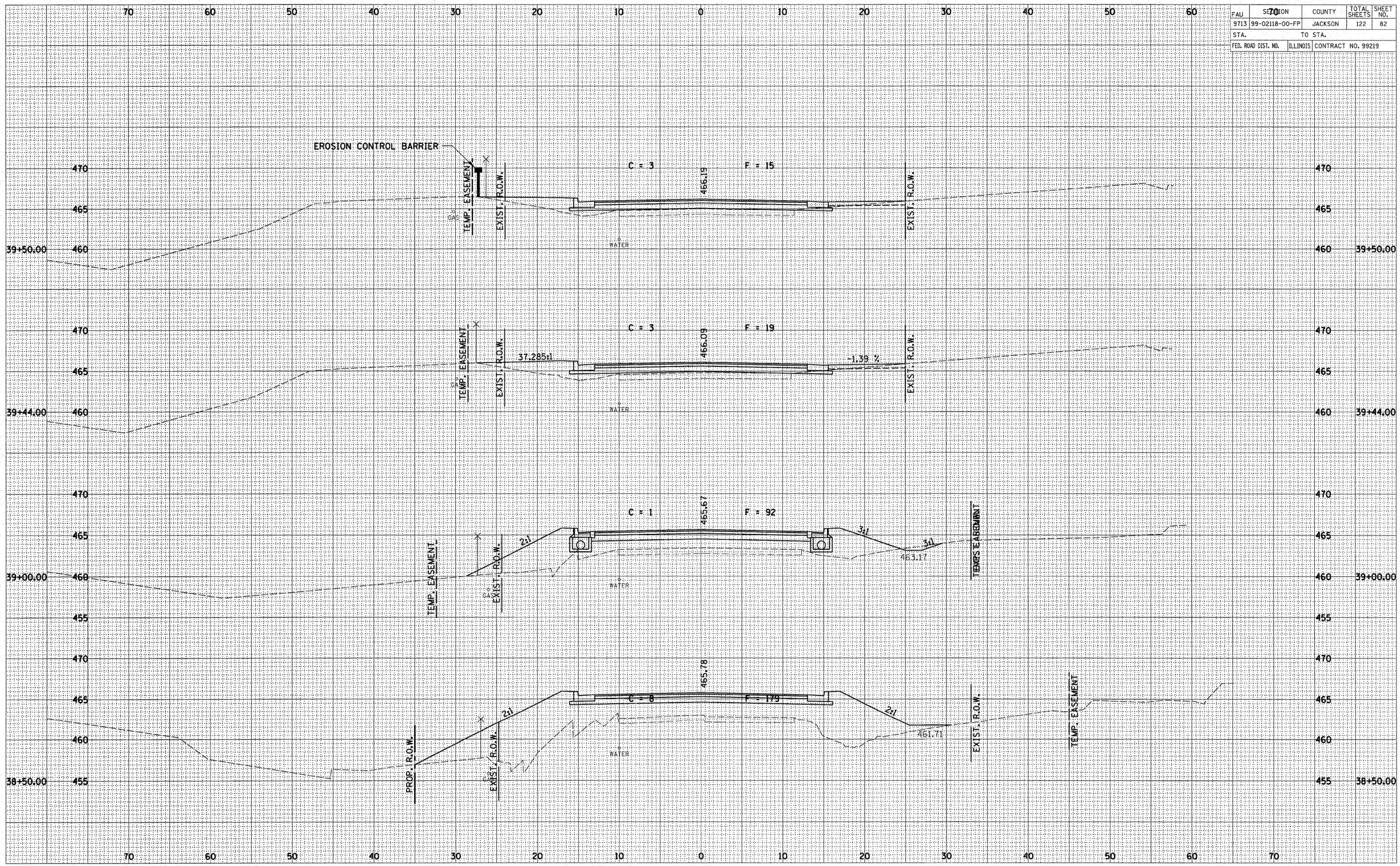


DATE: 20-Mar-07 10:30
FILE: P:\03\03470001\Cad\Phase II\4700lxs.dgn

| FAU | SECTION | COUNTY | TOTAL SHEETS | SHEET NO. |
|---|---|---|---|---|
| 9713 | 99-02118-00-FP | JACKSON | 122 | 83 |
| STA. | TO STA. | | | |
| FED. ROAD DIST. NO. | ILLINOIS | CONTRACT NO. 99219 | | |

FINAL SURVEY
NOTE BOOK
NO.
SURVEYED
PLOTTED
TEMPLATE
AREAS
AREAS CHECKED
BY
DATE

ORIGINAL SURVEY
NOTE BOOK
NO.
SURVEYED
PLOTTED
TEMPLATE
AREAS
AREAS CHECKED
BY
DATE

70 60 50 40 30 20 10 0 10 20 30 40 50 60 70

41+00.00

C = 2 F = 19

465.95

4:1

EXIST. R.O.W.

EXIST. R.O.W.
TEMP. EASEMENT

GAS

WATER

40+59.00

C = 48 F = 1

466.70

+9.84

4:1

EXIST. R.O.W.

EXIST. R.O.W.

GAS

WATER

40+50.00

C = 45 F = 1

466.80

EXIST. R.O.W.

EXIST. R.O.W.

GAS

WATER

40+00.00

C = 25 F = 5

466.87

EXIST. R.O.W.
TEMP. EASEMENT

EXIST. R.O.W.

GAS

WATER

470
465
460

DATE: 20-Mar-07 10:30
FILE: P:\03\0347000I\Cad\Phase II\4700lxs.dgn

| FAU | SECTION | COUNTY | TOTAL SHEETS | SHEET NO. |
|---|---|---|---|---|
| 9713 | 99-02118-00-FP | JACKSON | 122 | 84 |
| STA. | TO STA. | | | |
| FED. ROAD DIST. NO. | ILLINOIS | CONTRACT NO. 99219 | | |

| FINAL SURVEY | NOTE BOOK | NO. |
|---|---|---|
| SURVEYED | | |
| PLOTTED | | |
| TEMPLATE | | |
| AREAS | | |
| AREAS CHECKED | | |

| BY | DATE |
|---|---|
| | |

| ORIGINAL SURVEY | NOTE BOOK | NO. |
|---|---|---|
| SURVEYED | | |
| PLOTTED | | |
| TEMPLATE | | |
| AREAS | | |
| AREAS CHECKED | | |

| BY | DATE |
|---|---|
| | |

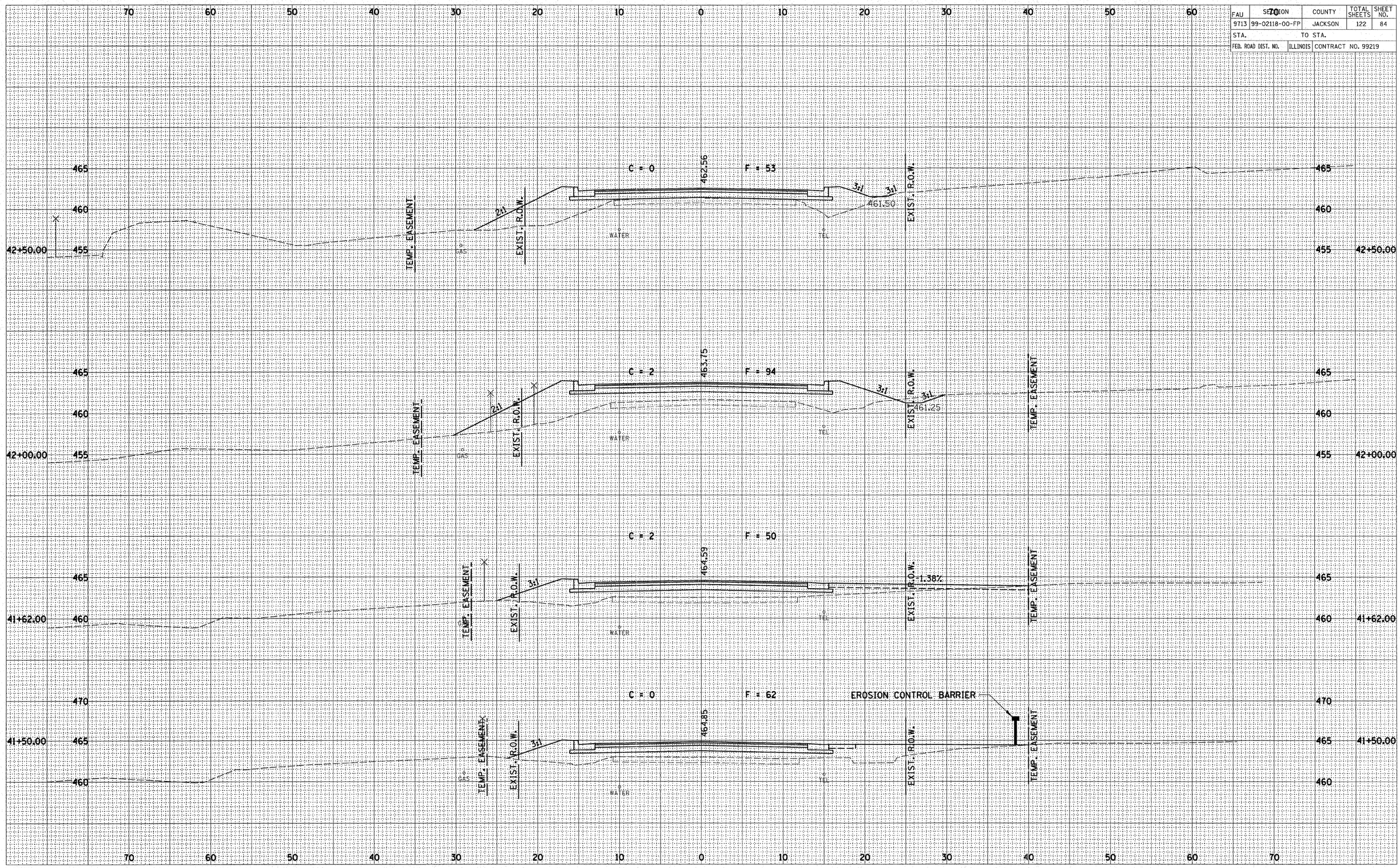


DATE: 20-Mar-07 10:30
FILE: P:\03\0347000\Cad\Phase II\4700lxs.dgn

| FAU | SECTION | COUNTY | TOTAL SHEETS | SHEET NO. |
|---|---|---|---|---|
| 9713 | 99-02118-00-FP | JACKSON | 122 | 85 |
| STA. | TO STA. | | | |
| FED. ROAD DIST. NO. | ILLINOIS | CONTRACT NO. 99219 | | |

FINAL SURVEY — NOTE BOOK — NO. — SURVEYED — PLOTTED — TEMPLATE — AREAS — AREAS CHECKED — BY — DATE

ORIGINAL SURVEY — NOTE BOOK — NO. — SURVEYED — PLOTTED — TEMPLATE — AREAS — AREAS CHECKED — BY — DATE

70 60 50 40 30 20 10 0 10 20 30 40 50 60 70

465 460 455 43+69.00

C = 88 F = 1

EXIST. R.O.W.

457.03

+12.30 %

EXIST. R.O.W.

TEMP. EASEMENT

WATER

470 465 460 455 43+50.00

C = 57 F = 0

EXIST. R.O.W.

TEMP. EASEMENT

458.18

-4.11%

EXIST. R.O.W.

TEMP. EASEMENT

WATER

470 465 460 43+00.00

C = 97 F = 0

TEMP. EASEMENT

+5.62%

EXIST. R.O.W.

460.73

EXIST. R.O.W.

CAS

WATER

TEL

470 465 460 42+90.00

EROSION CONTROL BARRIER

C = 95 F = 2

TEMP. EASEMENT

-0.52%

EXIST. R.O.W.

461.16

EXIST. R.O.W.

CAS

WATER

TEL

70 60 50 40 30 20 10 0 10 20 30 40 50 60 70

DATE: 20-Mar-07 10:30
FILE: P:\03\0347000\Cad\Phase II\4700ixs.dgn

| FAU | SECTION | COUNTY | TOTAL SHEETS | SHEET NO. |
|---|---|---|---|---|
| 9713 | 99-02118-00-FP | JACKSON | 122 | 86 |
| STA. | | TO STA. | | |
| FED. ROAD DIST. NO. | ILLINOIS | CONTRACT NO. 99219 | | |

FINAL SURVEY
NOTE BOOK
NO.
SURVEYED
PLOTTED
TEMPLATE
AREAS
AREAS CHECKED
BY
DATE

ORIGINAL SURVEY
NOTE BOOK
NO.
SURVEYED
PLOTTED
TEMPLATE
AREAS
AREAS CHECKED
BY
DATE

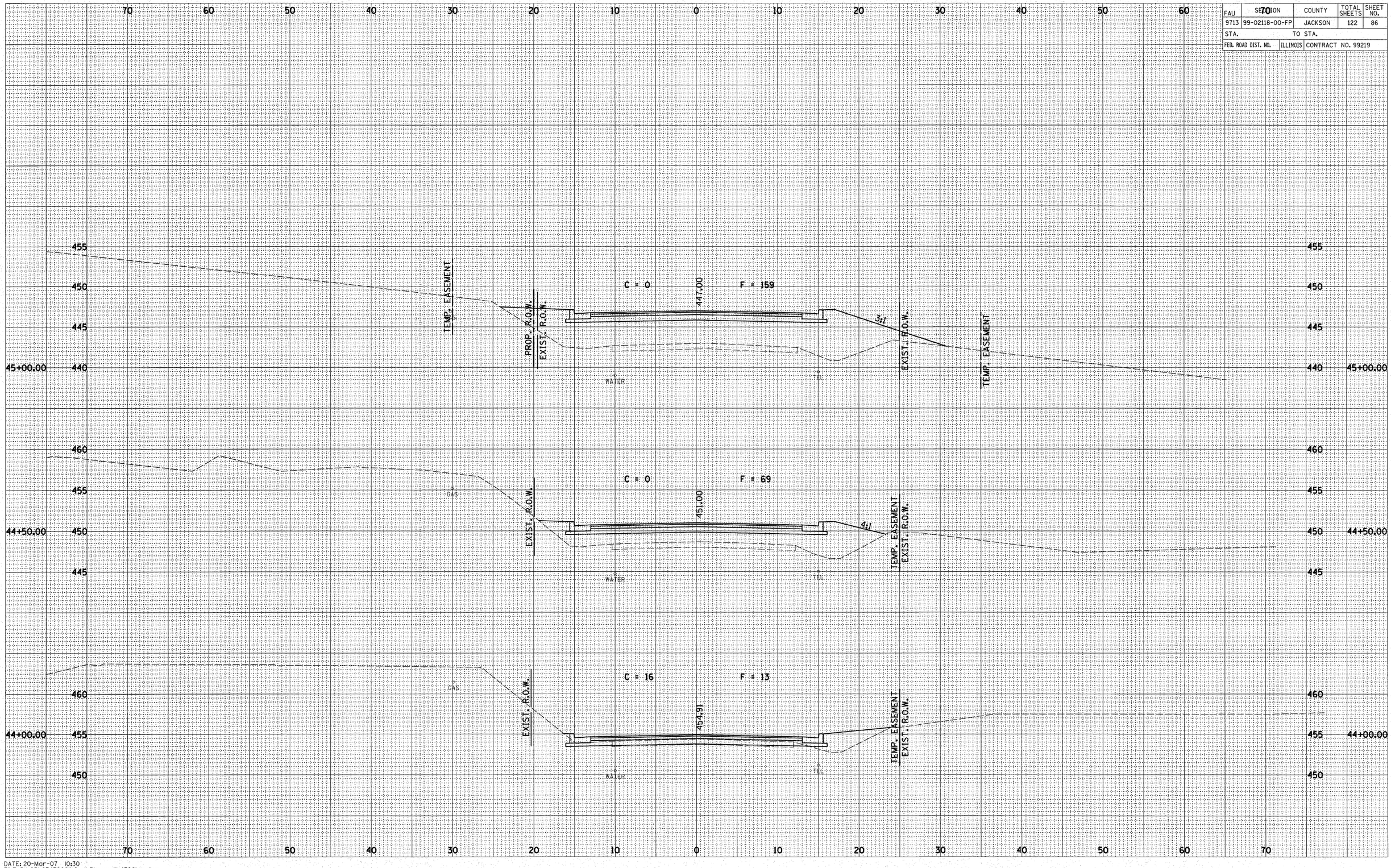


DATE: 20-Mar-07 10:30
FILE: P:\03\0347000I\Cad\Phase II\4700lxs.dgn

| FAU | SECTION | COUNTY | TOTAL SHEETS | SHEET NO. |
|---|---|---|---|---|
| 9713 | 99-02118-00-FP | JACKSON | 122 | 87 |
| STA. | TO STA. | | | |
| FED. ROAD DIST. NO. | ILLINOIS | CONTRACT NO. 99219 | | |

| ORIGINAL SURVEY | BY | DATE |
|---|---|---|
| NOTE BOOK | SURVEYED | |
| NO. | PLOTTED | |
| | TEMPLATE | |
| | AREAS | |
| | AREAS CHECKED | |

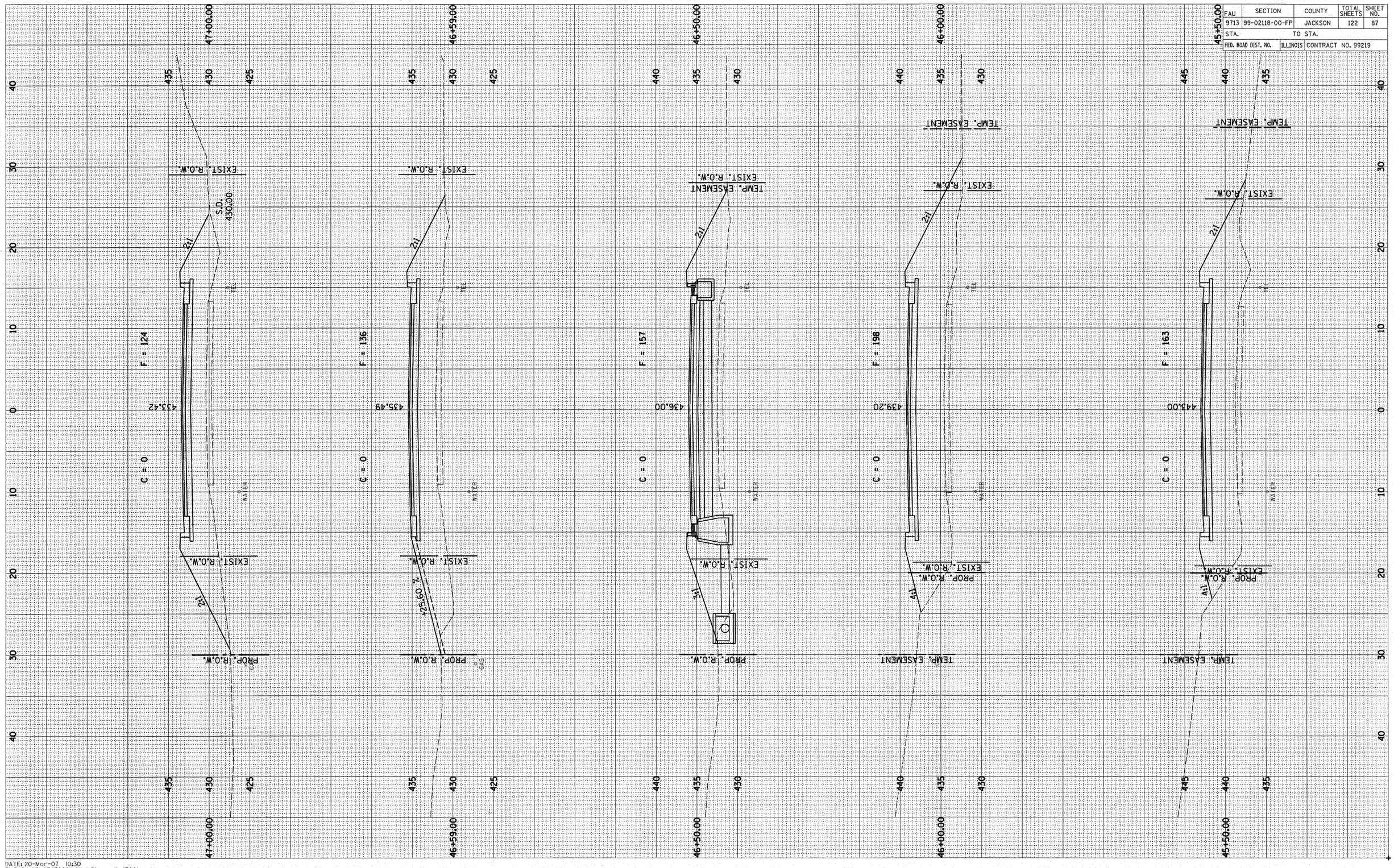


DATE: 20-Mar-07 10:30
FILE: P:\03\0347000\Cad\Phase II\4700lxs.dgn

| FAU | SECTION | COUNTY | TOTAL SHEETS | SHEET NO. |
|---|---|---|---|---|
| 9713 | 99-02118-00-FP | JACKSON | 122 | 88 |
| STA. | TO STA. | | | |
| FED. ROAD DIST. NO. | ILLINOIS | CONTRACT NO. 99219 | | |

| FINAL SURVEY | NOTE BOOK | NO. |
|---|---|---|
| ORIGINAL SURVEY | NOTE BOOK | NO. |

| | BY | DATE |
|---|---|---|
| SURVEYED | | |
| PLOTTED | | |
| TEMPLATE | | |
| AREAS | | |
| AREAS CHECKED | | |




DATE: 20-Mar-07 10:30
FILE: P:\03\0347000I\Cad\Phase II\4700lxs.dgn

| FAU | SECTION | COUNTY | TOTAL SHEETS | SHEET NO. |
|---|---|---|---|---|
| 9713 | 99-02118-00-FP | JACKSON | 122 | 89 |
| STA. | TO STA. | | | |
| FED. ROAD DIST. NO. | ILLINOIS | CONTRACT NO. 99219 | | |

| FINAL SURVEY | NOTE BOOK | NO. |
|---|---|---|
| SURVEYED | | |
| PLOTTED | | |
| REMARKS | | |
| AREAS | | |
| AREAS CHECKED | | |

| ORIGINAL SURVEY | NOTE BOOK | NO. |
|---|---|---|
| SURVEYED | | |
| PLOTED | | |
| REMARKS | | |
| AREAS | | |
| AREAS CHECKED | | |

| BY | DATE |
|---|---|
| | |

C = 0 F = 305

430.92

2:1 4:1

PROP. R.O.W. EXIST. R.O.W. EXIST. R.O.W. TEMP. EASEMENT

GAS WATER TEL 12" SS

50+00.00

C = 1 F = 347

429.98

2:1 10.74%

PROP. R.O.W. EXIST. R.O.W. EXIST. R.O.W. TEMP. EASEMENT

GAS WATER TEL 12" SS

49+61.00

C = 0 F = 392

429.79

2:1

PROP. R.O.W. EXIST. R.O.W. EXIST. R.O.W. TEMP. EASEMENT

GAS WATER TEL 12" SS

49+50.00

70 60 50 40 30 20 10 0 10 20 30 40 50 60 70

435 430 425 420 415

DATE: 20-Mar-07 10:30
FILE: P:\03\0347000\Cad\Phase II\4700ixs.dgn

| FAU | SECTION | COUNTY | TOTAL SHEETS | SHEET NO. |
|---|---|---|---|---|
| 9713 | 99-02118-00-FP | JACKSON | 122 | 90 |
| STA. | TO STA. | | | |
| FED. ROAD DIST. NO. | ILLINOIS | CONTRACT NO. 99219 | | |

| FINAL SURVEY | NOTE BOOK | NO. |
|---|---|---|
| | SURVEYED | BY |
| | PLOTTED | |
| | TEMPLATE | |
| | AREAS | |
| | AREAS CHECKED | DATE |

| ORIGINAL SURVEY | NOTE BOOK | NO. |
|---|---|---|
| | SURVEYED | BY |
| | PLOTTED | |
| | TEMPLATE | |
| | AREAS | |
| | AREAS CHECKED | DATE |

70 60 50 40 30 20 10 0 10 20 30 40 50 60 70

445 440 435 430 425

51+32.00

C = 273 F = 0

435.81

+8.16 %

GAS TEL WATER

12" SS

PROP. R.O.W.

EXIST. R.O.W.

TEMP. EASEMENT

51+00.00

C = 16 F = 17

434.78

4:1

GAS TEL WATER

12" SS

EXIST. R.O.W.

TEMP. EASEMENT

50+57.00

C = 1 F = 142

432.95

3:1

-5.08%

GAS TEL WATER

12" SS

PROP. R.O.W.

EXIST. R.O.W.

TEMP. EASEMENT

50+50.00

C = 1 F = 162

432.66

3:1

GAS TEL WATER

12" SS

PROP. R.O.W.

EXIST. R.O.W.

TEMP. EASEMENT

DATE: 20-Mar-07 10:30
FILE: P:\03\0347000I\Cad\Phase II\4700lxs.dgn

| FAU | SECTION | COUNTY | TOTAL SHEETS | SHEET NO. |
|---|---|---|---|---|
| 9713 | 99-02118-00-FP | JACKSON | 122 | 91 |
| STA. | TO STA. | | | |
| FED. ROAD DIST. NO. | ILLINOIS | CONTRACT NO. 99219 | | |

FINAL SURVEY — NOTE BOOK — NO. — SURVEYED — PLOTTED — TEMPLATE — AREAS — AREAS CHECKED — BY — DATE

ORIGINAL SURVEY — NOTE BOOK — NO. — SURVEYED — PLOTTED — TEMPLATE — AREAS — AREAS CHECKED — BY — DATE

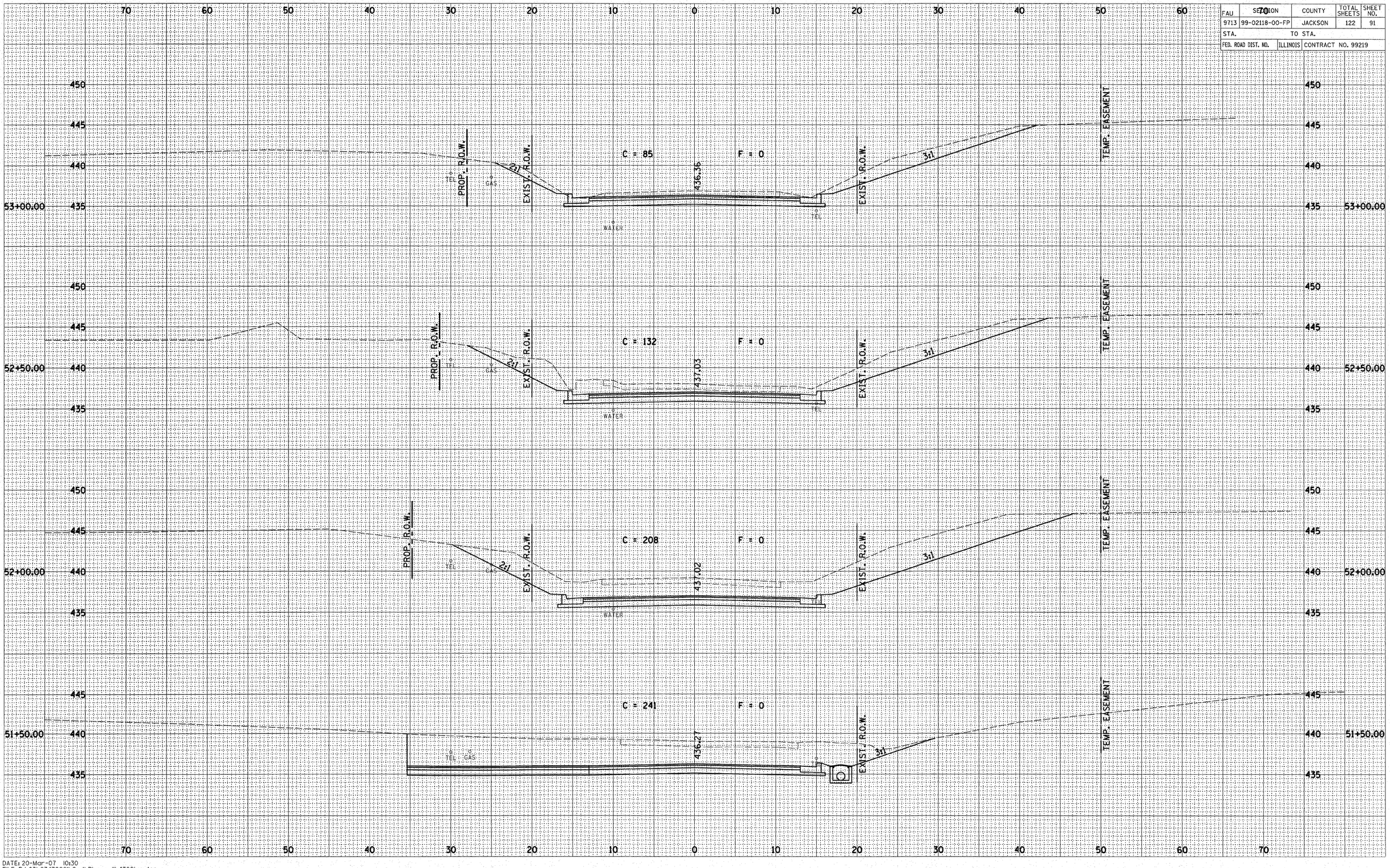


DATE: 20-Mar-07 10:30
FILE: P:\03\034T000I\Cad\Phase II\4700ixs.dgn

| ORIGINAL SURVEY | | BY | DATE |
|---|---|---|---|
| NOTE BOOK | SURVEYED | | |
| NO. | PLOTTED | | |
| | TEMPLATE | | |
| | AREAS | | |
| | AREAS CHECKED | | |

| FINAL SURVEY | | BY | DATE |
|---|---|---|---|
| NOTE BOOK | SURVEYED | | |
| NO. | PLOTTED | | |
| | TEMPLATE | | |
| | AREAS | | |
| | AREAS CHECKED | | |

DATE: 20-Mar-07 10:30
FILE: P:\03\034F000I\Cad\Phase II\4700ixs.dgn

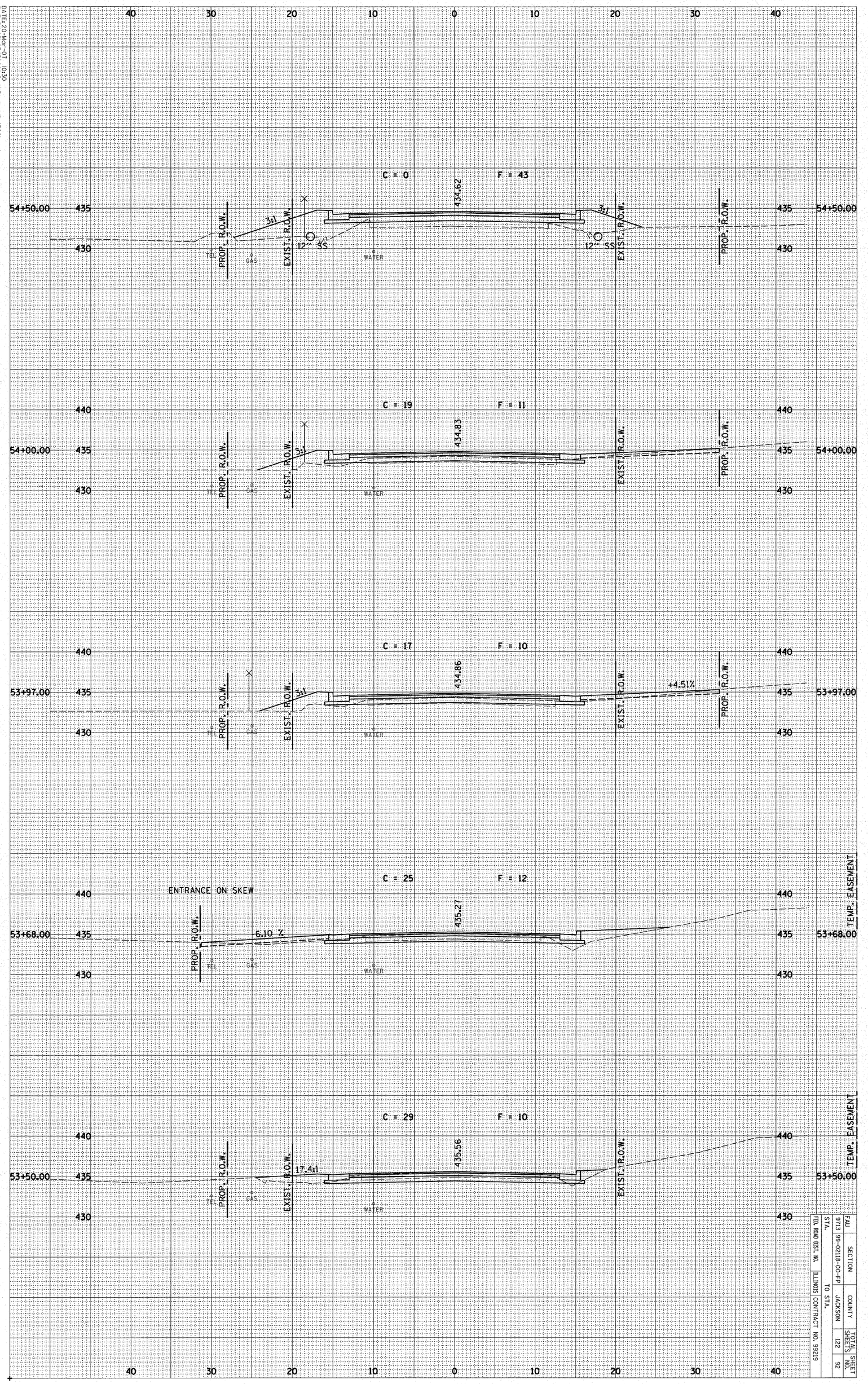


| FAU | SECTION | COUNTY | TOTAL SHEETS | SHEET NO. |
|---|---|---|---|---|
| 9713 | 99-02118-00-FP | JACKSON | 122 | 92 |
| FED. ROAD DIST. NO. | ILLINOIS | CONTRACT NO. 99219 | | |
| STA. | TO STA. | | | |

| FAU | SECTION | COUNTY | TOTAL SHEETS | SHEET NO. |
|---|---|---|---|---|
| 9713 | 99-02118-00-FP | JACKSON | 122 | 93 |
| STA. | TO STA. | | | |
| FED. ROAD DIST. NO. | ILLINOIS | CONTRACT NO. 99219 | | |

| FINAL SURVEY | BY | DATE |
|---|---|---|
| NOTE BOOK | SURVEYED | |
| NO. | PLOTTED | |
| | TEMPORARY SITE AREAS | |
| | AREAS CHECKED | |

| ORIGINAL SURVEY | BY | DATE |
|---|---|---|
| NOTE BOOK | SURVEYED | |
| NO. | PLOTTED | |
| | TEMPORARY SITE AREAS | |
| | AREAS CHECKED | |

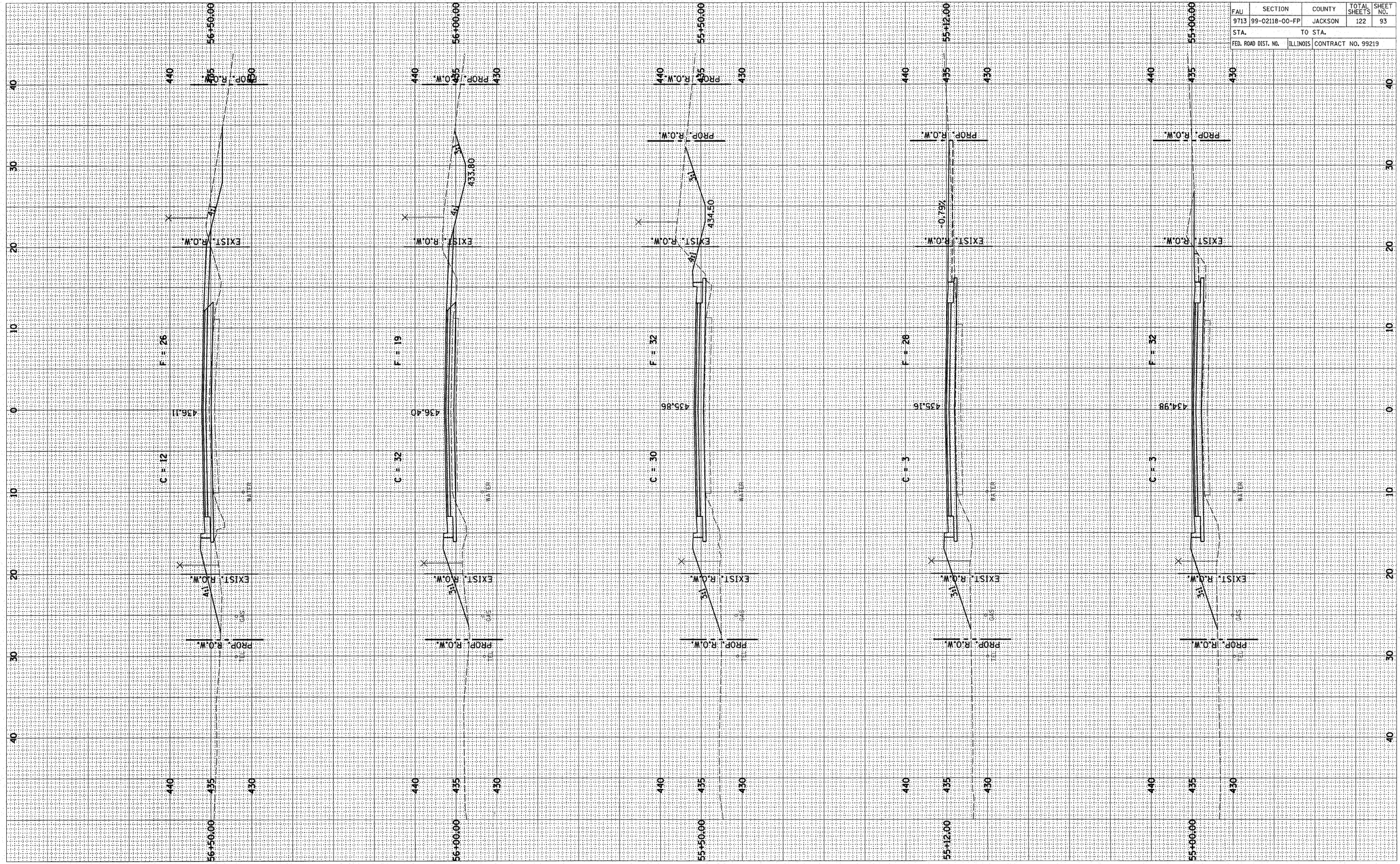


DATE: 20-Mar-07 10:30
FILE: P:\03\0347000I\Cad\Phase II\4700lxs.dgn

| FAU | SECTION | COUNTY | TOTAL SHEETS | SHEET NO. |
|---|---|---|---|---|
| 9713 | 99-02118-00-FP | JACKSON | 122 | 94 |
| STA. | TO STA. | | | |
| FED. ROAD DIST. NO. | ILLINOIS | CONTRACT NO. 99219 | | |

FINAL SURVEY — NOTE BOOK — NO.
SURVEYED — PLOTTED — SUBMITTED — AREAS — AREAS CHECKED
BY — DATE

ORIGINAL SURVEY — NOTE BOOK — NO.
SURVEYED — PLOTTED — SUBMITTED — AREAS — AREAS CHECKED
BY — DATE

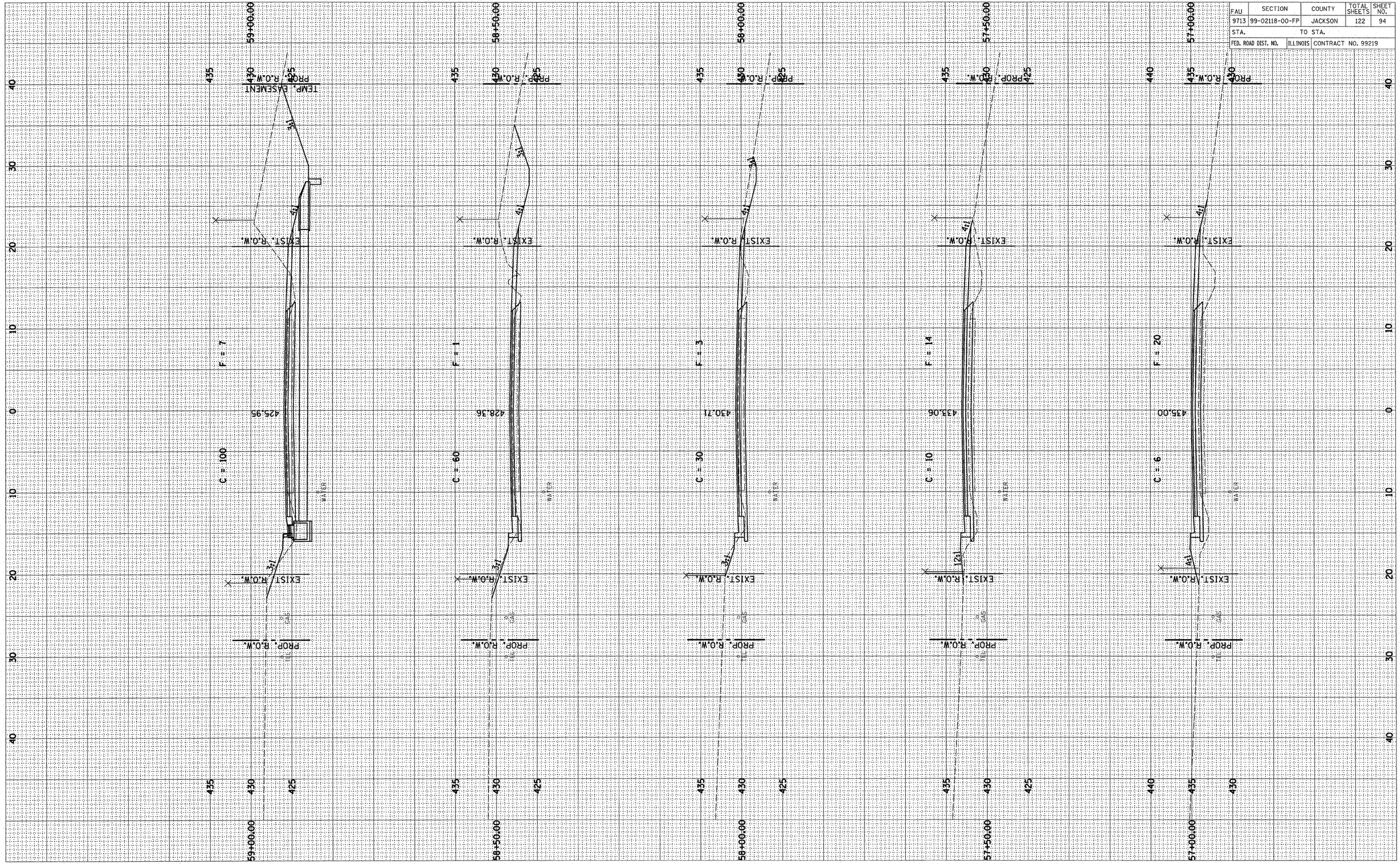


DATE: 20-Mar-07 10:30
FILE: P:\03\0347000I\Cad\Phase II\4700Ixs.dgn

| FAU | SECTION | COUNTY | TOTAL SHEETS | SHEET NO. |
|---|---|---|---|---|
| 9713 | 99-02118-00-FP | JACKSON | 122 | 95 |
| STA. | TO STA. | | | |
| FED. ROAD DIST. NO. | ILLINOIS | CONTRACT NO. 99219 | | |

FINAL SURVEY
NOTE BOOK
NO.
SURVEYED
PLOTTED
TYPED/TRACE
AREAS
AREAS CHECKED
BY
DATE

ORIGINAL SURVEY
NOTE BOOK
NO.
SURVEYED
PLOTTED
TYPED/TRACE
AREAS
AREAS CHECKED
BY
DATE

70 60 50 40 30 20 10 0 10 20 30 40 50 60 70

C = 204 F = 12
417.91
EXIST. R.O.W.
PROP. R.O.W.
TEMP. EASEMENT
4:1
3:1
TEL
GAS
WATER
61+00.00

C = 274 F = 6
419.28
EXIST. R.O.W.
PROP. R.O.W.
TEMP. EASEMENT
4:1
3:1
TEL
GAS
WATER
60+50.00

C = 268 F = 8
421.31
EXIST. R.O.W.
PROP. R.O.W.
TEMP. EASEMENT
4:1
3:1
TEL
GAS
WATER
60+00.00

C = 128 F = 8
423.66
6.556:1
EXIST. R.O.W.
PROP. R.O.W.
TEMP. EASEMENT
4:1
3:1
TEL
GAS
WATER
59+50.00

430 425 420 415

DATE: 20-Mar-07 10:30
FILE: P:\03\0347000I\Cad\Phase II\4700Ixs.dgn

| FAU | SECTION | COUNTY | TOTAL SHEETS | SHEET NO. |
|---|---|---|---|---|
| 9713 | 99-02118-00-FP | JACKSON | 122 | 96 |
| STA. | TO STA. | | | |
| FED. ROAD DIST. NO. | ILLINOIS | CONTRACT NO. 99219 | | |

FINAL SURVEY — NOTE BOOK NO.

| | BY | DATE |
|---|---|---|
| SURVEYED | | |
| PLOTTED | | |
| ESTIMATE | | |
| AREAS | | |
| AREAS CHECKED | | |

ORIGINAL SURVEY — NOTE BOOK NO.

| | BY | DATE |
|---|---|---|
| SURVEYED | | |
| PLOTTED | | |
| ESTIMATE | | |
| AREAS | | |
| AREAS CHECKED | | |

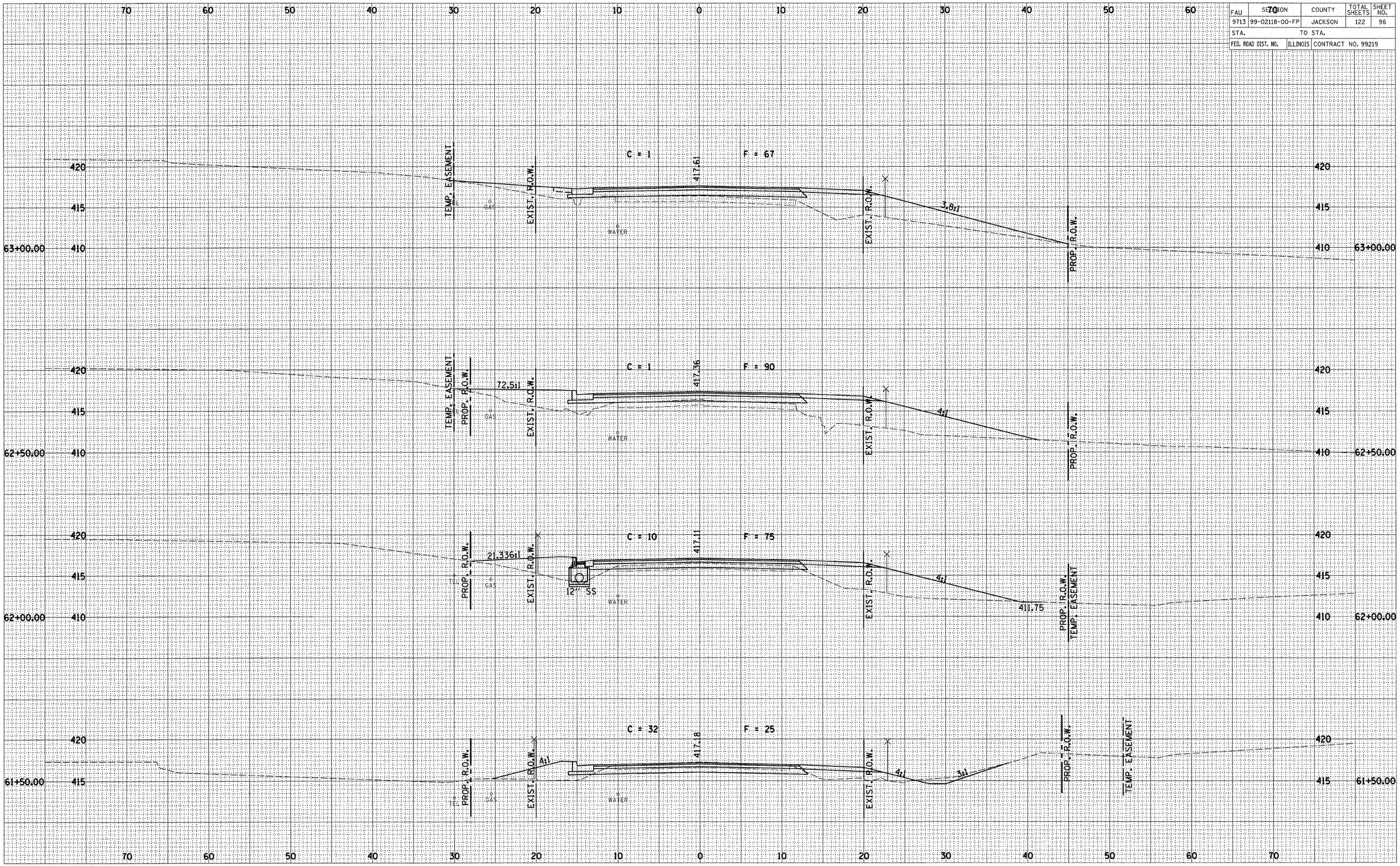


DATE: 20-Mar-07 10:30
FILE: P:\03\0347000I\Cad\Phase II\4700lxs.dgn

| FAU | SECTION | COUNTY | TOTAL SHEETS | SHEET NO. |
|---|---|---|---|---|
| 9713 | 99-02118-00-FP | JACKSON | 122 | 97 |
| STA. | TO STA. | | | |
| FED. ROAD DIST. NO. | ILLINOIS | CONTRACT NO. 99219 | | |

| FINAL SURVEY | BY | DATE |
|---|---|---|
| NOTE BOOK | | |
| NO. | | |
| SURVEYED | | |
| PLOTTED | | |
| TEMPLATE | | |
| AREAS | | |
| AREAS CHECKED | | |

| ORIGINAL SURVEY | BY | DATE |
|---|---|---|
| NOTE BOOK | | |
| NO. | | |
| SURVEYED | | |
| PLOTTED | | |
| TEMPLATE | | |
| AREAS | | |
| AREAS CHECKED | | |

70 60 50 40 30 20 10 0 10 20 30 40 50 60 70

425 420 415 410

64+00.00

TEMP. EASEMENT
EXIST. R.O.W.
C = 76
F = 3
418.11
WATER
EXIST. R.O.W.
4:1
3:1
415.20
PROP. R.O.W.

425 420 415 410

63+87.00

TEMP. EASEMENT
11.26 %
EXIST. R.O.W.
C = 65
F = 4
418.04
WATER
EXIST. R.O.W.
4:1
3:1
415.16
PROP. R.O.W.

425 420 415 410

63+50.00

TEMP. EASEMENT
15.844:1
EXIST. R.O.W.
C = 4
F = 27
417.86
GAS
WATER
EXIST. R.O.W.
4:1
415.05
PROP. R.O.W.

420 415 410

63+14.00

TEMP. EASEMENT
+1.94 %
EXIST. R.O.W.
C = 4
F = 49
417.68
GAS
WATER
EXIST. R.O.W.
4:1
PROP. R.O.W.

70 60 50 40 30 20 10 0 10 20 30 40 50 60 70

DATE: 20-Mar-07 10:30
FILE: P:\03\034T000I\Cad\Phase II\4700ixs.dgn

| FAU | SECTION | COUNTY | TOTAL SHEETS | SHEET NO. |
|---|---|---|---|---|
| 9713 | 99-02118-00-FP | JACKSON | 122 | 98 |
| STA. | | TO STA. | | |
| FED. ROAD DIST. NO. | ILLINOIS | CONTRACT NO. 99219 | | |

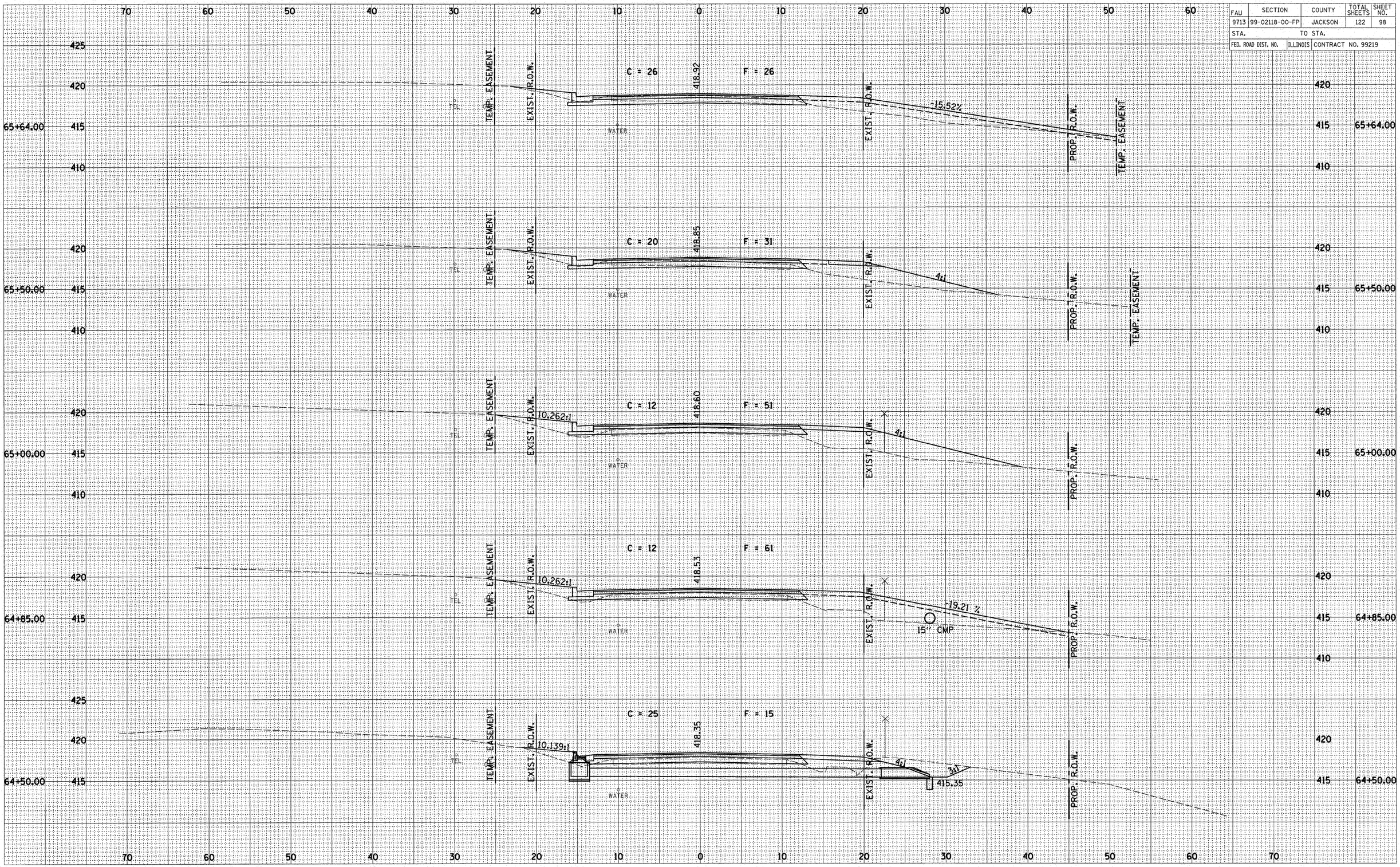


FINAL SURVEY
NOTE BOOK NO.
SURVEYED
PLOTTED
TEMPLATE
AREAS
AREAS CHECKED
BY
DATE

ORIGINAL SURVEY
NOTE BOOK NO.
SURVEYED
PLOTTED
TEMPLATE
AREAS
AREAS CHECKED
BY
DATE

DATE: 20-Mar-07 10:30
FILE: P:\03\0347000I\Cad\Phase II\4700Ixs.dgn

| FAU | SECTION | COUNTY | TOTAL SHEETS | SHEET NO. |
|---|---|---|---|---|
| 9713 | 99-02118-00-FP | JACKSON | 122 | 99 |
| STA. | | TO STA. | | |
| FED. ROAD DIST. NO. | ILLINOIS | CONTRACT NO. 99219 | | |

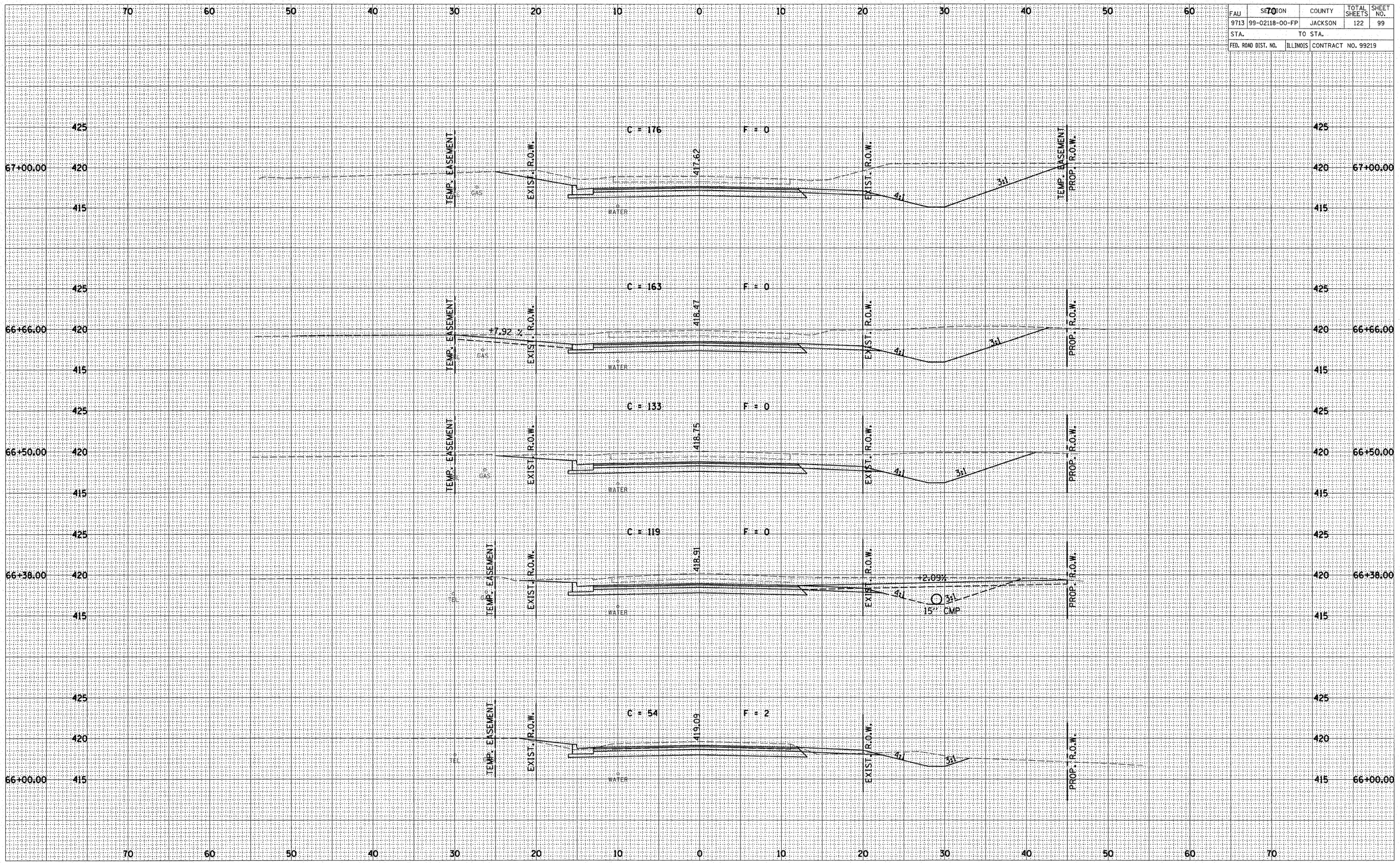


FINAL SURVEY
NOTE BOOK NO.
SURVEYED
PLOTTED
TEMPLATE
AREAS
AREAS CHECKED
BY
DATE

ORIGINAL SURVEY
NOTE BOOK NO.
SURVEYED
PLOTTED
TEMPLATE
AREAS
AREAS CHECKED
BY
DATE

DATE: 20-Mar-07 10:30
FILE: P:\03\0347000I\Cad\Phase II\4700lxs.dgn

| FAU | SECTION | COUNTY | TOTAL SHEETS | SHEET NO. |
|---|---|---|---|---|
| 9713 | 99-02118-00-FP | JACKSON | 122 | 100 |
| STA. | TO STA. | | | |
| FED. ROAD DIST. NO. | ILLINOIS | CONTRACT NO. 99219 | | |

| FINAL SURVEY | BY | DATE |
|---|---|---|
| SURVEYED | | |
| PLOTTED | | |
| TEMPORARY RTE | | |
| NOTE BOOK | | |
| AREAS | | |
| NO. AREAS CHECKED | | |

| ORIGINAL SURVEY | BY | DATE |
|---|---|---|
| SURVEYED | | |
| PLOTTED | | |
| TEMPORARY RTE | | |
| NOTE BOOK | | |
| AREAS | | |
| NO. AREAS CHECKED | | |

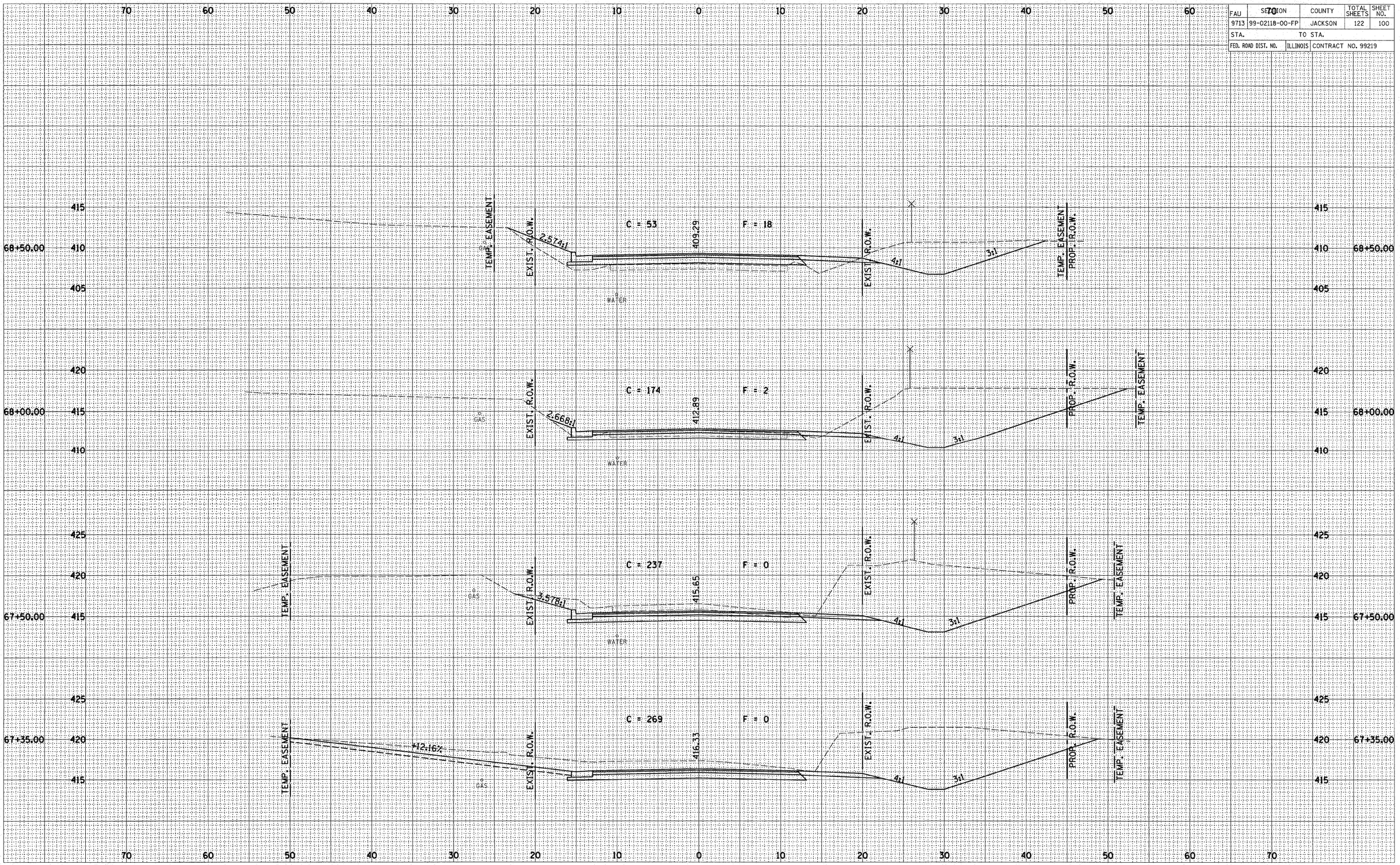


DATE: 20-Mar-07 10:30
FILE: P:\03\0347000I\Cad\Phase II\4700ixs.dgn

| FAU | SECTION | COUNTY | TOTAL SHEETS | SHEET NO. |
|---|---|---|---|---|
| 9713 | 99-02118-00-FP | JACKSON | 122 | 101 |
| STA. | | TO STA. | | |
| FED. ROAD DIST. NO. | ILLINOIS | CONTRACT NO. 99219 | | |

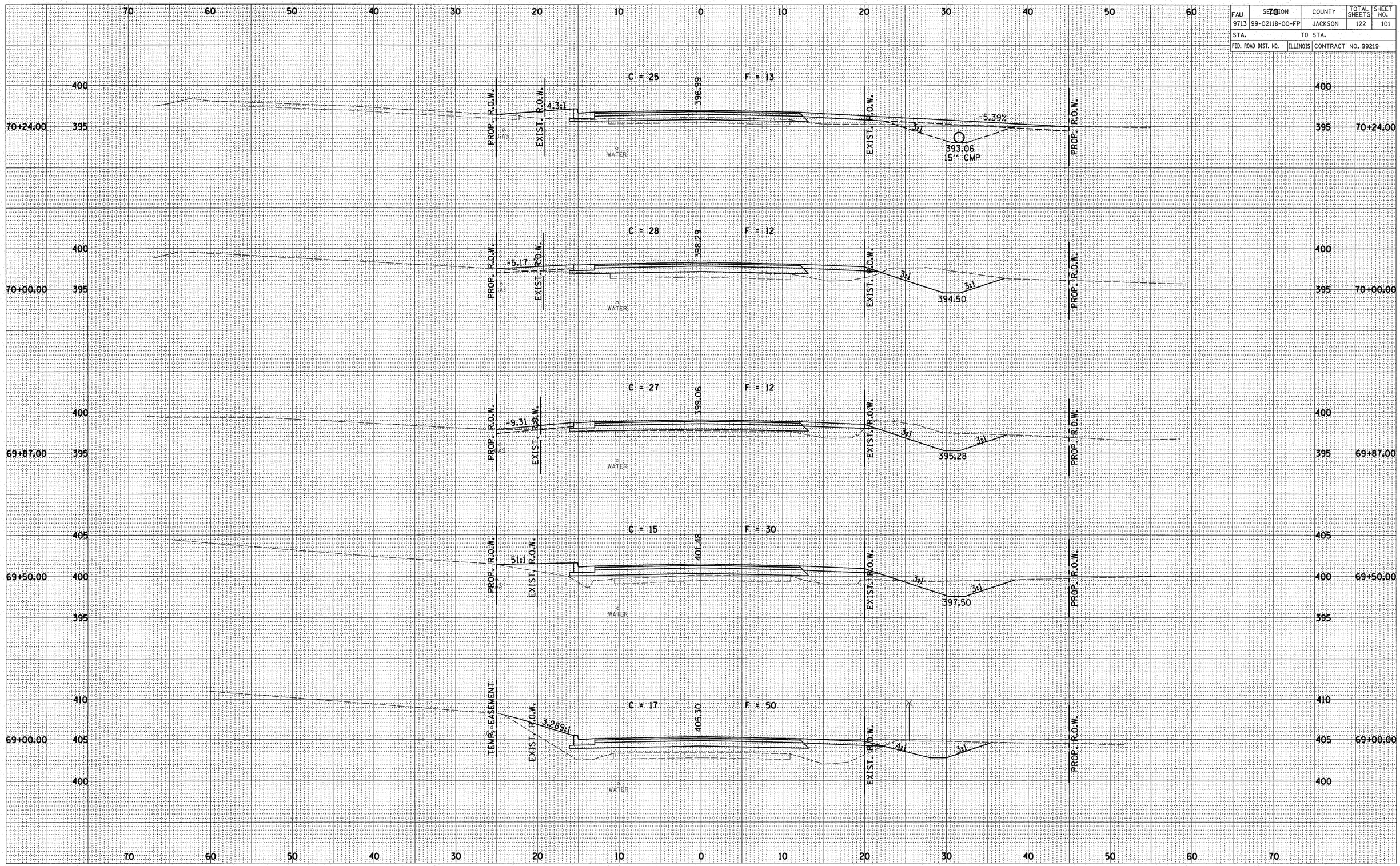


FINAL SURVEY
NOTE BOOK NO.
SURVEYED
PLOTTED
TEMPLATE
AREAS
AREAS CHECKED
BY
DATE

ORIGINAL SURVEY
NOTE BOOK NO.
SURVEYED
PLOTTED
TEMPLATE
AREAS
AREAS CHECKED
BY
DATE

DATE: 20-Mar-07 10:30
FILE: P:\03\03470001\Cad\Phase II\4700lxs.dgn

| FAU | SECTION | COUNTY | TOTAL SHEETS | SHEET NO. |
|---|---|---|---|---|
| 9713 | 99-02118-00-FP | JACKSON | 122 | 102 |
| STA. | | TO STA. | | |
| FED. ROAD DIST. NO. | ILLINOIS | CONTRACT NO. 99219 | | |

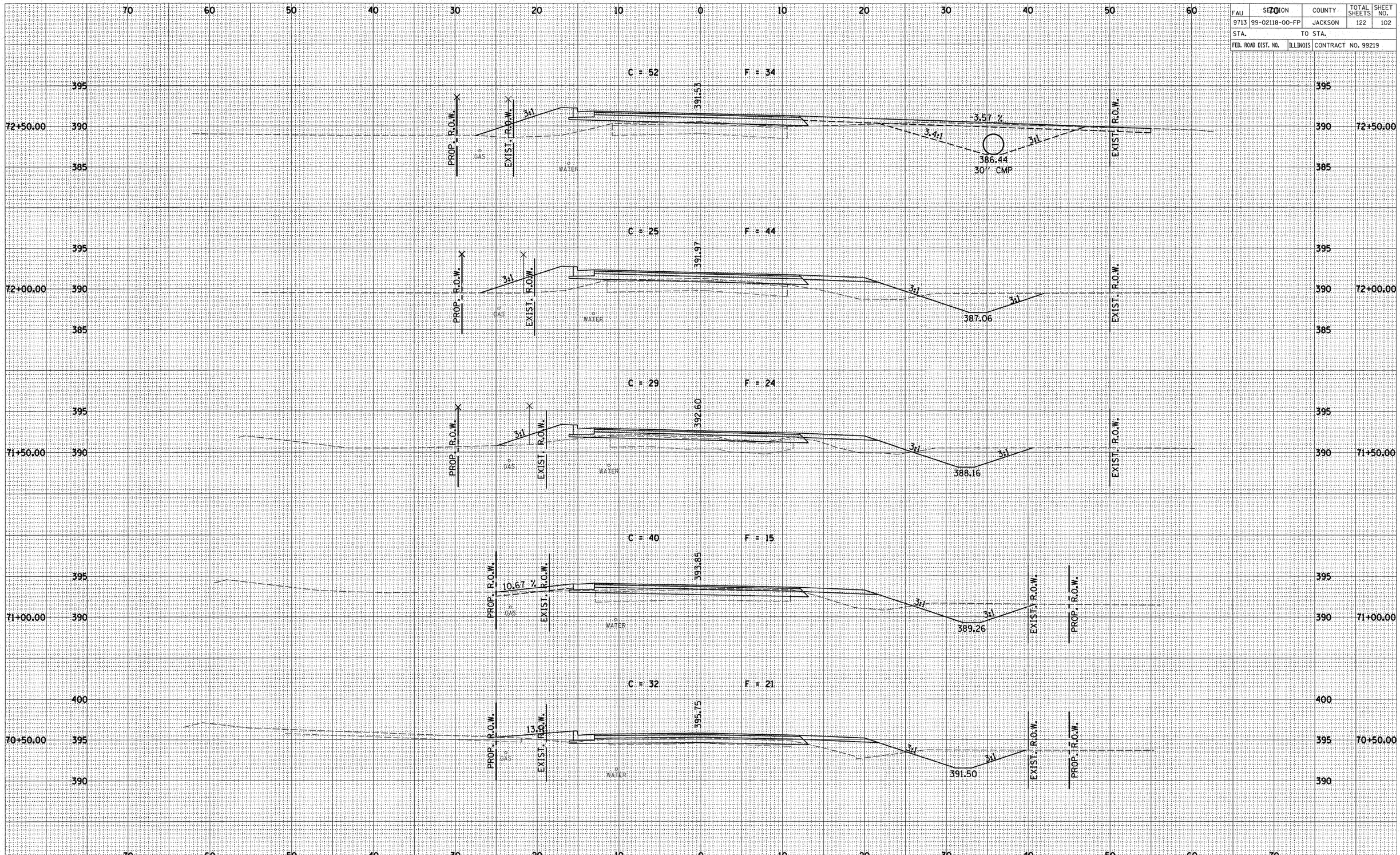


FINAL SURVEY
NOTE BOOK NO.
SURVEYED
PLOTTED
TEMPLATE
AREAS
AREAS CHECKED
BY
DATE

ORIGINAL SURVEY
NOTE BOOK NO.
SURVEYED
PLOTTED
TEMPLATE
AREAS
AREAS CHECKED
BY
DATE

DATE: 20-Mar-07 10:30
FILE: P:\03\03470001\Cad\Phase II\4700lxs.dgn

| FAU | SECTION | COUNTY | TOTAL SHEETS | SHEET NO. |
|---|---|---|---|---|
| 9713 | 99-02118-00-FP | JACKSON | 122 | 103 |
| STA. | TO STA. | | | |
| FED. ROAD DIST. NO. | ILLINOIS | CONTRACT NO. 99219 | | |

FINAL SURVEY — NOTE BOOK NO. — SURVEYED — PLOTTED — DRAWN — AREAS — AREAS CHECKED — BY — DATE

ORIGINAL SURVEY — NOTE BOOK NO. — SURVEYED — PLOTTED — DRAWN — AREAS — AREAS CHECKED — BY — DATE

70 60 50 40 30 20 10 0 10 20 30 40 50 60 70

395 390 385

74+50.00

C = 9 F = 65

PROP. R.O.W. EXIST. R.O.W. 3:1 2:1 386.25 WATER 390.73 3:1 3:1 385.38 WETLANDS SITE 2 WETLAND EXIST. R.O.W.

74+00.00

C = 10 F = 59

PROP. R.O.W. EXIST. R.O.W. 2:1 3:1 386.50 WATER 390.74 3:1 3:1 2:1 385.54 WETLANDS SITE 2 EXIST. R.O.W. WETLAND

73+50.00

C = 13 F = 58

PROP. R.O.W. 2:1 EXIST. R.O.W. 387.00 WATER 390.85 3:1 3:1 2:1 385.84 WETLANDS SITE 2 WETLAND EXIST. R.O.W.

73+00.00

C = 12 F = 62

PROP. R.O.W. EXIST. R.O.W. 3:1 GAS WATER 391.12 3:1 3:1 2:1 386.14 WETLANDS SITE 2 WETLAND EXIST. R.O.W.

72+55.00

C = 47 F = 36

PROP. R.O.W. EXIST. R.O.W. 3:1 GAS WATER 391.48 3.92 % 3.5:1 386.70 30" CMP EXIST. R.O.W.

70 60 50 40 30 20 10 0 10 20 30 40 50 60 70

DATE: 20-Mar-07 10:30
FILE: P:\03\0347000I\Cad\Phase II\4700lxs.dgn

| FAU | SECTION | COUNTY | TOTAL SHEETS | SHEET NO. |
|---|---|---|---|---|
| 9713 | 99-02118-00-FP | JACKSON | 122 | 104 |
| STA. | | TO STA. | | |
| FED. ROAD DIST. NO. | ILLINOIS | CONTRACT NO. 99219 | | |

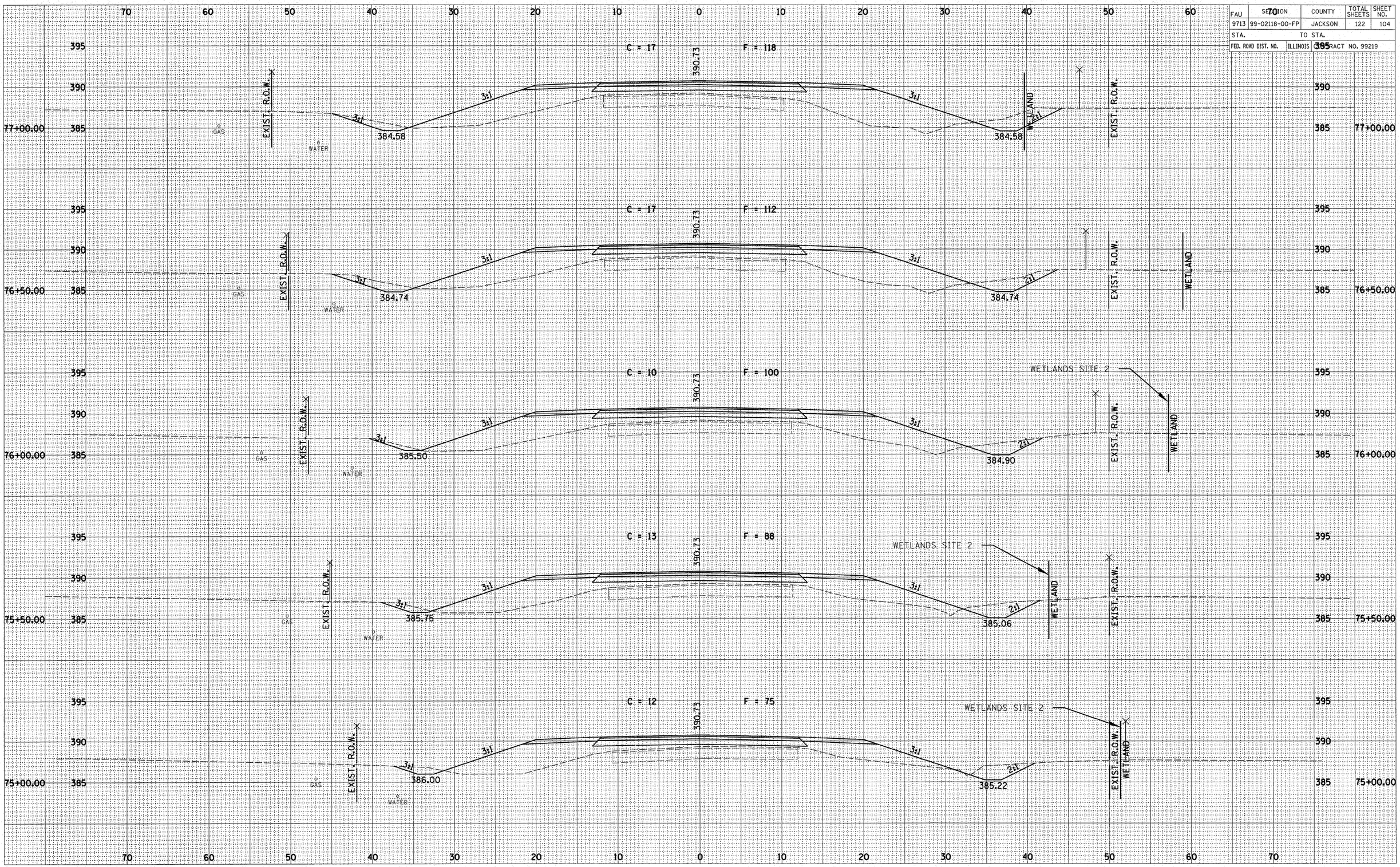


FINAL SURVEY
NOTE BOOK NO.
SURVEYED
PLOTTED
TEMPLATE
AREAS
AREAS CHECKED
BY
DATE

ORIGINAL SURVEY
NOTE BOOK NO.
SURVEYED
PLOTTED
TEMPLATE
AREAS
AREAS CHECKED
BY
DATE

DATE: 20-Mar-07 10:30
FILE: P:\03\0347000I\Cad\Phase II\4700lxs.dgn

| FAU | SECTION | COUNTY | TOTAL SHEETS | SHEET NO. |
|---|---|---|---|---|
| 9713 | 99-02118-00-FP | JACKSON | 122 | 105 |
| STA. | | TO STA. | | |
| FED. ROAD DIST. NO. | ILLINOIS | CONTRACT NO. 99219 | | |

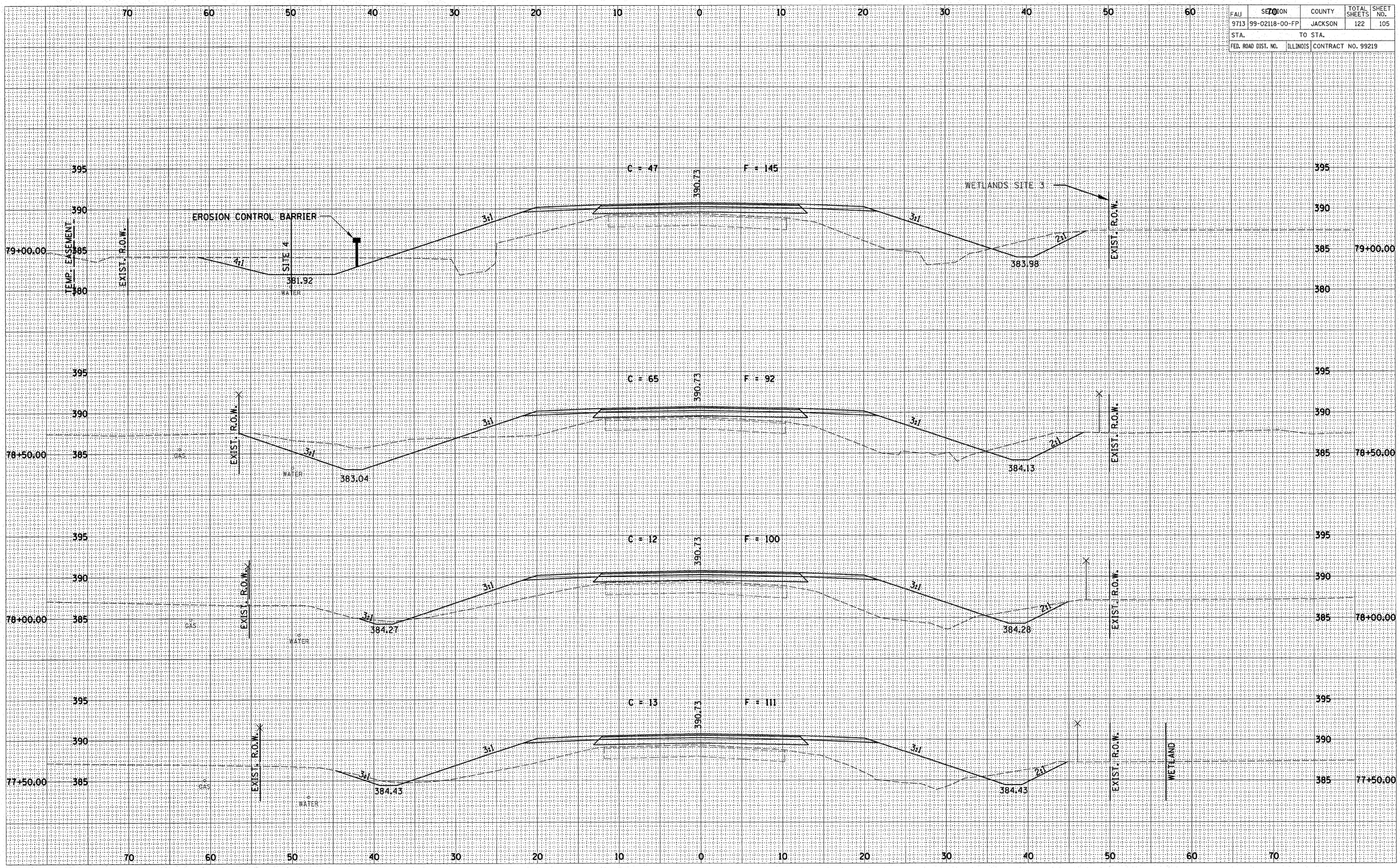


FINAL SURVEY | NOTE BOOK NO. | SURVEYED | PLOTTED | TEMPLATE | AREAS | AREAS CHECKED | BY | DATE

ORIGINAL SURVEY | NOTE BOOK NO. | SURVEYED | PLOTTED | TEMPLATE | AREAS | AREAS CHECKED | BY | DATE

DATE: 20-Mar-07 10:30
FILE: P:\03\03470001\Cad\Phase II\4700lxs.dgn

| FAU | SECTION | COUNTY | TOTAL SHEETS | SHEET NO. |
|---|---|---|---|---|
| 9713 | 99-02118-00-FP | JACKSON | 122 | 106 |
| STA. | | TO STA. | | |
| FED. ROAD DIST. NO. | ILLINOIS | CONTRACT NO. 99219 | | |

FINAL SURVEY — NOTE BOOK — NO. — SURVEYED — PLOTTED — DRAWN — TRACED — AREAS — AREAS CHECKED — BY — DATE

ORIGINAL SURVEY — NOTE BOOK — NO. — SURVEYED — PLOTTED — DRAWN — TRACED — AREAS — AREAS CHECKED — BY — DATE

81 + 20.71 BK. OF EAST ABUTMENT
AHEAD C = 203 F = 258
BACK C = 0 F = 0

80 + 69.29 BK. OF WEST ABUTMENT
AHEAD C = 0 F = 0
BACK C = 130 F = 202

C = 130 F = 202
C = 125 F = 229
C = 154 F = 175

390.73

EXIST. R.O.W.
SITE 4
TEMP. EASEMENT
EROSION CONTROL BARRIER
PROPOSED R.O.W. LINE 85' RT.
WETLANDS SITE 3
WETLAND
WATER
3:1
4:1
2:1
382.50
381.15
383.53
381.41
383.68
381.67
383.83
81+00.00
80+50.00
80+00.00
79+50.00

DATE: 20-Mar-07 10:30
FILE: P:\03\0347000I\Cad\Phase II\4700lxs.dgn

| FAU | SECTION | COUNTY | TOTAL SHEETS | SHEET NO. |
|---|---|---|---|---|
| 9713 | 99-02118-00-FP | JACKSON | 122 | 107 |
| STA. | | TO STA. | | |
| FED. ROAD DIST. NO. | ILLINOIS | CONTRACT NO. 99219 | | |

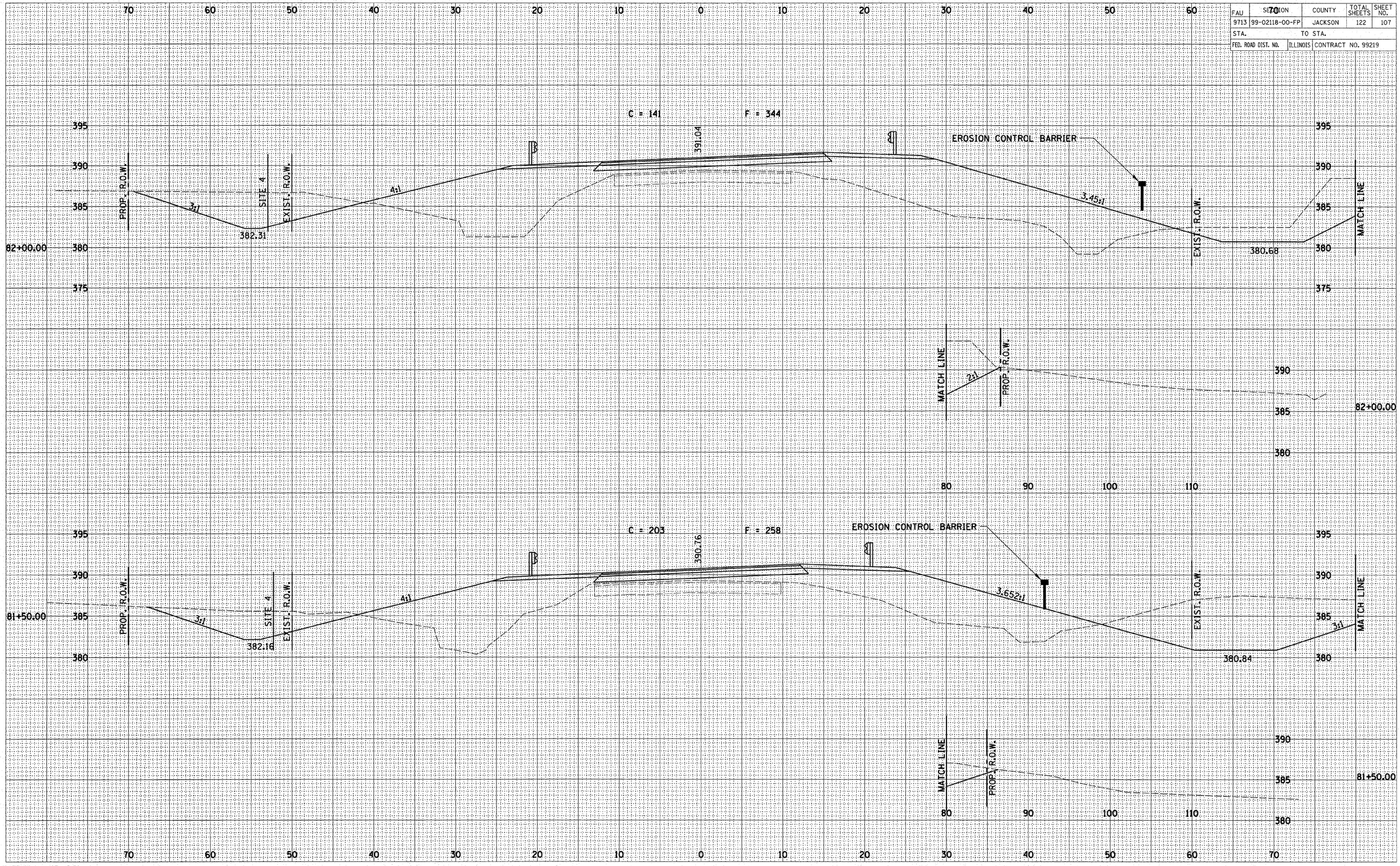


FINAL SURVEY: SURVEYED, PLOTTED, TEMPLATE, AREAS, AREAS CHECKED, NOTE BOOK NO., BY, DATE

ORIGINAL SURVEY: SURVEYED, PLOTTED, TEMPLATE, AREAS, AREAS CHECKED, NOTE BOOK NO., BY, DATE

DATE: 20-Mar-07 10:30
FILE: P:\03\0347000I\Cad\Phase II\4700Ixs.dgn

| FAU | SECTION | COUNTY | TOTAL SHEETS | SHEET NO. |
|---|---|---|---|---|
| 9713 | 99-02118-00-FP | JACKSON | 122 | 108 |
| STA. | TO STA. | | | |
| FED. ROAD DIST. NO. | ILLINOIS | CONTRACT NO. 99219 | | |

FINAL SURVEY

| NO. | NOTE BOOK | SURVEYED | PLOTTED | DRAWN | AREAS | AREAS CHECKED | BY | DATE |
|---|---|---|---|---|---|---|---|---|
| | | | | | | | | |

C = 34 F = 524

WETLANDS SITE 5

PROP. R.O.W.

WETLAND

EXIST. R.O.W.

4.01:1

392.52

EROSION CONTROL BARRIER

4.057:1

EXIST. R.O.W.

MATCH LINE

83+00.00

MATCH LINE

3.043:1

380.36

PROP. R.O.W.

C = 119 F = 391

391.64

SITE 4

PROP. R.O.W.

EXIST. R.O.W.

4:1

3.7:1

EROSION CONTROL BARRIER

EXIST. R.O.W.

380.92

MATCH LINE

82+50.00

MATCH LINE

3.015:1

PROP. R.O.W.

ORIGINAL SURVEY

| NO. | NOTE BOOK | SURVEYED | PLOTTED | DRAWN | AREAS | AREAS CHECKED | BY | DATE |
|---|---|---|---|---|---|---|---|---|
| | | | | | | | | |

DATE: 20-Mar-07 10:30
FILE: P:\03\0347000I\Cad\Phase II\4700ixs.dgn

| FAU | SECTION | COUNTY | TOTAL SHEETS | SHEET NO. |
|---|---|---|---|---|
| 9713 | 99-02118-00-FP | JACKSON | 122 | 109 |
| STA. | TO STA. | | | |
| FED. ROAD DIST. NO. | ILLINOIS | CONTRACT NO. 99219 | | |

| FINAL SURVEY | BY | DATE |
|---|---|---|
| NOTE BOOK | SURVEYED | |
| NO. | PLOTTED | |
| | CHECKED | |
| | AREAS | |
| | AREAS CHECKED | |

| ORIGINAL SURVEY | BY | DATE |
|---|---|---|
| NOTE BOOK | SURVEYED | |
| NO. | PLOTTED | |
| | CHECKED | |
| | AREAS | |
| | AREAS CHECKED | |

STA. 84+00 PLEASANT HILL ROAD =
EARTHWORK MATCH LINE GAINT CITY ROAD

C = 38 F = 720

394.40

WETLAND

WETLANDS SITE 5

5.927:1

4.733:1

EROSION CONTROL BARRIER

MATCH LINE

3.550:1

380.05

PROP. R.O.W.

C = 35 F = 527

393.46

WETLANDS SITE 5

WETLAND

EXIST. R.O.W.

PROP. R.O.W.

4.068:1

EROSION CONTROL BARRIER

4:1

MATCH LINE

3:1

380.20

DATE: 20-Mar-07 10:30
FILE: P:\03\0347000l\Cad\Phase II\4700lxs.dgn

| FAU | SECTION | COUNTY | TOTAL SHEETS | SHEET NO. |
|---|---|---|---|---|
| 9713 | 99-02118-00-FP | JACKSON | 122 | 110 |
| STA. | | TO STA. | | |
| FED. ROAD DIST. NO. | ILLINOIS | CONTRACT NO. 99219 | | |

FINAL SURVEY
NOTE BOOK
NO.
SURVEYED
PLOTTED
DRAWN
AREAS
AREAS CHECKED
BY
DATE

ORIGINAL SURVEY
NOTE BOOK
NO.
SURVEYED
PLOTTED
DRAWN
AREAS
AREAS CHECKED
BY
DATE

301+00.00
300+50.00
300+37.88
300+00.00
EXIST. R.O.W.
PROP. R.O.W.
TEMP. EASEMENT
PROP. R.O.W. 50' RT.
PROP. R.O.W. 102.93' RT.
MATCH LINE
F = 0
C = 191
C = 267
C = 329
438.41
436.34
436.01
WATER
GAS
WARREN ROAD

DATE: 20-Mar-07 11:39
FILE: P:\03\0347000\Cad\Phase II\4700lwarrenxs.dgn

| FAU | SECTION | COUNTY | TOTAL SHEETS | SHEET NO. |
|---|---|---|---|---|
| 9713 | 99-02118-00-FP | JACKSON | 122 | 111 |
| STA. | | TO STA. | | |
| FED. ROAD DIST. NO. | ILLINOIS | CONTRACT NO. 99219 | | |

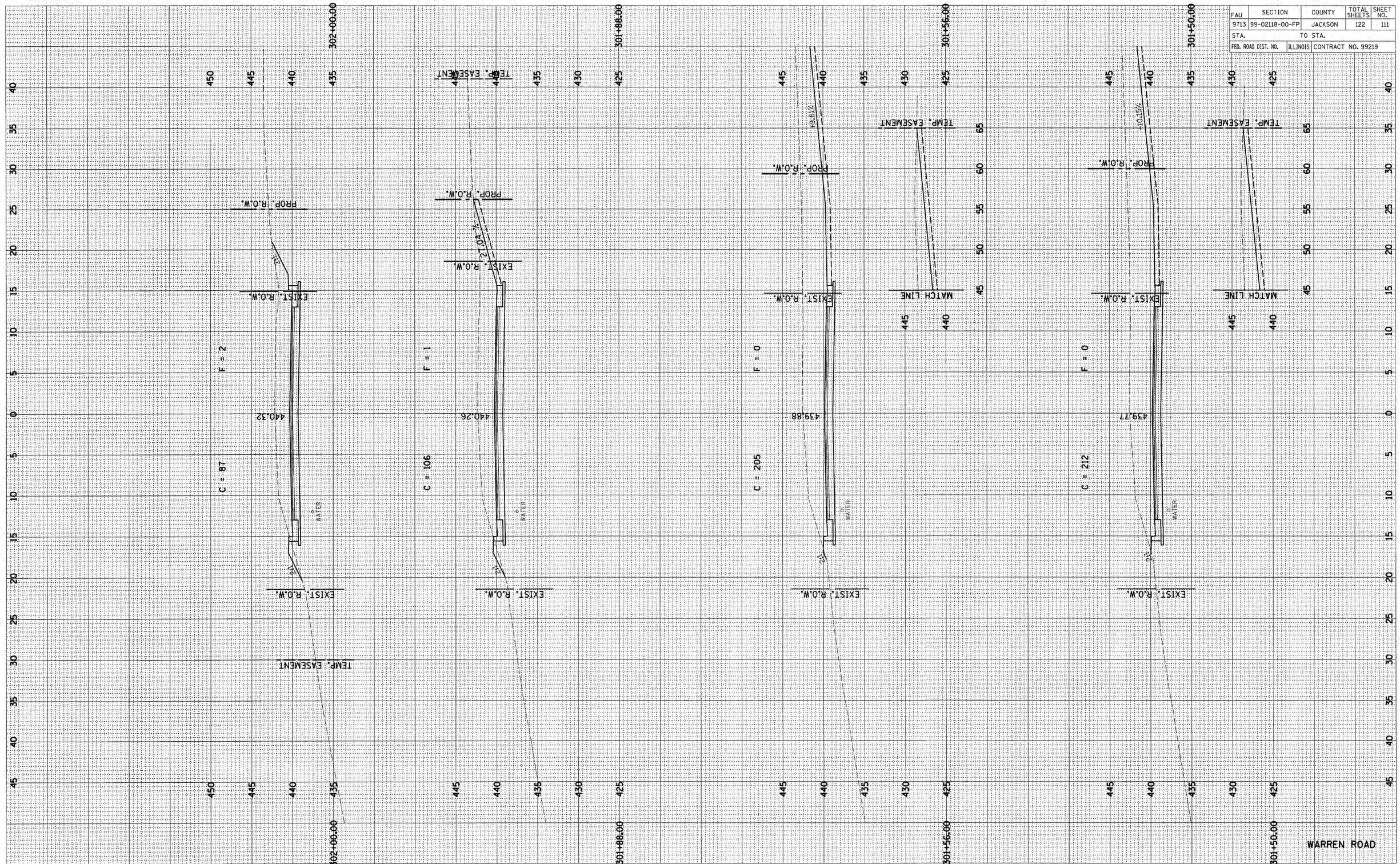


FINAL SURVEY
NOTE BOOK NO.
SURVEYED
PLOTTED
TEMPLATE
AREAS
AREAS CHECKED
BY
DATE

ORIGINAL SURVEY
NOTE BOOK NO.
SURVEYED
PLOTTED
TEMPLATE
AREAS
AREAS CHECKED
BY
DATE

DATE: 20-Mar-07 11:39
FILE: P:\03\0347000I\Cad\Phase II\4700Iwarrenxs.dgn

| FAU | SECTION | COUNTY | TOTAL SHEETS | SHEET NO. |
|---|---|---|---|---|
| 9713 | 99-02118-00-FP | JACKSON | 122 | 112 |
| STA. | TO STA. | | | |
| FED. ROAD DIST. NO. | ILLINOIS | CONTRACT NO. 99219 | | |

FINAL SURVEY
NOTE BOOK
NO.
SURVEYED
PLOTTED
TYPED
AREAS
AREAS CHECKED
BY
DATE

ORIGINAL SURVEY
NOTE BOOK
NO.
SURVEYED
PLOTTED
TYPED
AREAS
AREAS CHECKED
BY
DATE

END CONSTRUCTION STATION 303+60.00

F = 22
C = 23
437.16
EXIST. R.O.W.
PROP. R.O.W.
EXIST. R.O.W.
WATER
TEMP. EASEMENT

F = 12
C = 39
439.02
EXIST. R.O.W.
PROP. R.O.W.
EXIST. R.O.W.
WATER
TEMP. EASEMENT

F = 9
C = 53
440.07
EXIST. R.O.W.
PROP. R.O.W.
EXIST. R.O.W.
WATER
TEMP. EASEMENT

304+00.00 303+50.00 303+00.00 302+50.00

WARREN ROAD

DATE: 20-Mar-07 11:39
FILE: P:\03\0347000\Cad\Phase II\4700lwarrenxs.dgn

| FAU | SECTION | COUNTY | TOTAL SHEETS | SHEET NO. |
|---|---|---|---|---|
| 9713 | 99-02118-00-FP | JACKSON | 122 | 113 |
| STA. | | TO STA. | | |
| FED. ROAD DIST. NO. | ILLINOIS | CONTRACT NO. 99219 | | |

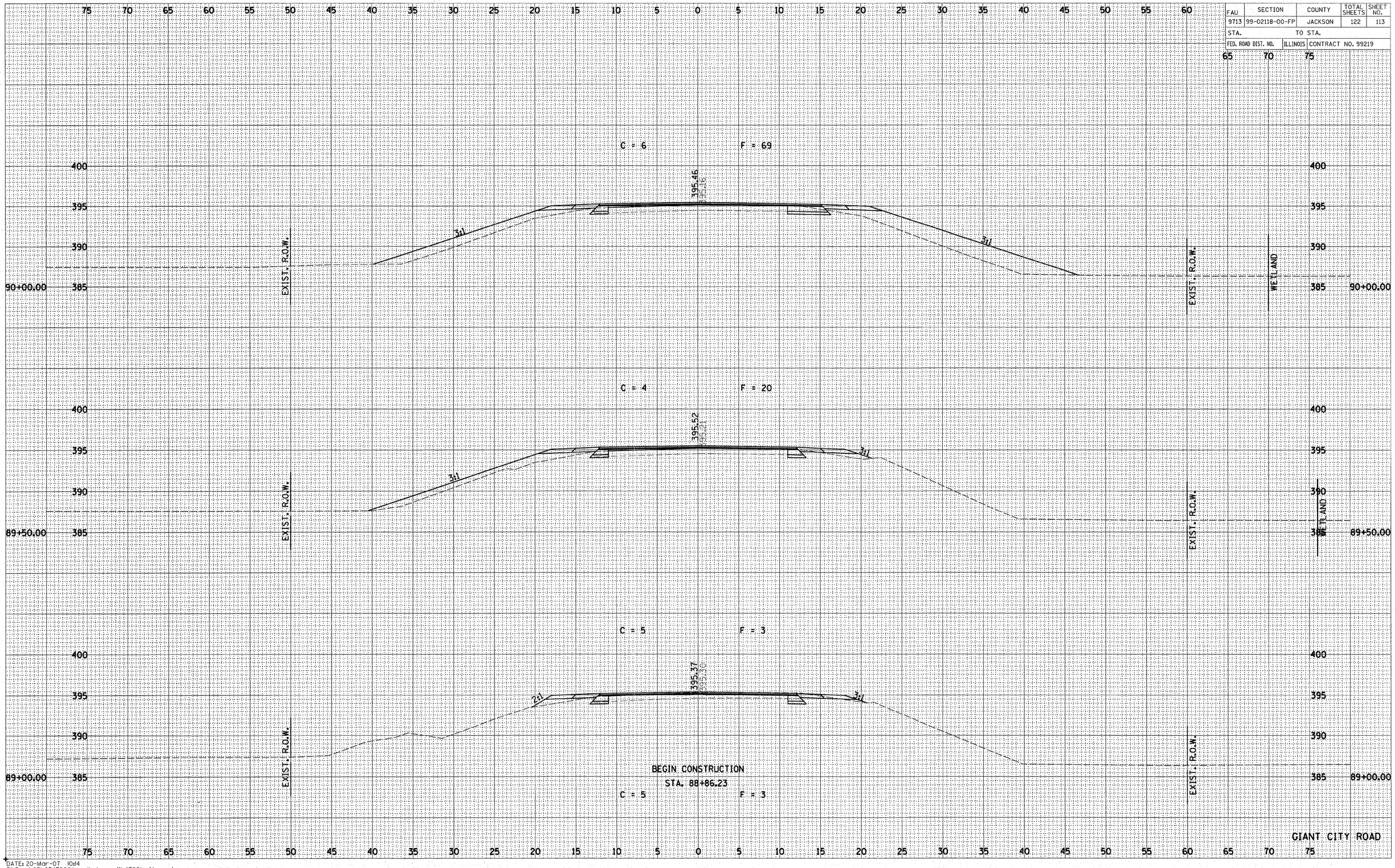


FINAL SURVEY
NOTE BOOK NO.
SURVEYED
PLOTTED
TEMPLATE
AREAS
AREAS CHECKED
BY
DATE

ORIGINAL SURVEY
NOTE BOOK NO.
SURVEYED
PLOTTED
TEMPLATE
AREAS
AREAS CHECKED
BY
DATE

DATE: 20-Mar-07 10:14
FILE: p:\03\0347000l\cad\phase 11\4700lgcityxs.dgn

| FAU | SECTION | COUNTY | TOTAL SHEETS | SHEET NO. |
|---|---|---|---|---|
| 9713 | 99-02118-00-FP | JACKSON | 122 | 114 |
| STA. | | TO STA. | | |
| FED. ROAD DIST. NO. | ILLINOIS | CONTRACT NO. 99219 | | |

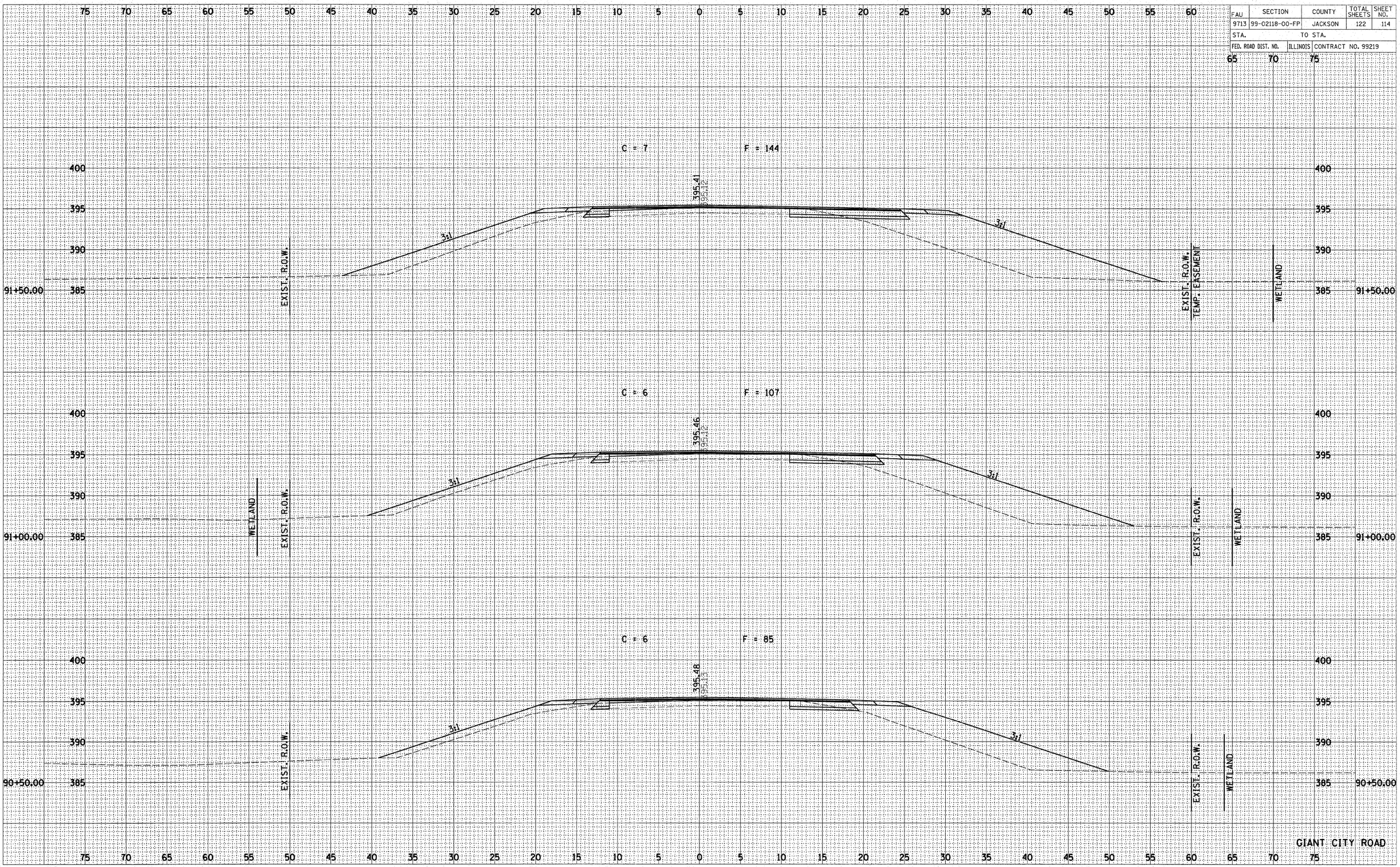


FINAL SURVEY — NOTE BOOK NO. — SURVEYED — PLOTTED — TEMPLATE — AREAS — AREAS CHECKED — BY — DATE

ORIGINAL SURVEY — NOTE BOOK NO. — SURVEYED — PLOTTED — TEMPLATE — AREAS — AREAS CHECKED — BY — DATE

DATE: 20-Mar-07 10:14
FILE: p:\03\0347000l\cad\phase II\4700lgcityxs.dgn

| FAU | SECTION | COUNTY | TOTAL SHEETS | SHEET NO. |
|---|---|---|---|---|
| 9713 | 99-02118-00-FP | JACKSON | 122 | 115 |
| STA. | | TO STA. | | |
| FED. ROAD DIST. NO. | ILLINOIS | CONTRACT NO. 99219 | | |

FINAL SURVEY
NOTE BOOK
NO.
SURVEYED
PLOTTED
PLANIMETER
AREAS
AREAS CHECKED
BY
DATE

ORIGINAL SURVEY
NOTE BOOK
NO.
SURVEYED
PLOTTED
PLANIMETER
AREAS
AREAS CHECKED
BY
DATE

93+00.00

C = 9 F = 194

395.36
395.09

EXIST. R.O.W. 3:1 3:1 WETLAND EXIST. R.O.W. TEMP. EASEMENT

92+50.00

C = 8 F = 187

395.35
395.08

EXIST. R.O.W. 3:1 3:1 EXIST. R.O.W. WETLAND TEMP. EASEMENT

92+00.00

C = 7 F = 173

395.38
395.11

EXIST. R.O.W. 3:1 3:1 EXIST. R.O.W. TEMP. EASEMENT WETLAND

GIANT CITY ROAD

DATE: 20-Mar-07 10:14
FILE: p:\03\0347000\cad\phase II\4700lgcityxs.dgn

| FAU | SECTION | COUNTY | TOTAL SHEETS | SHEET NO. |
|---|---|---|---|---|
| 9713 | 99-02118-00-FP | JACKSON | 122 | 116 |
| STA. | | TO STA. | | |
| FED. ROAD DIST. NO. | ILLINOIS | CONTRACT NO. 99219 | | |

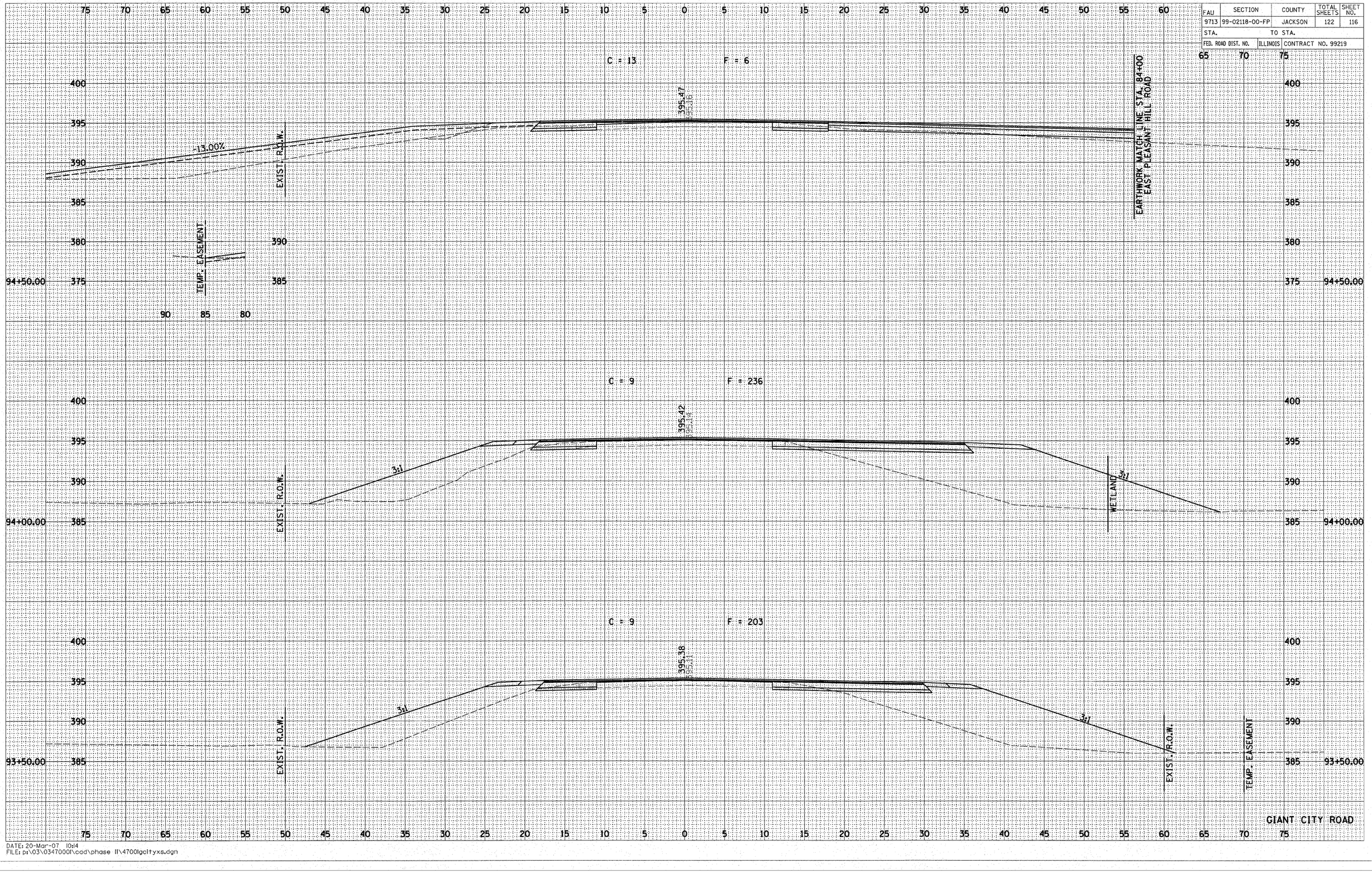


FINAL SURVEY
NOTE BOOK NO.
SURVEYED
PLOTTED
TEMPLATE
AREAS
AREAS CHECKED
BY
DATE

ORIGINAL SURVEY
NOTE BOOK NO.
SURVEYED
PLOTTED
TEMPLATE
AREAS
AREAS CHECKED
BY
DATE

DATE: 20-Mar-07 10:14
FILE: p:\03\03470001\cad\phase II\47001gcityxs.dgn

| FAU | SECTION | COUNTY | TOTAL SHEETS | SHEET NO. |
|---|---|---|---|---|
| 9713 | 99-02118-00-FP | JACKSON | 122 | 117 |
| STA. | TO STA. | | | |
| FED. ROAD DIST. NO. | ILLINOIS | CONTRACT NO. 99219 | | |

FINAL SURVEY
NOTE BOOK
NO.
SURVEYED
PLOTTED
TYPED
AREAS
AREAS CHECKED
BY
DATE

ORIGINAL SURVEY
NOTE BOOK
NO.
SURVEYED
PLOTTED
TYPED
AREAS
AREAS CHECKED
BY
DATE

C = 13 F = 194

395.41
395.04

3pl

EXIST. R.O.W.

EARTHWORK MATCH LINE STA. 84+00
EAST PLEASANT HILL ROAD

95+00.00

C = 19 F = 3

95.46
95.08

-12.70%

EXIST. R.O.W.

TEMP. EASEMENT

MATCH LINE

EARTHWORK MATCH LINE STA. 84+00
EAST PLEASANT HILL ROAD

94+54.20

GIANT CITY ROAD

DATE: 20-Mar-07 10:14
FILE: p:\03\0347000\cad\phase II\4700lgcltyxs.dgn

| FAU | SECTION | COUNTY | TOTAL SHEETS | SHEET NO. |
|---|---|---|---|---|
| 9713 | 99-02118-00-FP | JACKSON | 122 | 118 |
| STA. | TO STA. | | | |
| FED. ROAD DIST. NO. | ILLINOIS | CONTRACT NO. 99219 | | |

FINAL SURVEY — NOTE BOOK — NO. — SURVEYED — PLOTTED — TEMPLATE — AREAS — AREAS CHECKED — BY — DATE

ORIGINAL SURVEY — NOTE BOOK — NO. — SURVEYED — PLOTTED — TEMPLATE — AREAS — AREAS CHECKED — BY — DATE

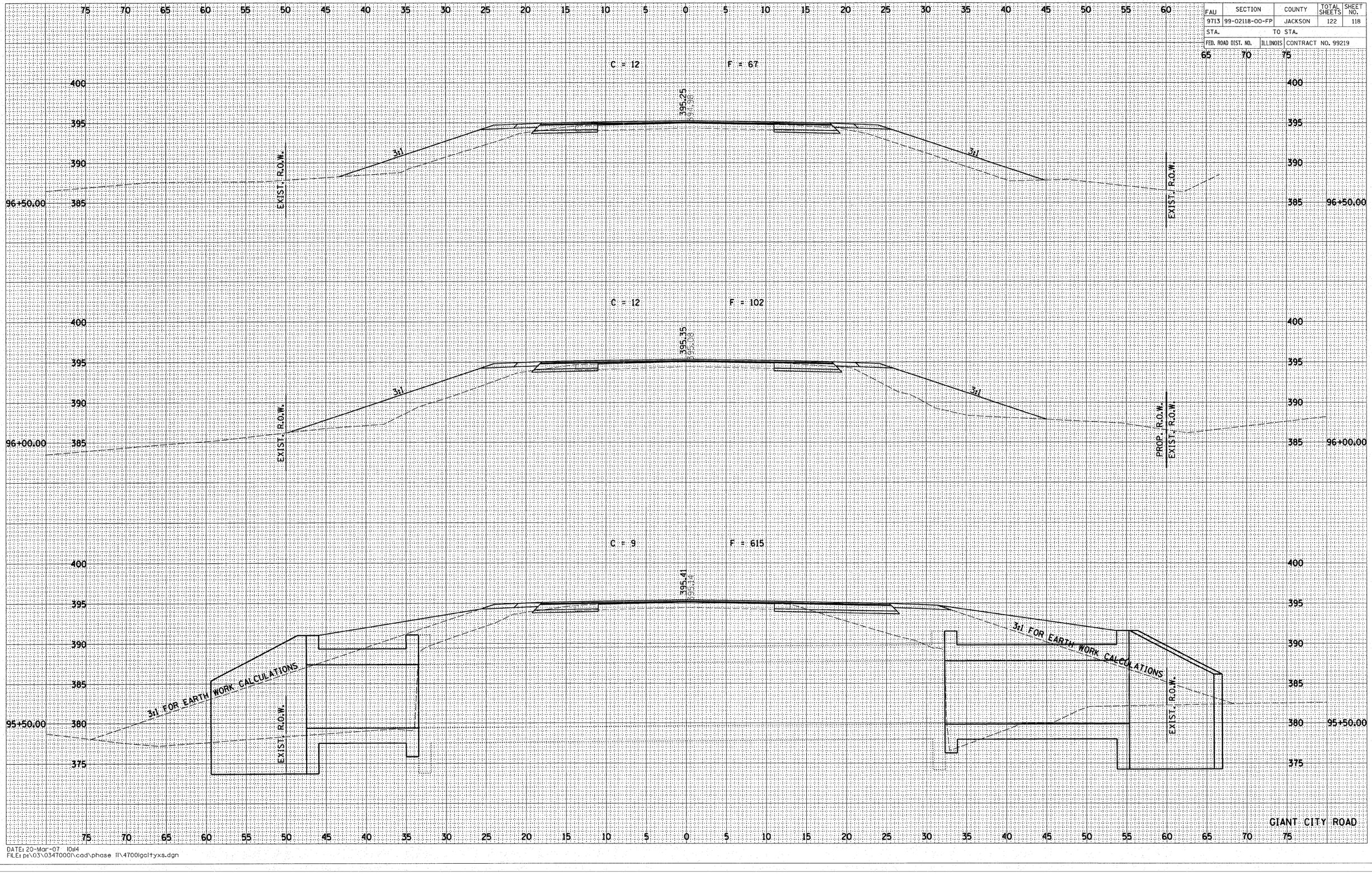


GIANT CITY ROAD

DATE: 20-Mar-07 10:14
FILE: p:\03\0347000l\cad\phase II\4700lgcltyxs.dgn

| FAU | SECTION | COUNTY | TOTAL SHEETS | SHEET NO. |
|---|---|---|---|---|
| 9713 | 99-02118-00-FP | JACKSON | 122 | 119 |
| STA. | | TO STA. | | |
| FED. ROAD DIST. NO. | ILLINOIS | CONTRACT NO. 99219 | | |

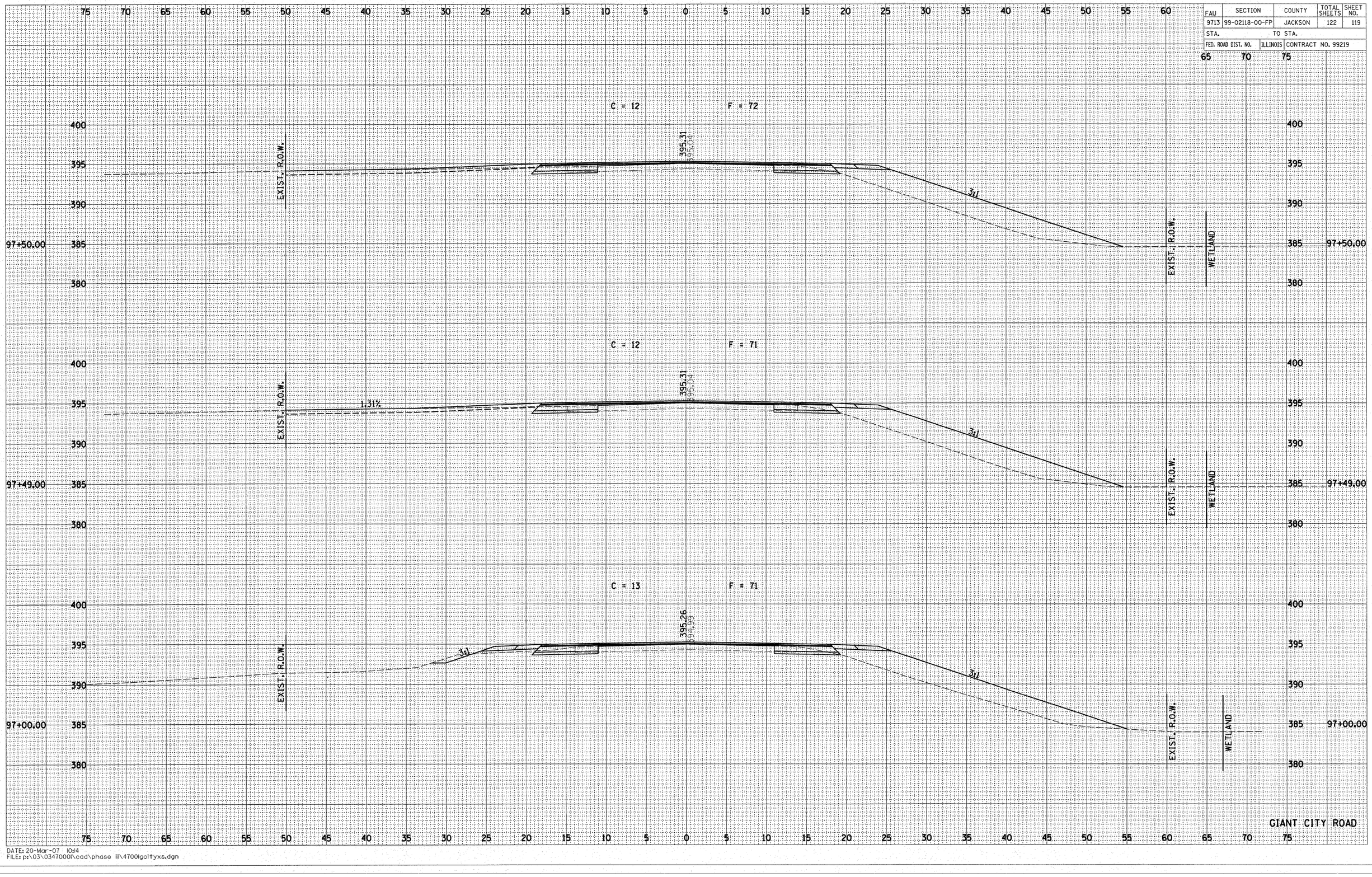


FINAL SURVEY
NOTE BOOK NO.
SURVEYED
PLOTTED
TEMPLATE
AREAS
AREAS CHECKED
BY
DATE

ORIGINAL SURVEY
NOTE BOOK NO.
SURVEYED
PLOTTED
TEMPLATE
AREAS
AREAS CHECKED
BY
DATE

DATE: 20-Mar-07 10:14
FILE: p:\03\0347000l\cad\phase ii\4700lgcltyxs.dgn

| FAU | SECTION | COUNTY | TOTAL SHEETS | SHEET NO. |
|---|---|---|---|---|
| 9713 | 99-02118-00-FP | JACKSON | 122 | 120 |
| STA. | | TO STA. | | |
| FED. ROAD DIST. NO. | ILLINOIS | CONTRACT NO. 99219 | | |

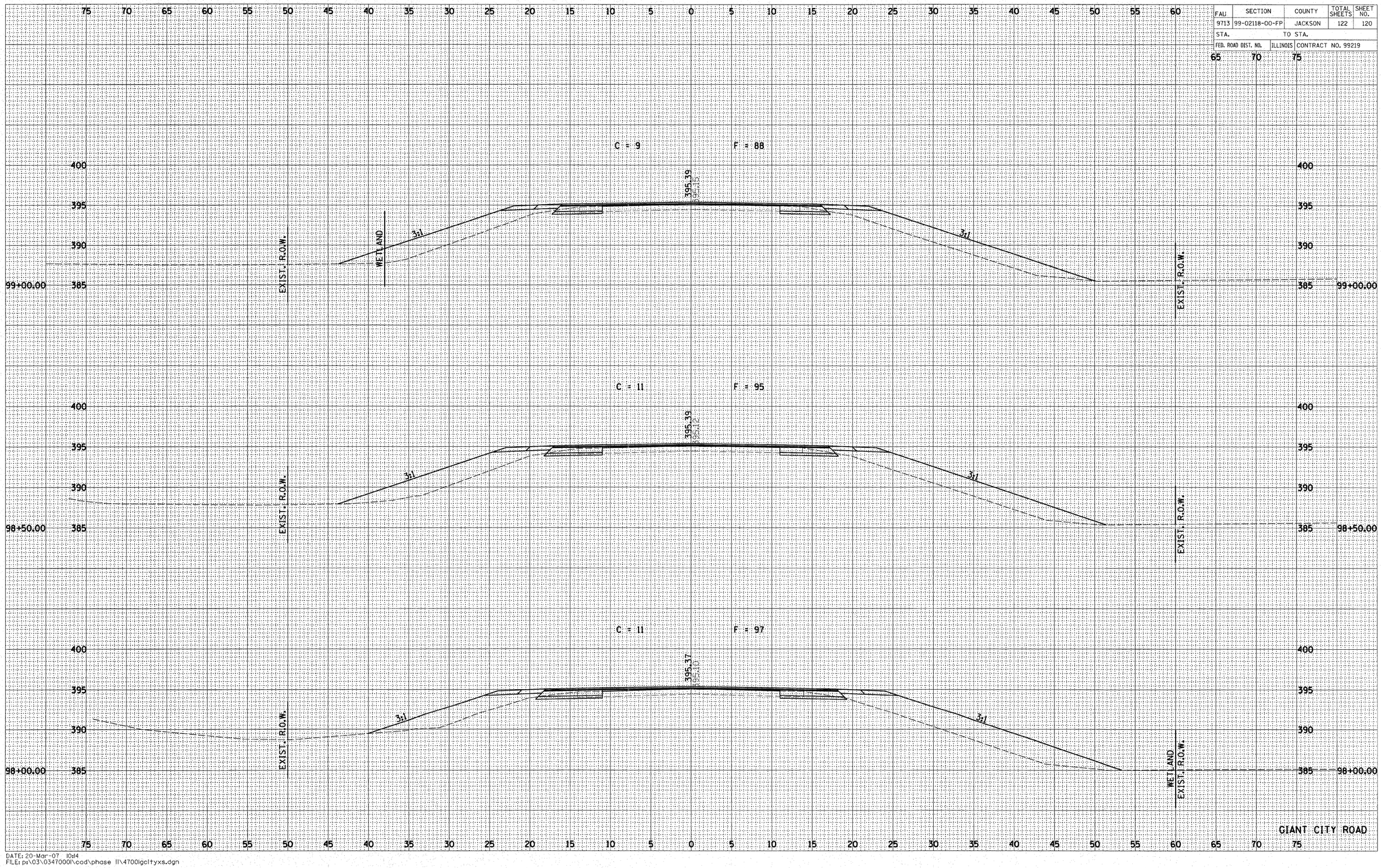


FINAL SURVEY — NOTE BOOK NO. — SURVEYED — PLOTTED — TEMPLATE — AREAS — AREAS CHECKED — BY — DATE

ORIGINAL SURVEY — NOTE BOOK NO. — SURVEYED — PLOTTED — TEMPLATE — AREAS — AREAS CHECKED — BY — DATE

DATE: 20-Mar-07 10:14
FILE: p:\03\03470001\cad\phase 11\4700lgcltyxs.dgn

| FAU | SECTION | COUNTY | TOTAL SHEETS | SHEET NO. |
|---|---|---|---|---|
| 9713 | 99-02118-00-FP | JACKSON | 122 | 121 |
| STA. | | TO STA. | | |
| FED. ROAD DIST. NO. | ILLINOIS | CONTRACT NO. 99219 | | |

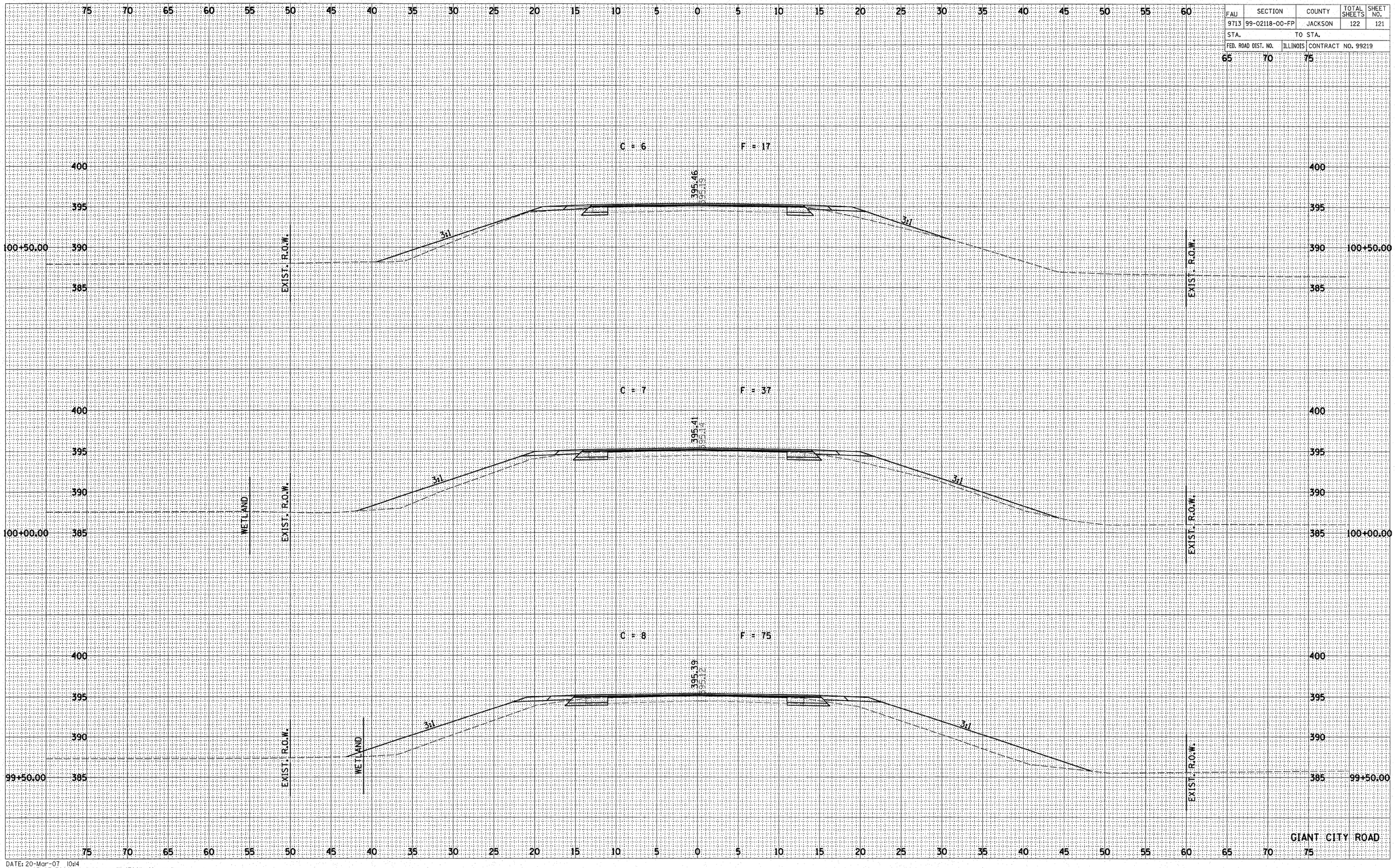


FINAL SURVEY
NOTE BOOK NO.
SURVEYED
PLOTTED
TEMPLATE
AREAS
AREAS CHECKED
BY
DATE

ORIGINAL SURVEY
NOTE BOOK NO.
SURVEYED
PLOTTED
TEMPLATE
AREAS
AREAS CHECKED
BY
DATE

DATE: 20-Mar-07 10:14
FILE: p:\03\0347000l\cad\phase II\4700lgcltyxs.dgn

| FAU | SECTION | COUNTY | TOTAL SHEETS | SHEET NO. |
|---|---|---|---|---|
| 9713 | 99-02118-00-FP | JACKSON | 122 | 122 |
| STA. | | TO STA. | | |
| FED. ROAD DIST. NO. | ILLINOIS | CONTRACT NO. 99219 | | |

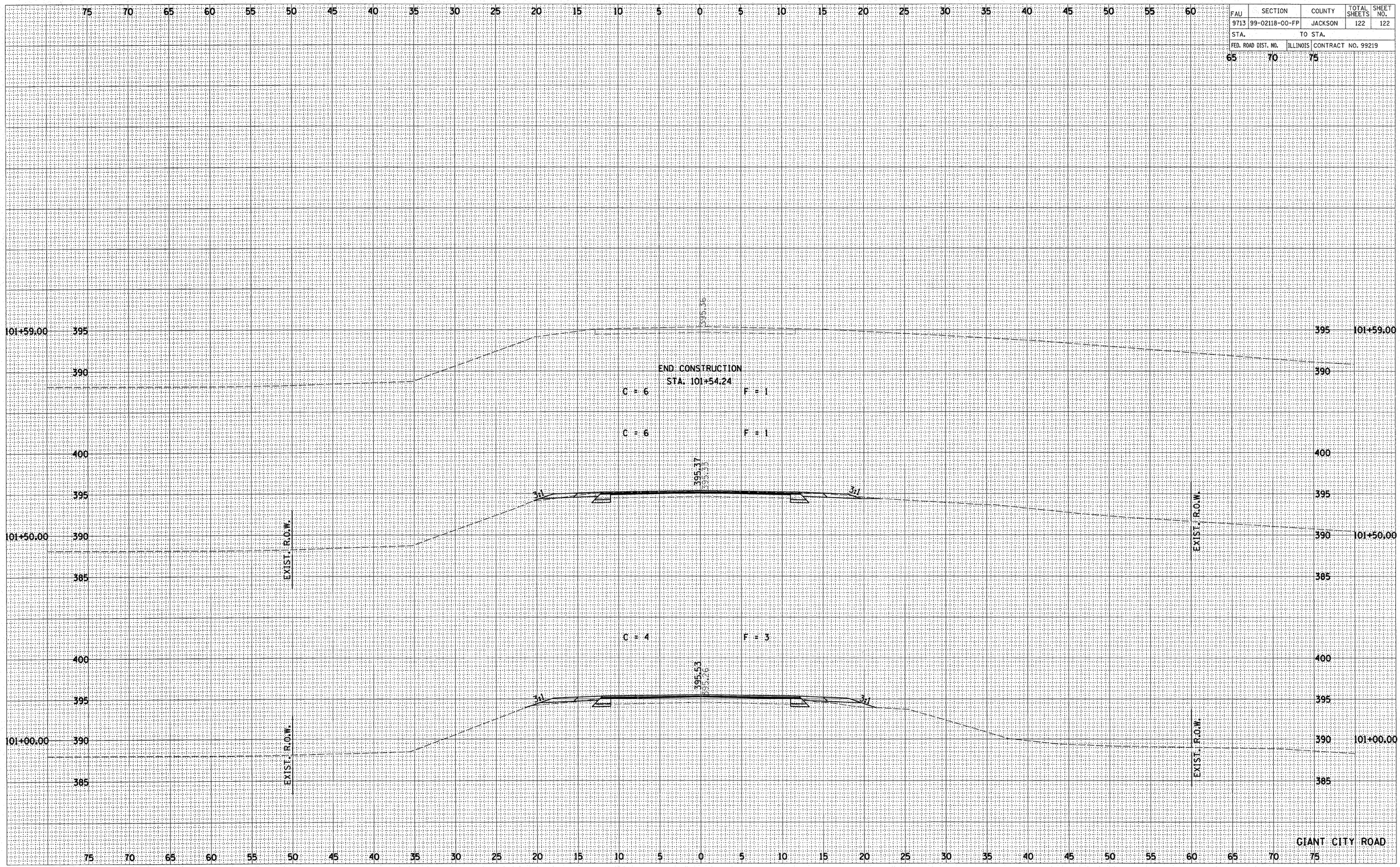


FINAL SURVEY
NOTE BOOK NO.
SURVEYED
PLOTTED
TEMPLATE
AREAS
AREAS CHECKED
BY
DATE

ORIGINAL SURVEY
NOTE BOOK NO.
SURVEYED
PLOTTED
TEMPLATE
AREAS
AREAS CHECKED
BY
DATE

DATE: 20-Mar-07 10:14
FILE: p:\03\0347000l\cad\phase II\4700lgcityxs.dgn