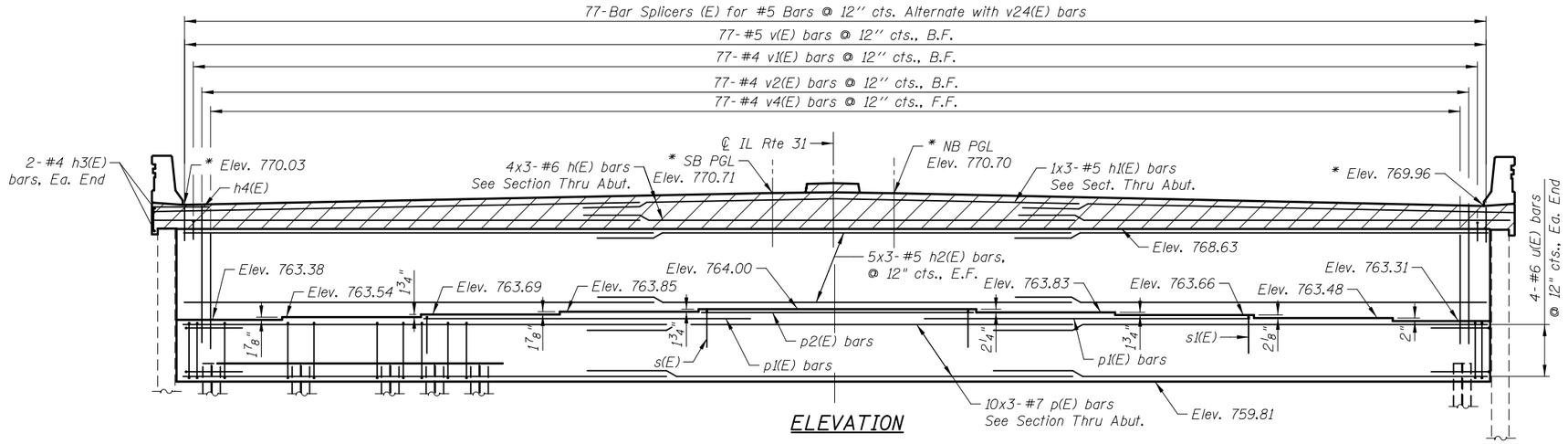

ELEVATION

* Elevations given at F.F. of backwall

PILE DATA

Type: Steel HP 14x73
Nominal Required Bearing: 400 kips
Factored Resistance Available: 220 kips
Est. Length: 83 feet
No. Production Piles: 25
No. Test Piles: 1

MINIMUM BAR LAP

#5 bar = 3'-8''
#6 bar = 4'-5"
#7 bar = 5'-10"

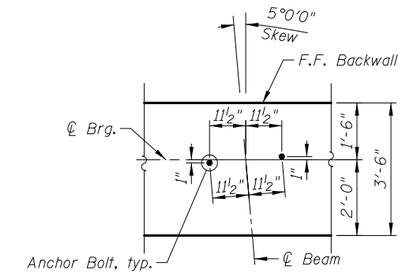

ANCHOR BOLT DIAGRAM

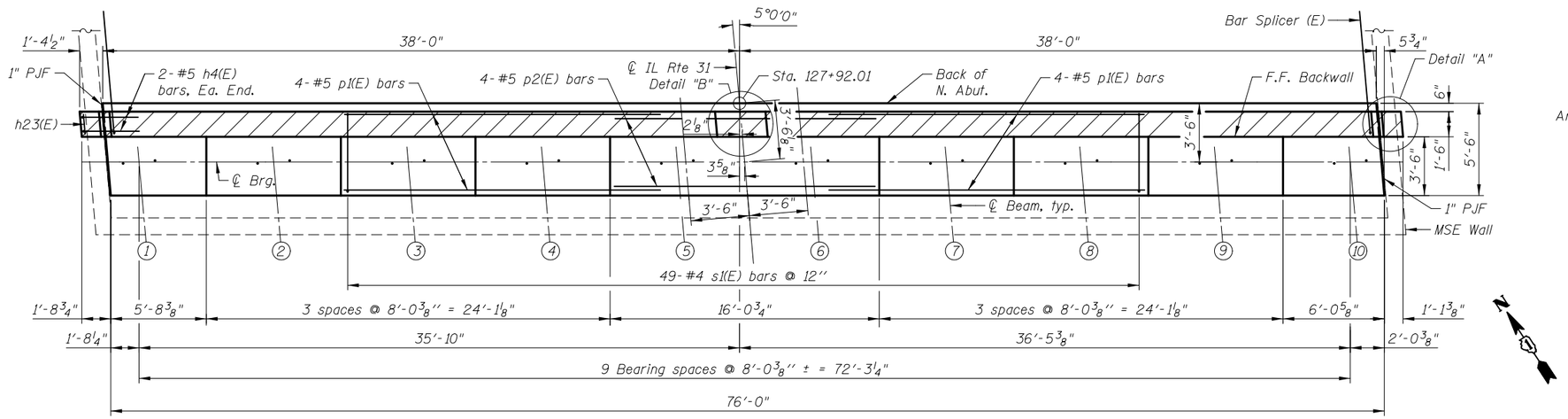

TOP VIEW

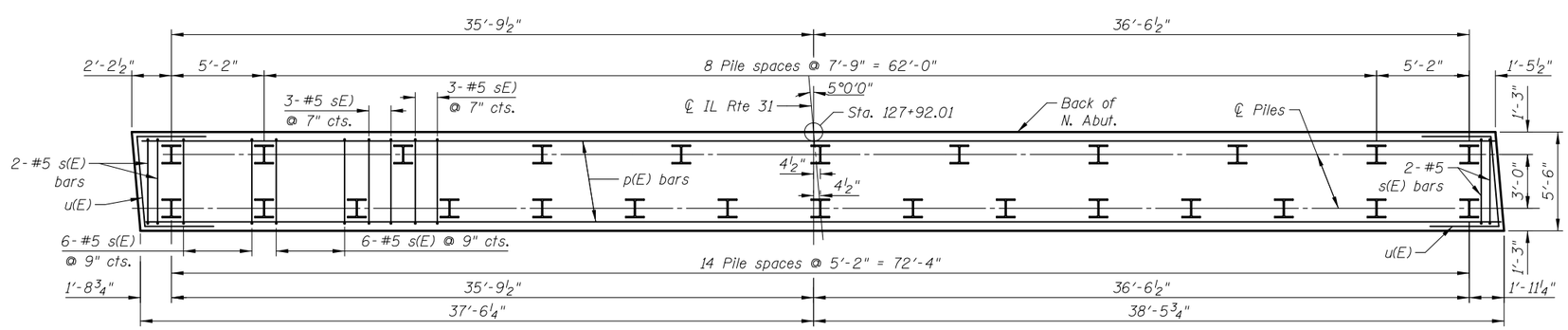

PLAN-PILE CAP

Hatched area to be poured after superstructure false work has been removed.

Parapets to be poured with the Approach Slabs.

See Sheet SA23 for Details A & B and Bill of Material.

CIVILTECH
450 E Devon Ave, Suite 300
Itasca, Illinois 60143
Tel: 630.773.3900 Fax: 630.773.3975
www.civiltechinc.com

DRAWN	- M. LANGE	REVISED	-
DESIGNED	- D. ATKINS	REVISED	-
CHECKED	- G. HATLESTAD	REVISED	-
DATE	- 5/3/2012	REVISED	-

STATE OF ILLINOIS
DEPARTMENT OF TRANSPORTATION

NORTH ABUTMENT
ILLINOIS ROUTE 31 OVER CRYSTAL CREEK
STRUCTURE NO. 056-0077
SHEET NO. SA22 OF SA33 SHEETS

O.R. RTE.	SECTION	COUNTY	TOTAL SHEETS	SHEET NO.
0003	18A-2	MCHENRY	825	482

CONTRACT NO. 60F72
ILLINOIS FED. AID PROJECT

J:\2154\cad\sheet\Roadway\20-Structures & Walls\01.SN 056-0077\056007T-60F72-22-NAB.dgn 4:16:44 PM
klb 5/2/2012