NOTES FOR TEMPORARY TRAFFIC SIGNALS:

1. ALL CONTROL EQUIPMENT INCLUDING EMERGENCY PRE-EMPTION AND COMMUNICATION DEVICES FOR THE TEMPORARY TRAFFIC SIGNAL(S) SHALL BE FURNISHED BY THE CONTRACTOR.
2. ONLY CONTROLLERS SUPPLIED BY ONE OF THE DISTRICT APPROVED CLOSED LOOP EQUIPMENT MANUFACTURERS WILL BE APPROVED FOR USE AT TEMPORARY SIGNAL LOCATIONS. ALL CONTROLLERS USED FOR TEMPORARY TRAFFIC SIGNALS SHALL BE FULLY ACTUATED NEMA MICROPROCESSOR BASED WITH RS232 DATA ENTRY PORTS COMPATIBLE WITH EXISTING MONITORING SOFTWARE APPROVED BY IDOT DISTRICT 1, INSTALLED IN A NEMA TS2 CABINET. ONLY ONE BRAND OF CONTROLLER WILL BE ACCEPTED FOR ANY ONE CONTRACT.
3. ALL TRAFFIC SIGNAL SECTIONS AND PEDESTRIAN SIGNAL SECTIONS SHALL BE LED AND 12" (300mm) DIAMETER. HEADS SHALL BE PLACED AS INDICATED ON THE TEMPORARY TRAFFIC SIGNAL PLAN OR AS DIRECTED BY THE ENGINEER. PEDESTRIAN SIGNALS SHALL INCLUDE SOLID INTERNATIONAL SYMBOLS. PEDESTRIAN SIGNALS WITH COUNTDOWN TIMERS SHALL BE USED WHEN THE EXISTING INSTALLATION UTILIZES COUNTDOWN TYPE OR AS DIRECTED BY THE ENGINEER. COUNTDOWN TYPE PEDESTRIAN SIGNALS ARE NOT TO BE INSTALLED AT A RAILROAD INTERSECTION. THE CONTRACTOR SHALL FURNISH ENOUGH CABLE SLACK TO RELOCATE HEADS TO ANY POSITION ON THE SPAN WIRE OR AT LOCATIONS ILLUSTRATED ON THE PLANS FOR CONSTRUCTION STAGING. THE TEMPORARY TRAFFIC SIGNAL SHALL REMAIN IN OPERATION DURING ALL SIGNAL HEAD RELOCATIONS. EACH TEMPORARY TRAFFIC SIGNAL HEAD SHALL HAVE ITS OWN CABLE FROM THE CONTROLLER CABINET TO THE SIGNAL HEAD.
4. ALL EXISTING STREET NAME AND INTERSECTION REGULATORY SIGNS SHALL BE REMOVED FROM EXISTING POLES, RELOCATED AND SECURELY FASTENED TO THE SPAN WIRE OR WOOD POLE AS DIRECTED BY THE ENGINEER.
5. ANY TEMPORARY SIGNAL WITHIN AN EXISTING CLOSED LOOP TRAFFIC SIGNAL SYSTEM SHALL BE INTERCONNECTED TO THAT SYSTEM USING SIMILAR BRAND CONTROLLER EQUIPMENT.
6. THE TEMPORARY TRAFFIC SIGNAL SHALL HAVE THE SIGNAL HEAD DISPLAYS, SIGNAL HEAD PLACEMENTS AND CONTROLLER PHASING MATCH THE EXISTING TRAFFIC SIGNAL, AT THE TIME OF THE TURN ON, IF NO TRAFFIC STAGING IS IN PLACE OR WILL NOT BE STAGED ON THE DAY OF THE TURN ON.
7. UNINTERRUPTIBLE POWER SUPPLY (UPS) SYSTEMS SHALL BE INSTALLED AND MADE OPERATIONAL AT TEMPORARY TRAFFIC SIGNAL INSTALLATIONS WHERE UPS IS INSTALLED AT THE EXISTING TRAFFIC SIGNAL, TEMPORARY TRAFFIC SIGNALS AT RAILROAD INTERSECTIONS, AND TEMPORARY TRAFFIC SIGNALS AT INTERSECTIONS WITH FIRE STATION ACTUATED EMERGENCY VEHICLE PRE-EMPTION, OR WHEN INDICATED ON THE PLANS.
8. TRAFFIC SIGNAL MANAGEMENT SYSTEMS SHALL BE MAINTAINED IN OPERATION AS INDICATED ON THE PLANS OR AS DIRECTED BY THE ENGINEER. REQUIRED EQUIPMENT SHALL BE AS SHOWN ON THE PLANS AND THE CONTRACTOR SHALL PLACE THE EQUIPMENT IN OPERATION TO THE SATISFACTION OF THE ENGINEER AND THE AGENCY RESPONSIBLE FOR THE TRAFFIC SIGNAL MANAGEMENT SYSTEM.
9. DETECTION AT TEMPORARY TRAFFIC SIGNALS SHALL BE INCLUDED FOR ALL APPROACHES OF THE INTERSECTION UNLESS INDICATED OTHERWISE ON THE PLANS. THE DETECTION SYSTEM MUST MEET THE SPECIFICATIONS OF THE DISTRICT 1 AND THE CONTRACTOR SHALL PLACE THE DETECTORS INTO OPERATION TO THE SATISFACTION OF THE ENGINEER.
10. WHEN PAN, TILT, ZOOM CAMERAS ARE INSTALLED AT THE EXISTING INTERSECTION OR ARE CALLED FOR IN THE PLANS, THE CONTRACTOR SHALL BE RESPONSIBLE FOR INSTALLING AND MAINTAINING THE CAMERAS TO THE SATISFACTION OF THE ENGINEER AND THE AGENCY RESPONSIBLE FOR THE CAMERAS.

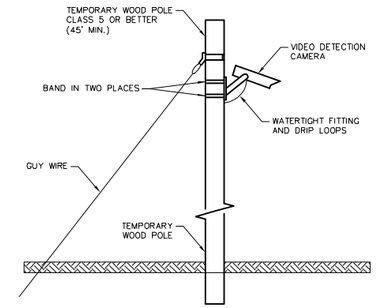

TEMPORARY VIDEO DETECTION MOUNTING DETAIL

(NOT TO SCALE)

N

GRAPHIC SCALE

20 0 10 20

(IN FEET)
1 inch = 20 ft.

CONSTRUCTION NOTES:

1. THE CONTRACTOR SHALL INSTALL THE TEMPORARY PEDESTRIAN SIGNAL HEAD AND PUSH-BUTTON ON A 4"X4" WOOD POST WITH OVERHEAD CABLES FROM THE TEMPORARY WOOD POLE.
2. THE TEMPORARY RADIO INTERCONNECT SHALL BE REMOVED AFTER THE FIBER OPTIC INTERCONNECT TO POTTER ROAD AND THE MEIJER ENTRANCE IS INSTALLED AND OPERATIONAL.
3. REMOVE AND RELOCATE EXISTING LIGHT DETECTORS, CONFIRMATION BEACONS, AND LIGHT DETECTOR AMPLIFIER TO THEIR RESPECTIVE NEW MAST ARMS AND NEW CONTROLLER CABINET.

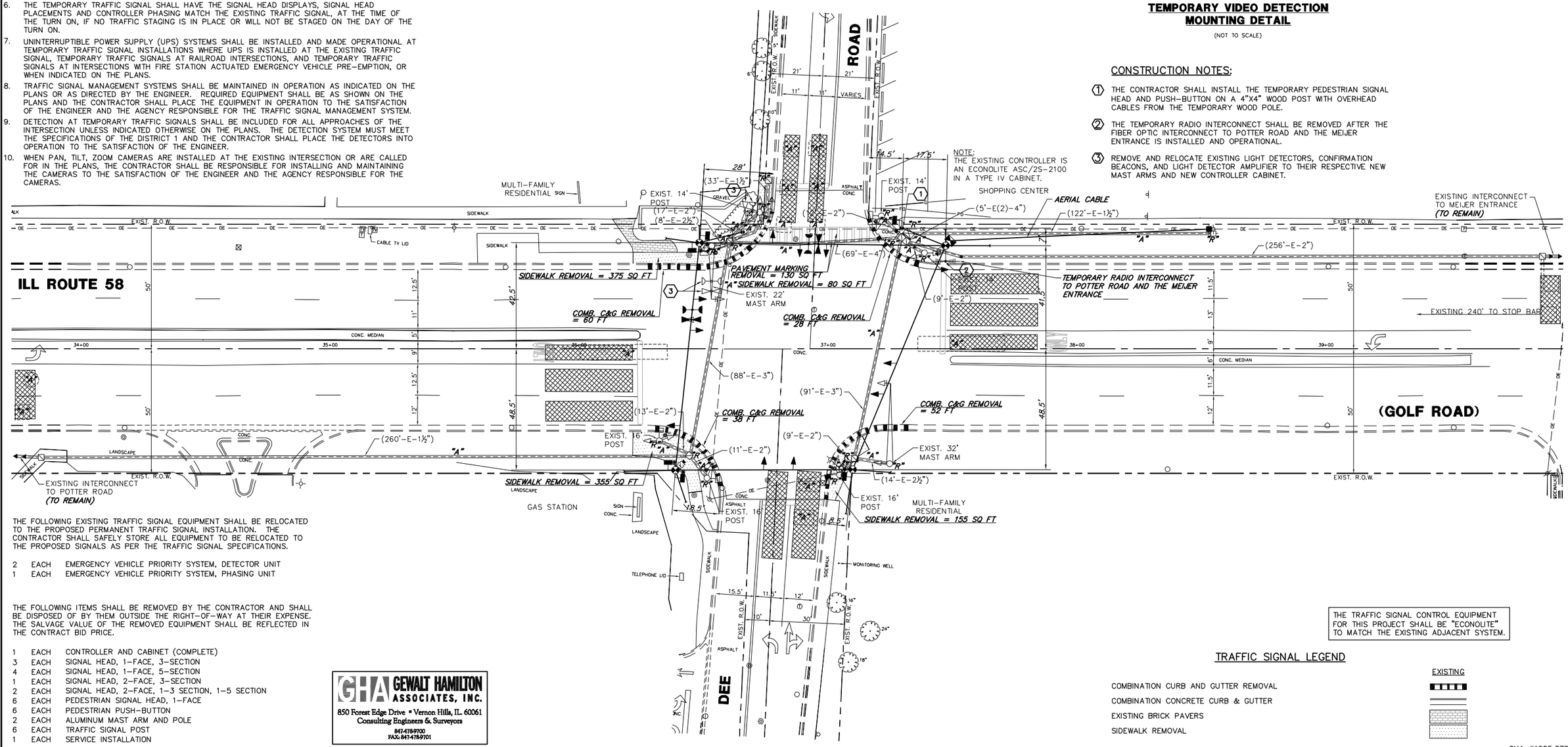

THE FOLLOWING EXISTING TRAFFIC SIGNAL EQUIPMENT SHALL BE RELOCATED TO THE PROPOSED PERMANENT TRAFFIC SIGNAL INSTALLATION. THE CONTRACTOR SHALL SAFELY STORE ALL EQUIPMENT TO BE RELOCATED TO THE PROPOSED SIGNALS AS PER THE TRAFFIC SIGNAL SPECIFICATIONS.

2	EACH	EMERGENCY VEHICLE PRIORITY SYSTEM, DETECTOR UNIT
1	EACH	EMERGENCY VEHICLE PRIORITY SYSTEM, PHASING UNIT

THE FOLLOWING ITEMS SHALL BE REMOVED BY THE CONTRACTOR AND SHALL BE DISPOSED OF BY THEM OUTSIDE THE RIGHT-OF-WAY AT THEIR EXPENSE. THE SALVAGE VALUE OF THE REMOVED EQUIPMENT SHALL BE REFLECTED IN THE CONTRACT BID PRICE.

1	EACH	CONTROLLER AND CABINET (COMPLETE)
3	EACH	SIGNAL HEAD, 1-FACE, 3-SECTION
4	EACH	SIGNAL HEAD, 1-FACE, 5-SECTION
1	EACH	SIGNAL HEAD, 2-FACE, 3-SECTION
2	EACH	SIGNAL HEAD, 2-FACE, 1-3 SECTION, 1-5 SECTION
6	EACH	PEDESTRIAN SIGNAL HEAD, 1-FACE
6	EACH	PEDESTRIAN PUSH-BUTTON
2	EACH	ALUMINUM MAST ARM AND POLE
6	EACH	TRAFFIC SIGNAL POST
1	EACH	SERVICE INSTALLATION

GHA GEWALT HAMILTON ASSOCIATES, INC.
850 Forest Edge Drive • Vernon Hills, IL 60061
Consulting Engineers & Surveyors
847.478.9700
FAX: 847.478.9701

THE TRAFFIC SIGNAL CONTROL EQUIPMENT FOR THIS PROJECT SHALL BE "ECONOLITE" TO MATCH THE EXISTING ADJACENT SYSTEM.

TRAFFIC SIGNAL LEGEND

	EXISTING
COMBINATION CURB AND GUTTER REMOVAL	
COMBINATION CONCRETE CURB & GUTTER	
EXISTING BRICK PAVERS	
SIDEWALK REMOVAL	

GHA #4085.879

FILE NAME = 4085.879-TR1.dwg	USER NAME = ZACH WALLSTEN	DESIGNED - JRD	REVISED -	STATE OF ILLINOIS DEPARTMENT OF TRANSPORTATION	TEMPORARY TRAFFIC SIGNAL INSTALLATION & REMOVE EXISTING TRAFFIC SIGNAL EQUIPMENT ILL ROUTE 58 (GOLF ROAD) AT DEE ROAD	F.A.P. RTE.	SECTION	COUNTY	TOTAL SHEETS	SHEET NO.
		DRAWN - ZCW	REVISED -			339	2011-211-TS	COOK	26	11
	PLOT SCALE = 1" = .0833'	CHECKED - KLB	REVISED -					CONTRACT #:	60R51	
	PLOT DATE = 2/1/2012	DATE - 2/1/2012	REVISED -		SCALE: 1"=20' SHEET NO. OF SHEETS STA. TO STA.			ILLINOIS FED. AID PROJECT		