ONYX PARKWAY RT STA. 228+84.39
AQUAMARINE DRIVE RT STA. 219+10.00
PELLEY ROAD STA. 106+08.29 - 108+86.82
SEMINOLE AVENUE STA. 50+30.00 - 51+30.83
PRAIRIE ROAD STA. 9+90.00 - 11+03.92

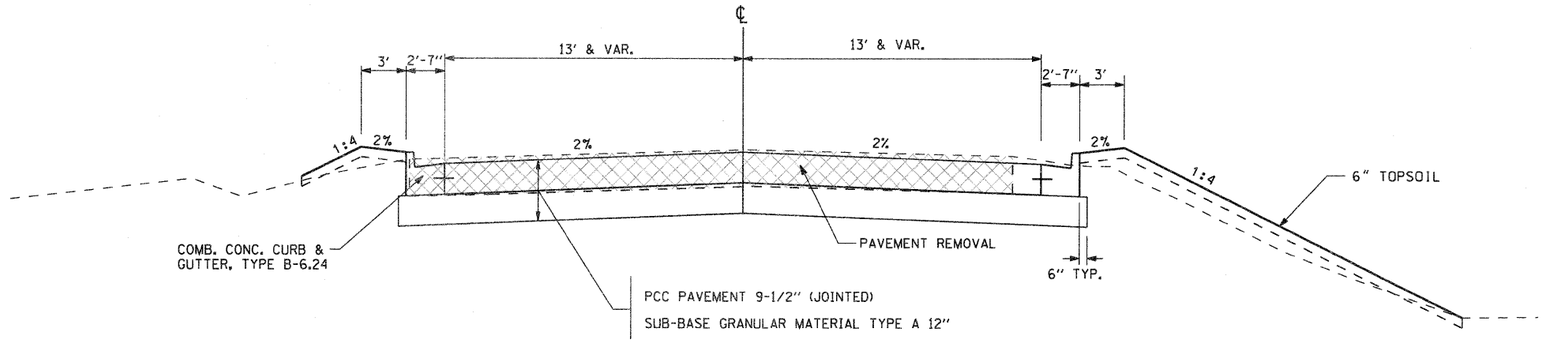

S. MAIN STREET HAMMERHEADS
RT STA. 222+81.6 - 223+90.4
RT STA. 224+06.5 - 224+41.6

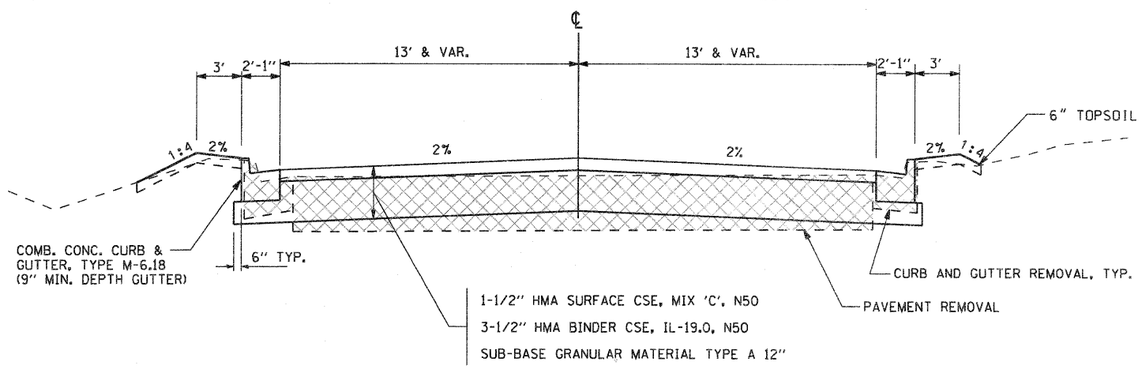

SOUTHROCK DRIVE LT STA. 270+25
SAUK LANE LT STA. 282+50
IROQUOIS AVENUE RT STA. 282+75

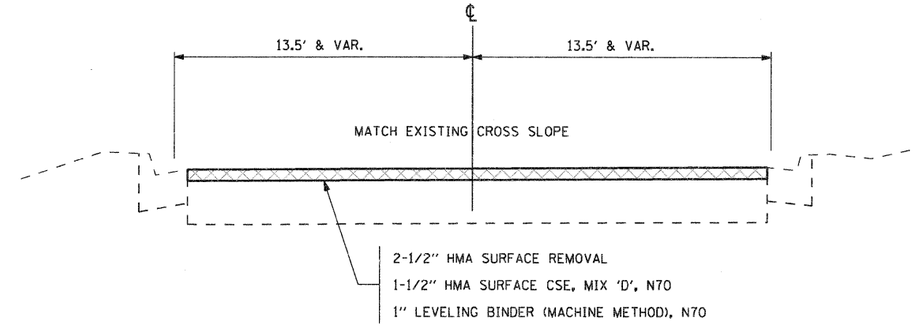

S. MAIN STREET OVERLAY
RT STA. 218+95.00 - 222+81.60 (IL 2 MAINLINE STATIONING)
RT STA. 224+41.60 - 228+47.90 (IL 2 MAINLINE STATIONING)

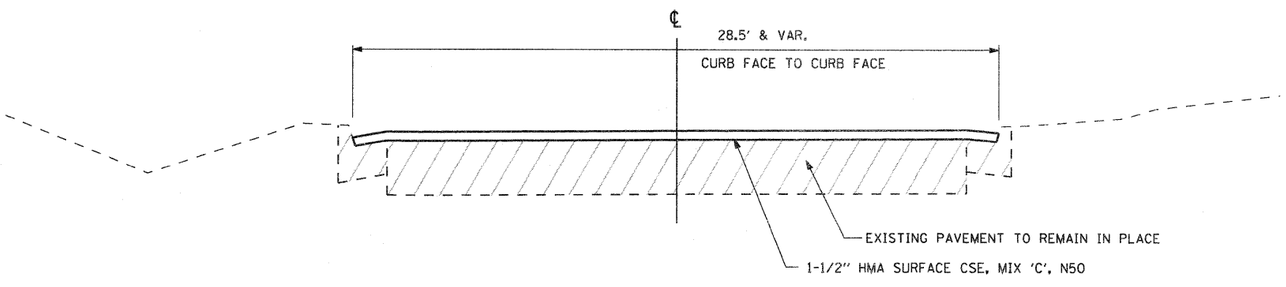

FAITH CENTER PARKING LOT
LT STA. 231+81.09

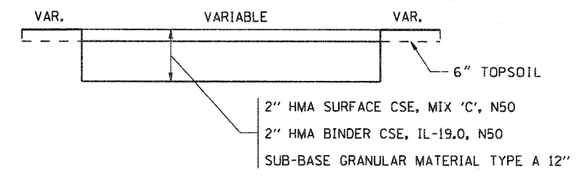

HMA MIXTURE APPLICATION RATE = 112 LB/SY/IN

FILE NAME = G:\2010\TRANS\B10T001\DGN\Typicals\D81502-Typical.dgn	USER NAME = patp	DESIGNED -	REVISED -	STATE OF ILLINOIS DEPARTMENT OF TRANSPORTATION	FAP 742 (IL 2) TYPICAL SECTIONS	F.A.P. RTE. 734	SECTION 34R	COUNTY WINNEBAGO	TOTAL SHEETS 491	SHEET NO. 27
	PLOT SCALE = 10.0000 ' / IN.	DRAWN -	REVISED -					CONTRACT NO. 64515		
	PLOT DATE = 1/25/2012	CHECKED -	REVISED -							
		DATE -	REVISED -		SCALE: N/A SHEET NO. OF SHEETS STA. TO STA.		ILLINOIS	FED. AID PROJECT		