SPRINGFIELD AVENUE
STA. 24+65.00 - STA. 28+49.32

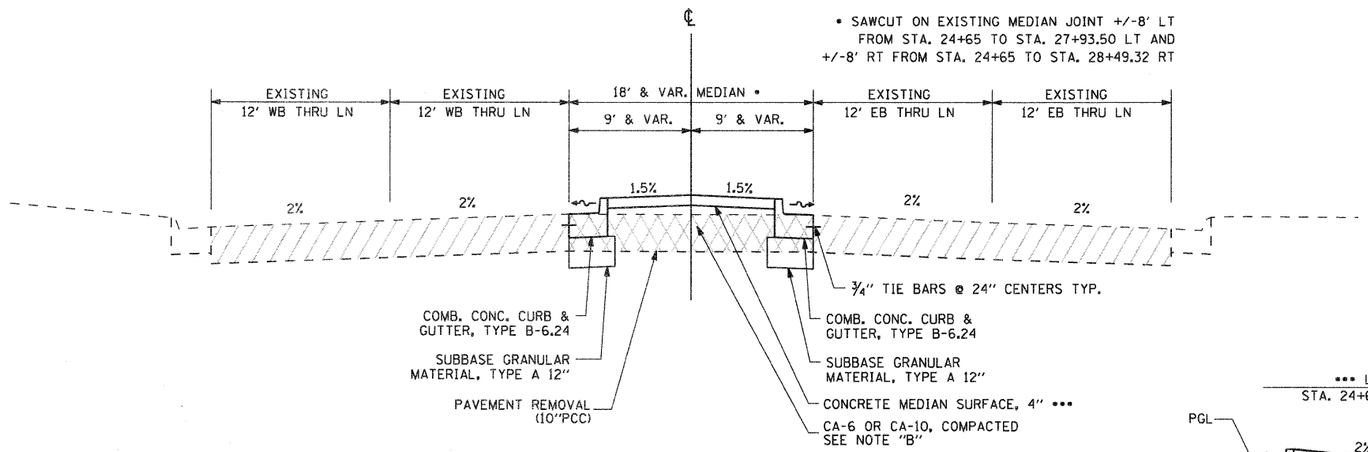

•• CONCRETE MEDIAN TYPE SB-6 SPECIAL
STA. 29+03.21 - STA. 32+60.50

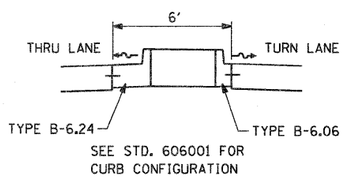

••• LANDSCAPED MEDIAN
STA. 24+65.00 TO STA. 28+04.36

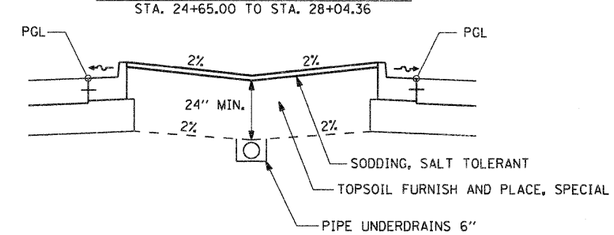

SPRINGFIELD AVENUE
STA. 28+49.32 - STA. 32+00.00

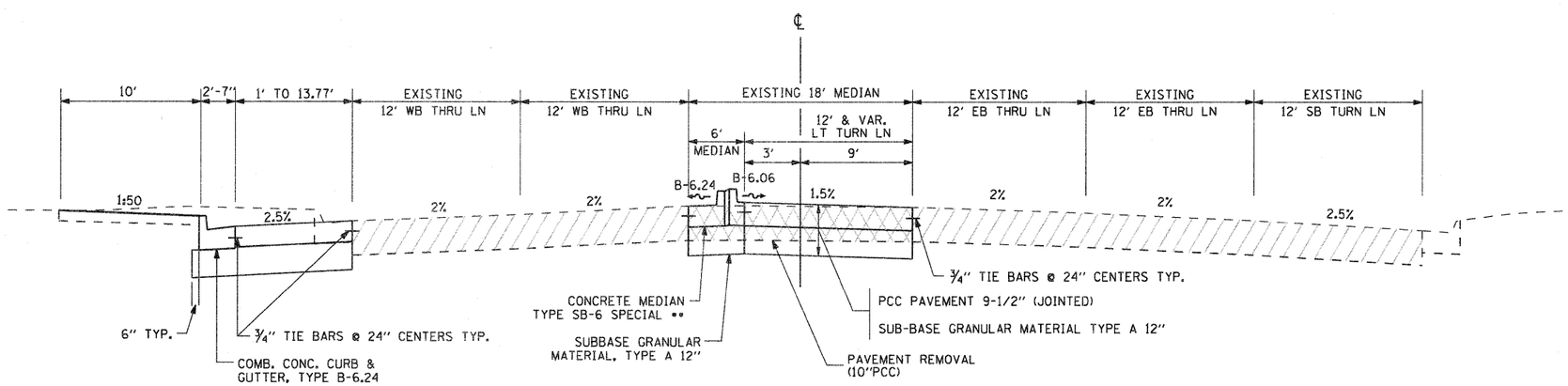

NOTE "B"
THE COST OF THE CA-6 OR CA-10 IS TO BE INCLUDED IN THE COST OF EACH TYPE OF MEDIAN

FILE NAME = G:\2010\TRANS\B10T001\DGN\Typicals\D01502-Typical.dgn	USER NAME = petp	DESIGNED -	REVISED -	STATE OF ILLINOIS DEPARTMENT OF TRANSPORTATION	FAP 742 (IL 2) TYPICAL SECTIONS	F.A.P. RTE.	SECTION	COUNTY	TOTAL SHEETS	SHEET NO.
		DRAWN -	REVISED -			734	34R	WINNEBAGO	491	29
	PLOT SCALE = 10.0000 ' / IN.	CHECKED -	REVISED -					CONTRACT NO. 64515		
	PLOT DATE = 1/25/2012	DATE -	REVISED -		SCALE: N/A SHEET NO. OF SHEETS STA. TO STA.		ILLINOIS FED. AID PROJECT			