NOTE:

1. CONTRACTOR SHALL HAVE OPTION OF PLACING STANDARD MANHOLES IN LIEU OF FLAT SLAB TOPS WHERE CONDITIONS PERMIT.
2. RIM ELEVATIONS & OFFSETS FOR DRAINAGE STRUCTURES CONSTRUCTED IN CONJUNCTION WITH GUTTER OR CURB & GUTTER ARE CALLED OUT TO THE EDGE OF PAVEMENT. ALL OTHER DRAINAGE STRUCTURES ARE CALLED OUT TO THE CENTER OF STRUCTURE.
3. WHERE PROPOSED DRAINAGE STRUCTURES ARE TO BE CONNECTED TO EXISTING STORM SEWERS AND PIPE CULVERTS, THE COST FOR PROVIDING THE CONNECTION SHALL BE INCLUDED IN THE COST OF THE ASSOCIATED DRAINAGE STRUCTURE PAY ITEMS.

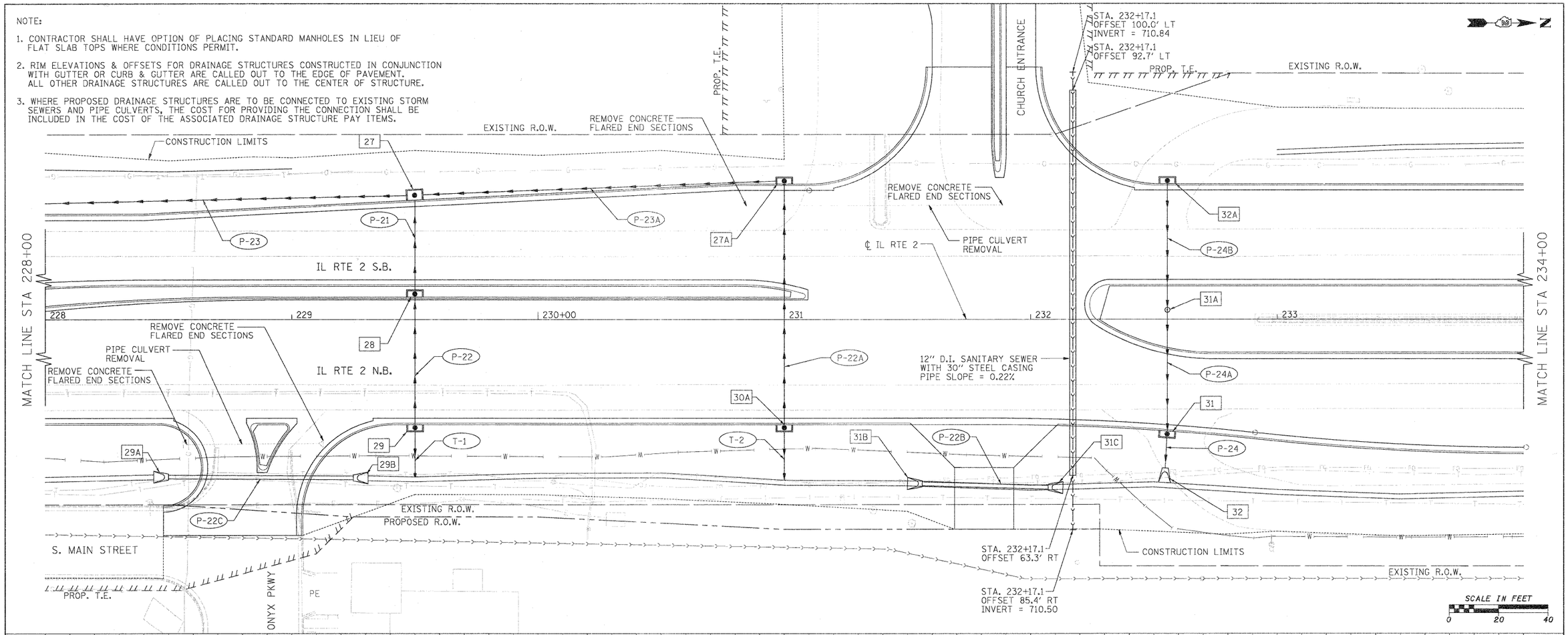

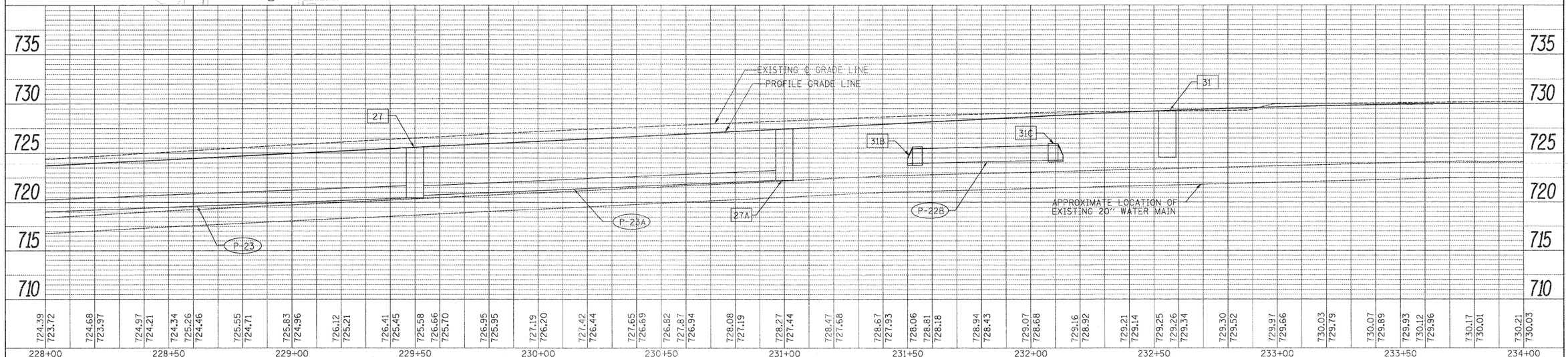

PLAN: SURVEYED / PLOTTED / ALIGNMENT CHECKED / RT. OF WAY CHECKED / CADD FILE NAME / NOTE BOOK / NO. / BY / DATE

PROFILE: SURVEYED / PLOTTED / GRADES CHECKED / B.M. NOTED / STRUCTURE NOTAT'NS CHKD / NOTE BOOK / NO. / BY / DATE

FILE NAME = $FILEL$	USER NAME = $USER$	DESIGNED - GE	REVISED -
		DRAWN - GE	REVISED -
	PLOT SCALE = $SCALE$	CHECKED - SL	REVISED -
	PLOT DATE = $DATE$	DATE - 05/2011	REVISED -

STATE OF ILLINOIS
DEPARTMENT OF TRANSPORTATION

FAP 742 (IL 2)
PROPOSED DRAINAGE PLAN AND PROFILE

SCALE: 1" = 20' | SHEET NO. 03 OF 30 SHEETS | STA. 228+00 TO STA. 234+00

F.A.P. RTE.	SECTION	COUNTY	TOTAL SHEETS	SHEET NO.
742	34R	WINNEBAGO	491	196

CONTRACT NO. 64515

ILLINOIS FED. AID PROJECT