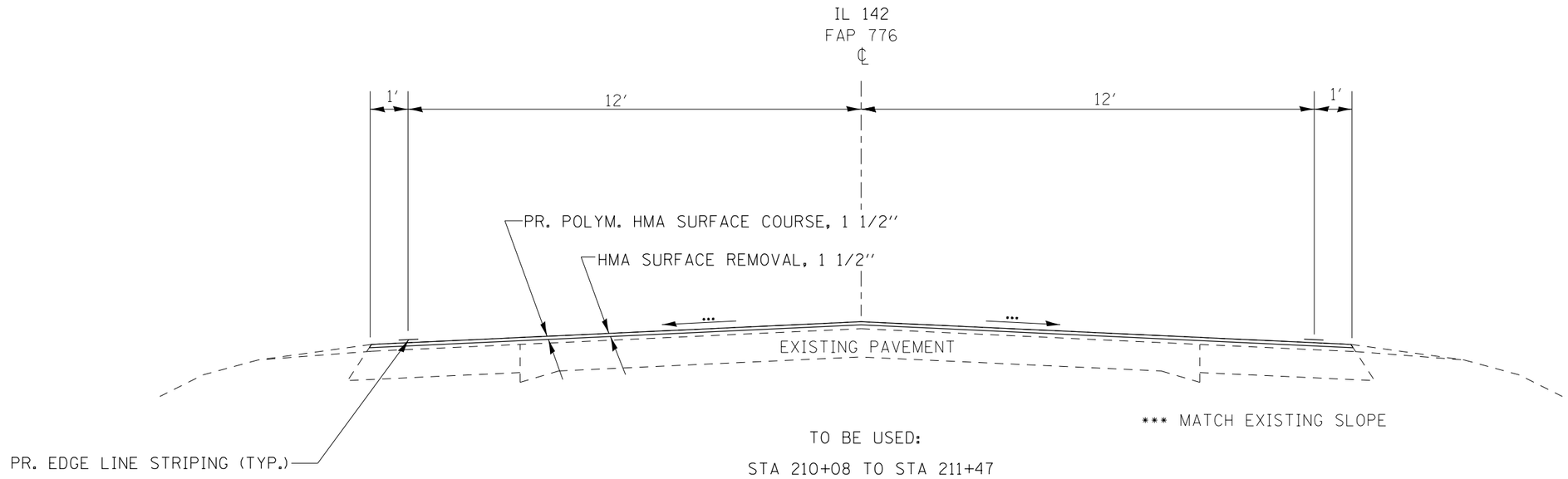

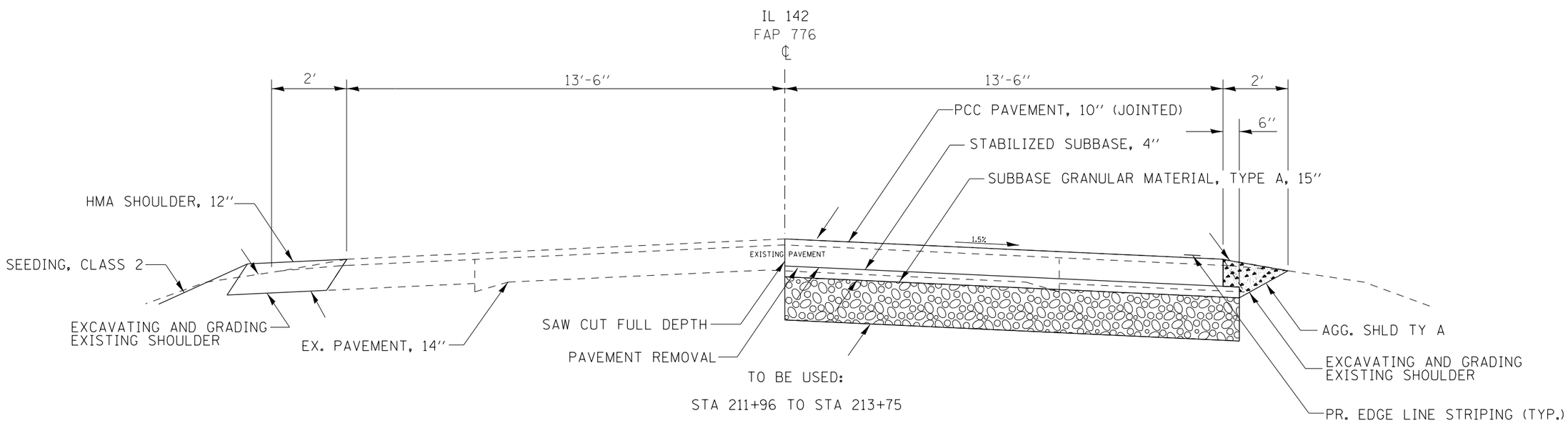

NOTE: THE ACTUAL EXISTING PAVEMENT THICKNESS VARIES FROM 12 1/2" TO 14 1/2"

FILE NAME = c:\pw_work\pwidot\lavenderba\d0290964\78291-sht-plan.dgn	USER NAME = $USER$	DESIGNED -	REVISED -	STATE OF ILLINOIS DEPARTMENT OF TRANSPORTATION	TYPICAL SECTIONS	F.A.P RTE. 776	SECTION 125R-1	COUNTY SALINE	TOTAL SHEETS 16 / SHEET NO. 8
	PLOT SCALE = 100.0000 ' / in.	DRAWN -	REVISED -					CONTRACT NO. 78291	
	PLOT DATE = 4/5/2012	CHECKED -	REVISED -						
		DATE -	REVISED -		SCALE: SHEET 1 OF 2 SHEETS STA. TO STA.		ILLINOIS FED. AID PROJECT		