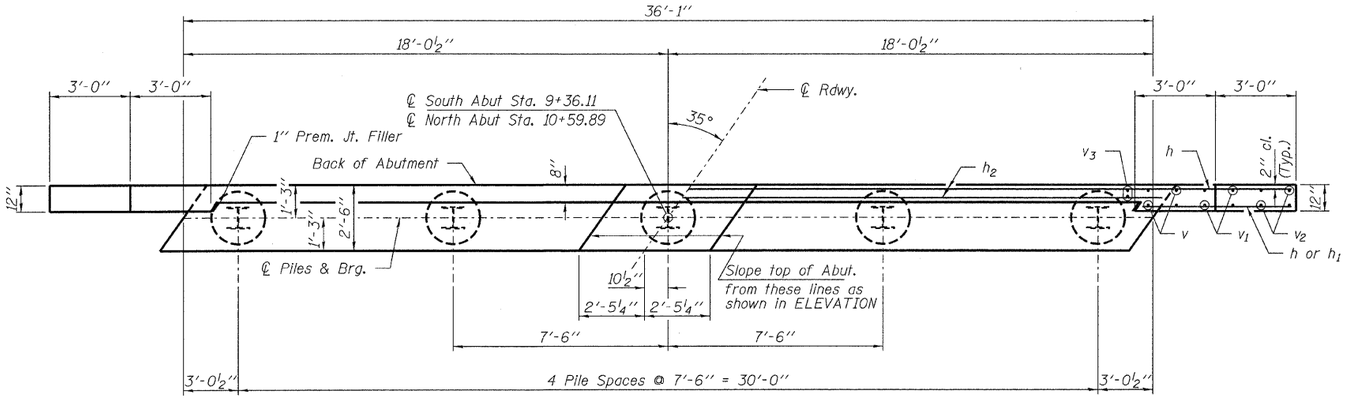

PLAN

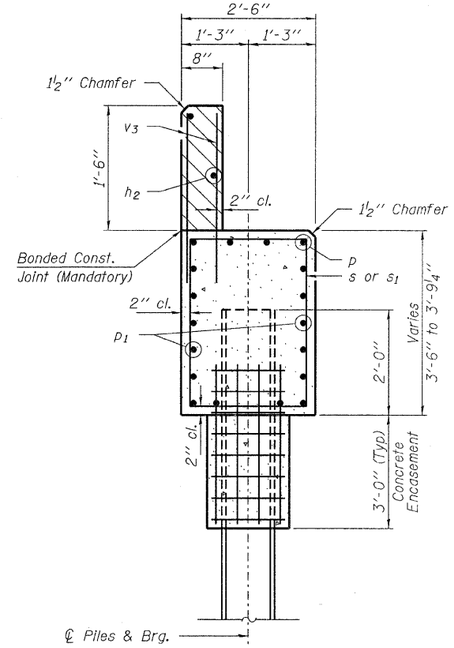

SECTION A-A

Hatched area to be poured after beams are in place.

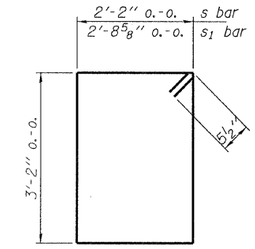

BAR s & s1

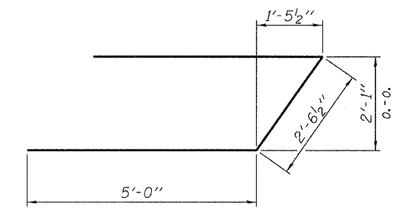

BAR u

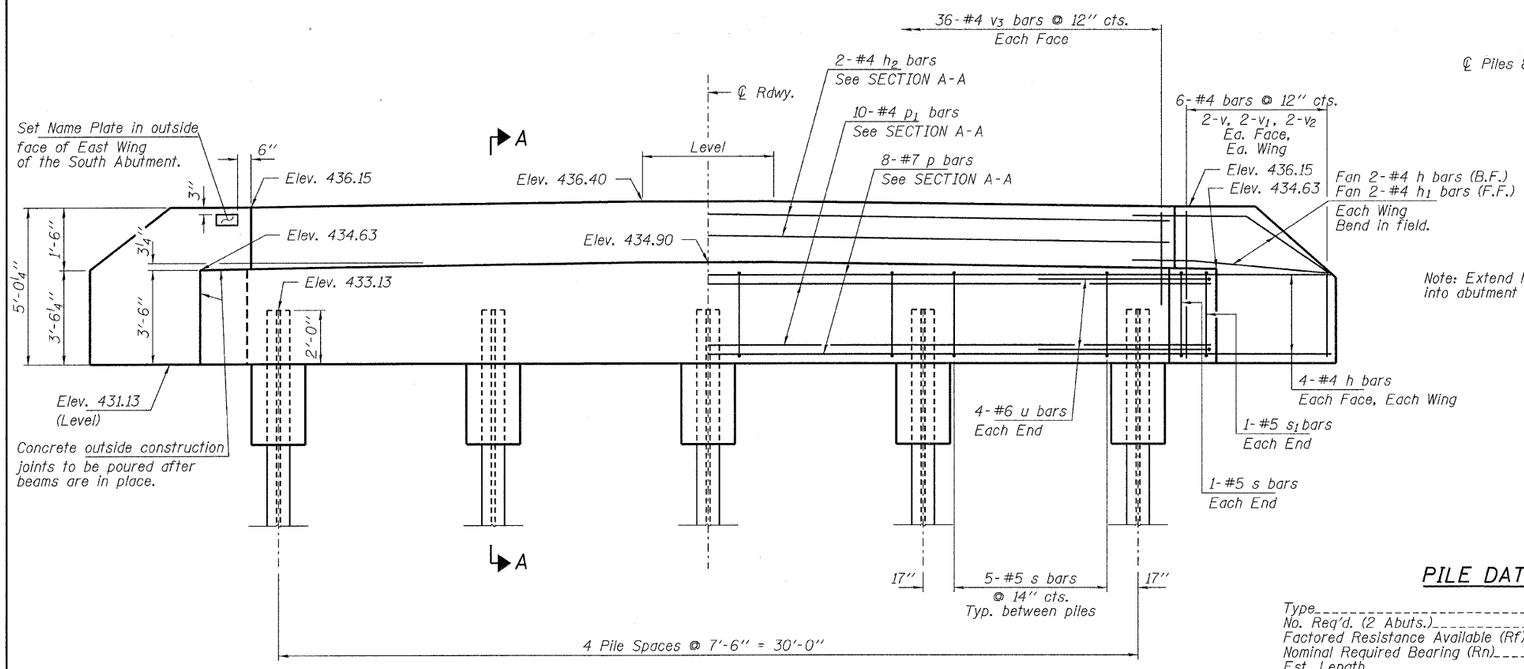

ELEVATION

PILE DATA

Type _____ Steel HP10x42
No. Req'd. (2 Abuts.) _____ 10
Factored Resistance Available (Rf) ___ 184 Kips/Pile
Nominal Required Bearing (Rn) _____ 335 Kips/Pile
Est. Length _____ 40 Ft/Pile

BILL OF MATERIAL - 2 ABUTS.

BAR	NO.	SIZE	LENGTH	SHAPE
h	40	#4	7'-3"	
h1	8	#4	5'-9"	
h2	4	#4	35'-9"	
p	16	#7	35'-9"	
p1	20	#4	35'-9"	
s	44	#5	11'-7"	
s1	4	#5	12'-8"	
u	16	#6	12'-7"	
v	16	#4	4'-8"	
v1	16	#4	4'-3"	
v2	16	#4	3'-3"	
v3	144	#4	2'-10"	
Concrete Structures			Cu. Yd.	30.6
Concrete Encasement			Cu. Yd.	3.4
Reinforcement Bars			Pound	3,260
Steel Piles HP10x42			Foot	400
Name Plates			Each	1

FILE NAME = 100238-sht-bridge.dgn	USER NAME =	DESIGNED - J.W.F.	REVISED -
HAMPTON, LENZINI AND RENWICK, INC. 3065 STEVENSON DRIVE, SUITE 201 SPRINGFIELD, ILLINOIS 62703		CHECKED - S.W.M.	REVISED -
	PLOT SCALE =	DRAWN - D.T.M.	REVISED -
ILLINOIS PROFESSIONAL DESIGN FIRM LB / PE / SE CORP. 184.000839	PLOT DATE = 3/1/2012	CHECKED - S.W.M.	REVISED -

STATE OF ILLINOIS
JEFFERSON COUNTY HIGHWAY DEPARTMENT

ABUTMENTS
STRUCTURE NO. 041-3750
SHEET NO. 8 OF 11 SHEETS

T.R.	SECTION	COUNTY	TOTAL SHEETS	SHEET NO.
364	10-04106-00-BR	JEFFERSON	27	24
DODDS ROAD DISTRICT		CONTRACT NO. 99472		
		ILLINOIS FED. AID PROJECT BROS-008(067)		