STATE OF ILLINOIS
DEPARTMENT OF TRANSPORTATION

ROUTE NO.	SECTION	COUNTY	TOTAL SHEETS	SHEET NO.
FAI 90/94	*	COOK	344	249
FED. ROAD DIST. NO.		ILLINOIS	FED. AID PROJECT=	

SHEET NO. 6
9 SHEETS

* 2003-029I
Contract #62581

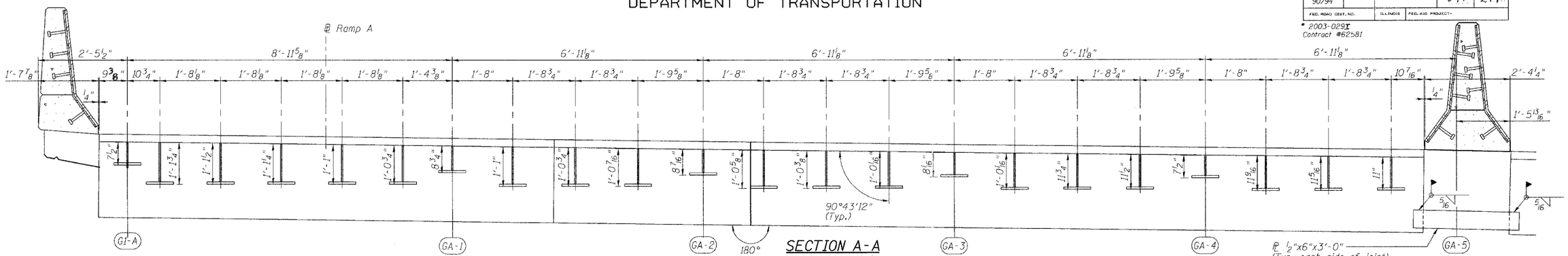

SECTION A-A
(Dimensions are along ℄ Pier)

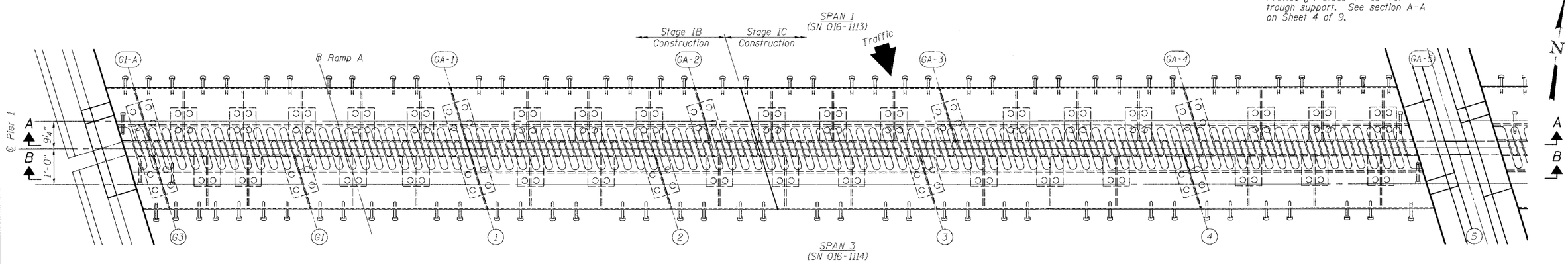

PLAN OF FINGER PLATE AT PIER 1 RAMP A (SOUTHBOUND)

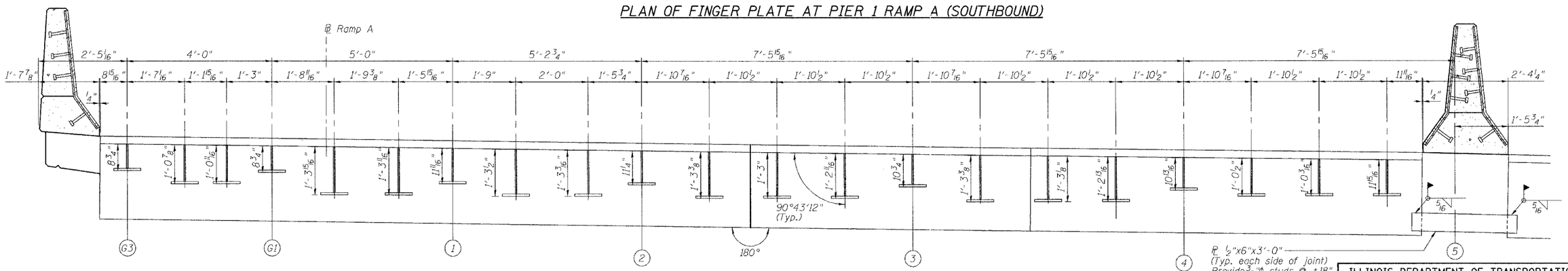

SECTION B-B
(Dimensions are along ℄ Pier)

REVISIONS	
NAME	DATE

ILLINOIS DEPARTMENT OF TRANSPORTATION

FINGER PLATE PLAN AND ELEVATION

F.A.I. ROUTE 90/94 SOUTHBOUND (DAN RYAN EXPRESSWAY)
OVER SOUTH BRANCH - CHICAGO RIVER
COOK COUNTY
S.N. 016-1113 - PIER 1

SCALE: VERT.
HORIZ.
DATE: 4/7/05

DRAWN BY: LANDREY
DESIGNED BY: SANFORD
CHECKED BY: MATHUR

GREENE & BRADFORD, INC.
(OF SPRINGFIELD)
CONSULTING ENGINEERS
550 CONSTITUTION DRIVE
SPRINGFIELD, ILLINOIS 62711
PHONE: (217) 726-9494 FAX: (217) 726-9495
PROFESSIONAL & STRUCTURAL ENGINEERING CORPORATION
(217) 726-9494, (217) 726-9277 FILE MAIL: design@greenebradford.com

COMPUTER FILE NO.
04286-W01-SB-PEI

PROJECT 04286-W01
5/11/06-MML

FILE NAME = J:\04286\W01\DRAWINGS\Southbound\04286-W01-SB-PEI.dgn
PLOT SCALE = 1:1
PLOT DATE = 5/16/2006
PLOT TIME = 2:28:36 PM
OPERATOR = mitchellel