CONTRACT NO. 62712

F.A.U RTE.	SECTION	COUNTY	TOTAL SHEETS	SHEET NO.
3578	1327B	COOK	108	20
STA. 1511+00.00		TO STA.1522+00.00		
FED. ROAD DIST. NO. 1	ILLINOIS	FED. AID PROJECT		

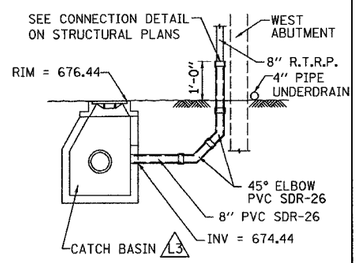

ELEVATION VIEW

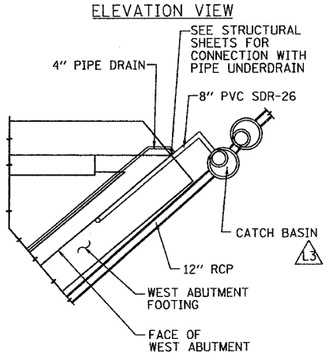

PLAN VIEW

BRIDGE DRAINAGE SYSTEM CONNECTION TO UNDERGROUND DRAINAGE SYSTEM

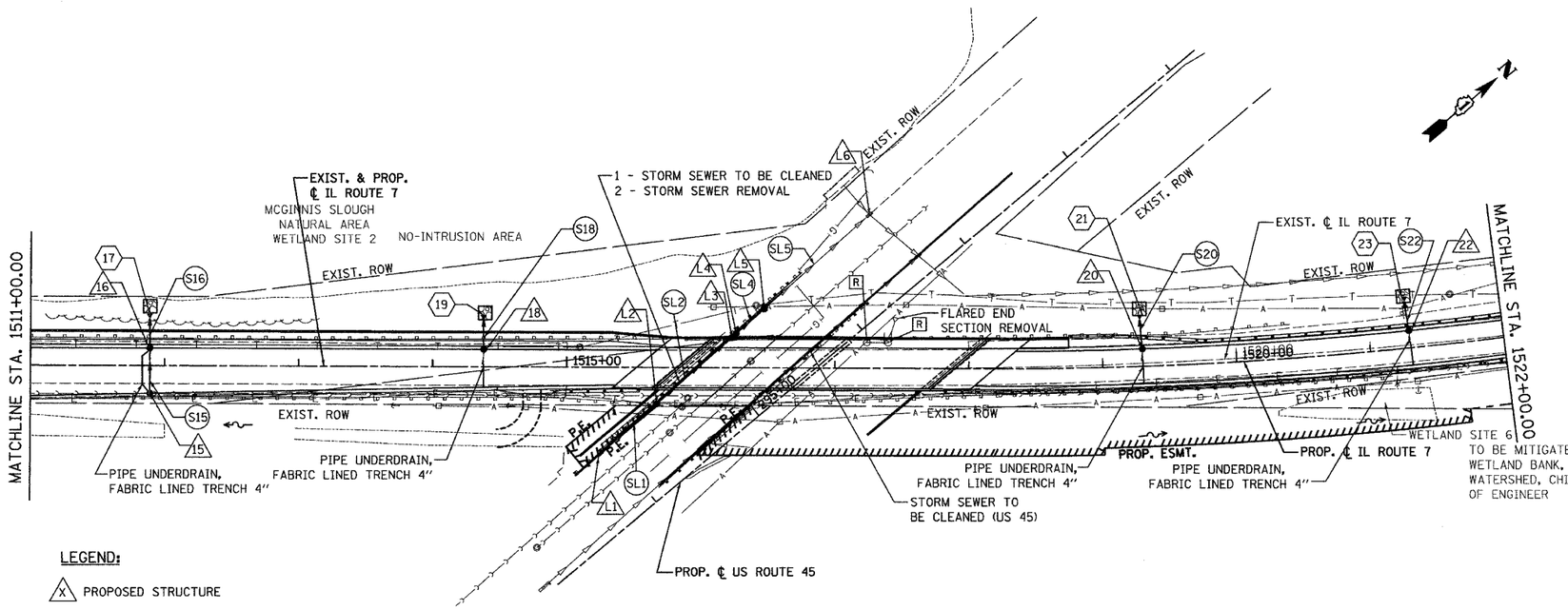

LEGEND:

- (X) PROPOSED STRUCTURE
- (SX) PROPOSED PIPE
- (X) PROPOSED FLARED END SECTION

NOTE:

1. FOR STRUCTURE AND PIPE TABLES SEE DRAINAGE TABLE SHEET
2. IF THE STORM SEWER SYSTEM BETWEEN STA. 1508+00 AND STA. 1515+00 WILL BE INSTALLED PRIOR TO THE FILL PLACEMENT, THEN THE SEWER LATERALS ARE TO BE INSTALLED AFTER THE SETTLEMENT WAITING PERIOD IS COMPLETED, AS DIRECTED BY THE ENGINEER.
3. DRAINAGE STRUCTURES CROSSING THE NORTHWEST RETAINING WALL SHALL BE INSTALLED AFTER STONE COLUMN INSTALLATION IS COMPLETED. (SEE RETAINING WALL PLANS)
4. IN AREAS WHERE STONE COLUMNS ARE DISTURBED BY SEWER INSTALLATION, PROVIDE 12" OF TRENCH BACKFILL BELOW THE SEWER, SEE DRAINAGE TABLES.

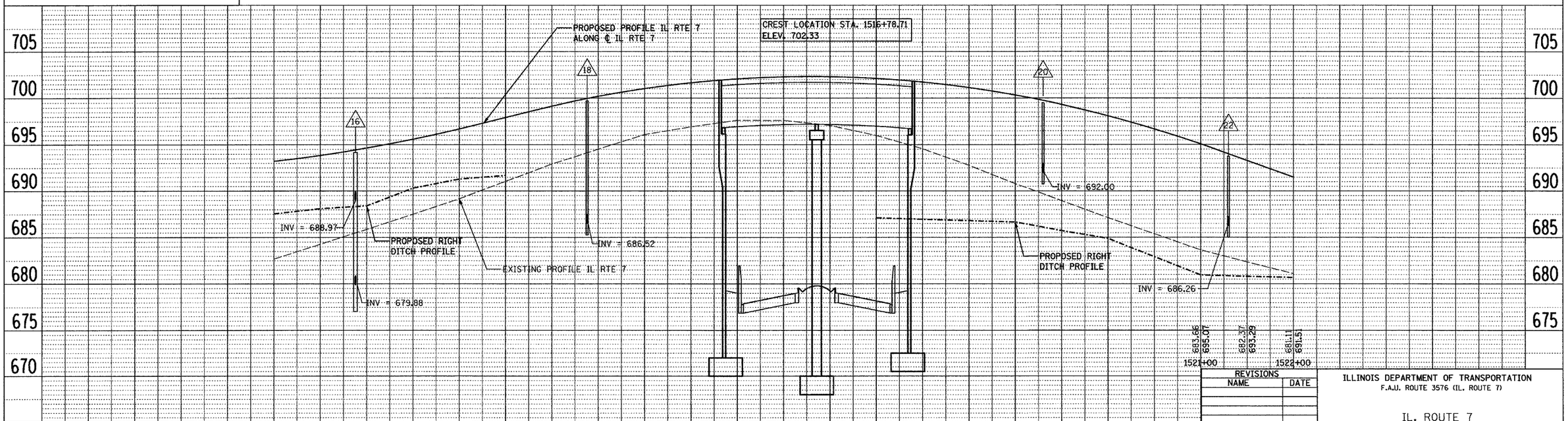

REVISIONS	
NAME	DATE

ILLINOIS DEPARTMENT OF TRANSPORTATION
F.A.U. ROUTE 3576 (IL. ROUTE 7)

IL. ROUTE 7
DRAINAGE AND UTILITIES SHEETS
STA. 1511+00.00 TO STA. 1522+00.00

SCALE: VERT. 1" = 5'
HORIZ. 1" = 50'
DATE: MAR. 10, 2006

DRAWN BY BCD
CHECKED BY SLR

PLAN: SURVEYED / PLOTTED / ALIGN. OF WAY / CHECKED / CADD FILE NAME / NOTE BOOK / NO. / DATE / BY

PROFILE: SURVEYED / PLOTTED / ALIGN. OF WAY / CHECKED / CADD FILE NAME / NOTE BOOK / NO. / DATE / BY / STRUCTURE NOTATIONS CHKD

PLOT DATE = 3/8/2006
FILE NAME = W:\IL 7\Proposed_Plans\Plans&Profiles\DR.dgn
PLOT SCALE = $$SCALE$$
REFERENCE = $$REF$$